CONTROL DATA

CYBER 180

810 and 830 Computer Systems

Logic Diagrams
Volume 2 of 3
IOU and MEM

810 Computer System
810A Computer System
830 Computer System
830A Computer System

60469004

IOU PANEL

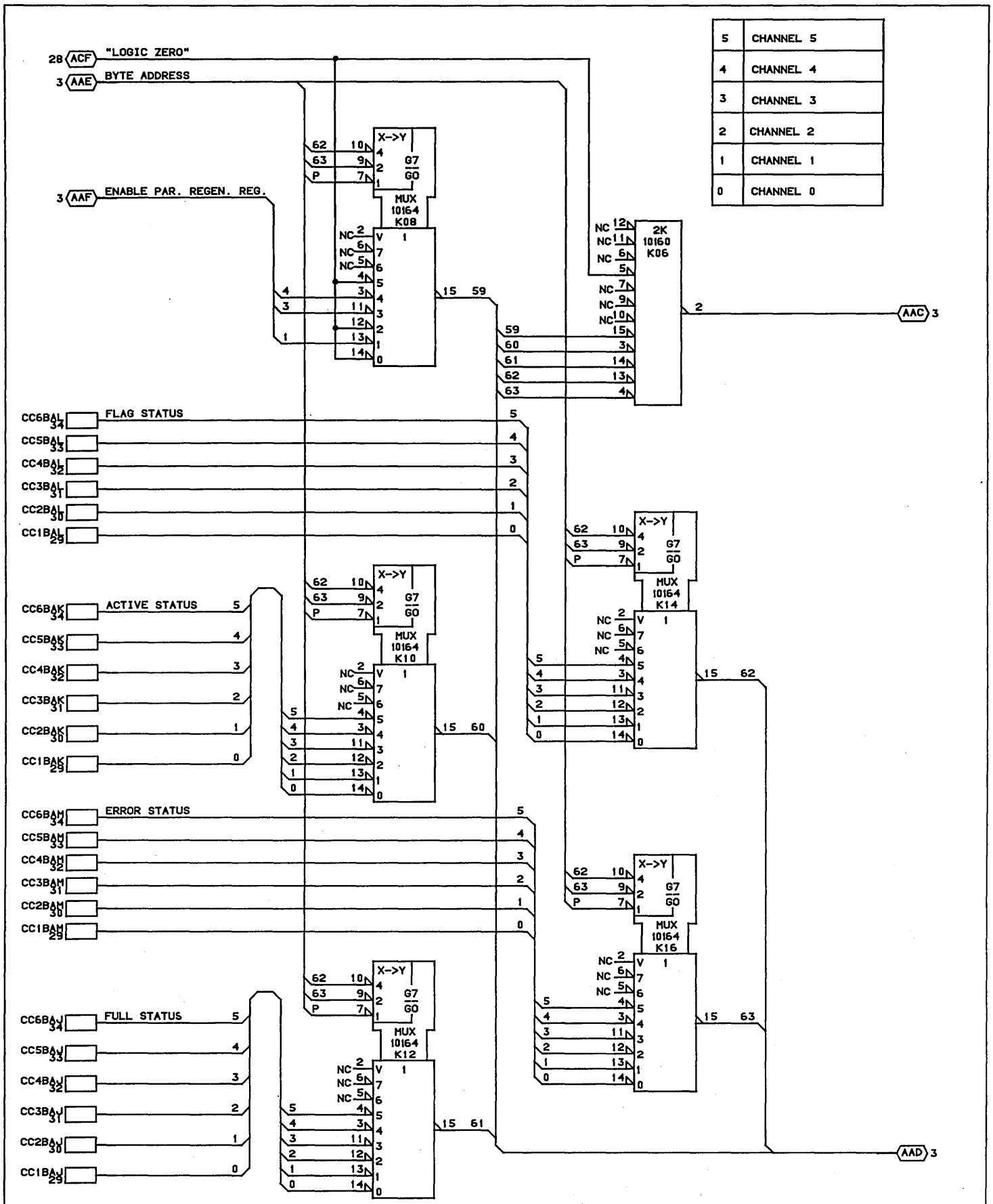

CONTROL DATA CANADA LTD	STATUS MUX TO MAC INTERFACE 210 PAK ASSEMBLY TYPE: 1CH0	C	A
		08-MAR-84	SHEET 02 LOC. D10

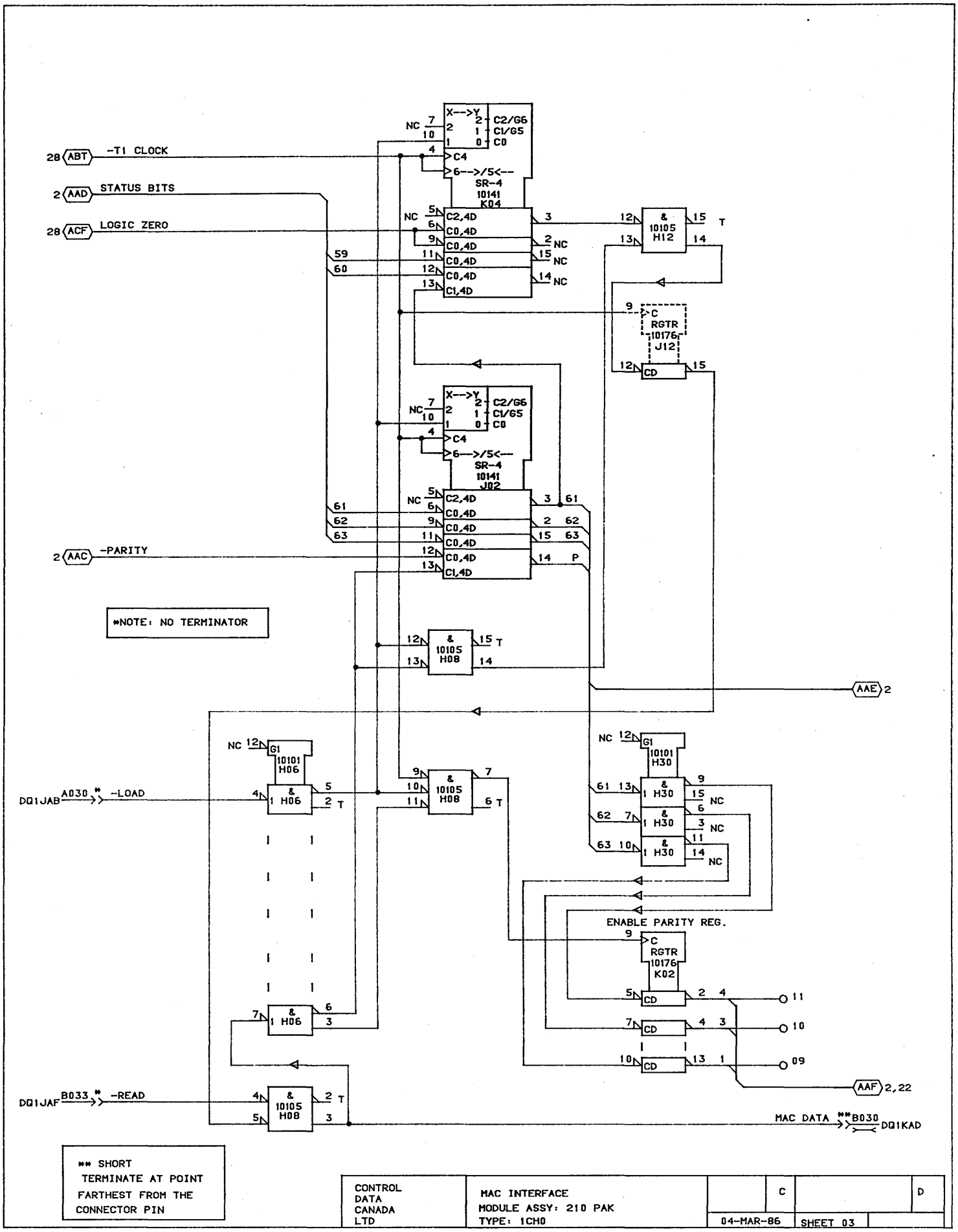

** SHORT
TERMINATE AT POINT
FARTHEST FROM THE
CONNECTOR PIN

CONTROL DATA CANADA LTD	MAC INTERFACE MODULE ASSY: 210 PAK TYPE: 1CH0		C		D
		04-MAR-86	SHEET 03		

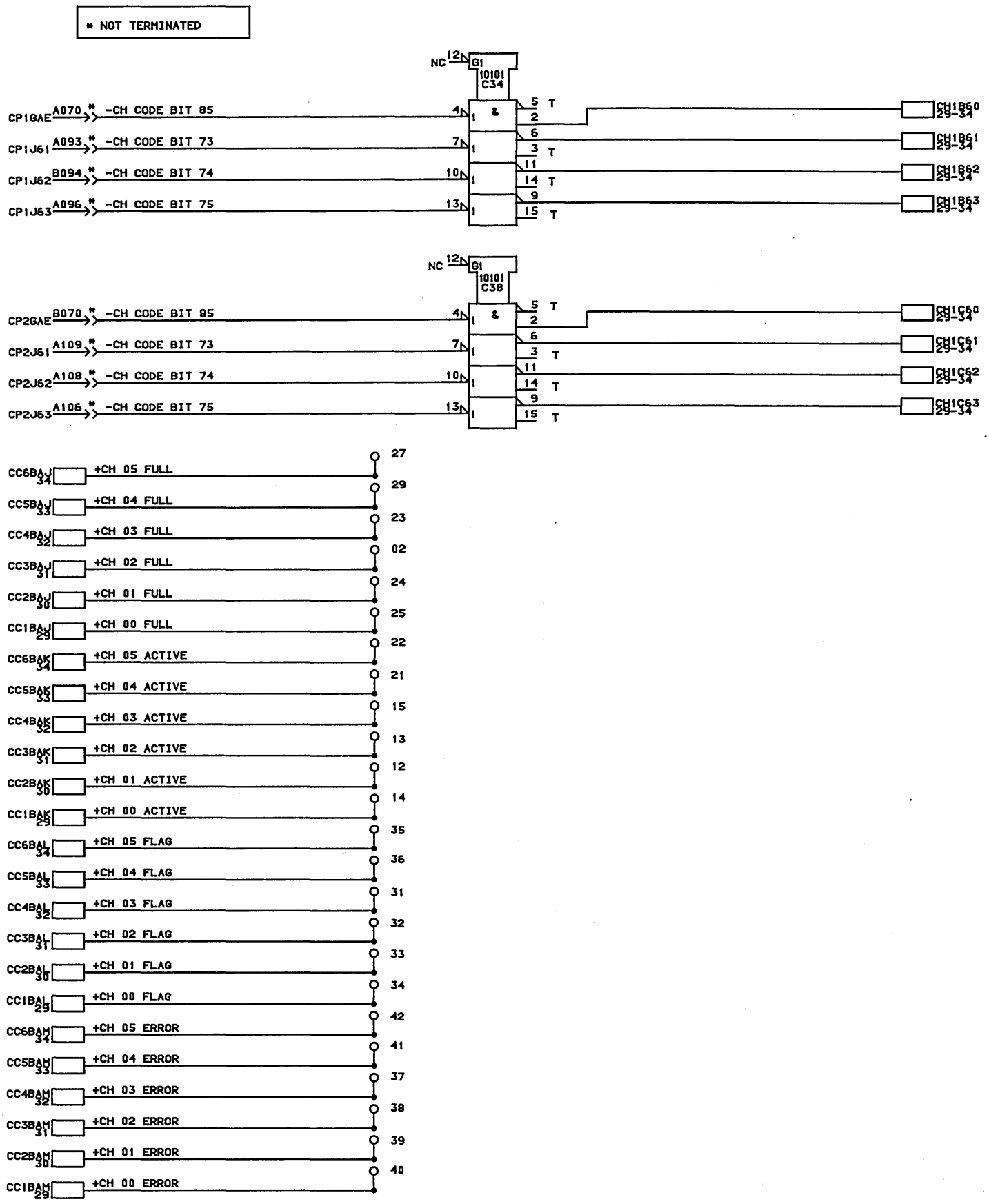

CONTROL DATA CANADA LTD	BBL 0,BBL 1 CHANNEL CODE MODULE ASSY: 210 PAK TYPE: 1CH0	C		A
		08-MAR-84	SHEET 04	LOC D10

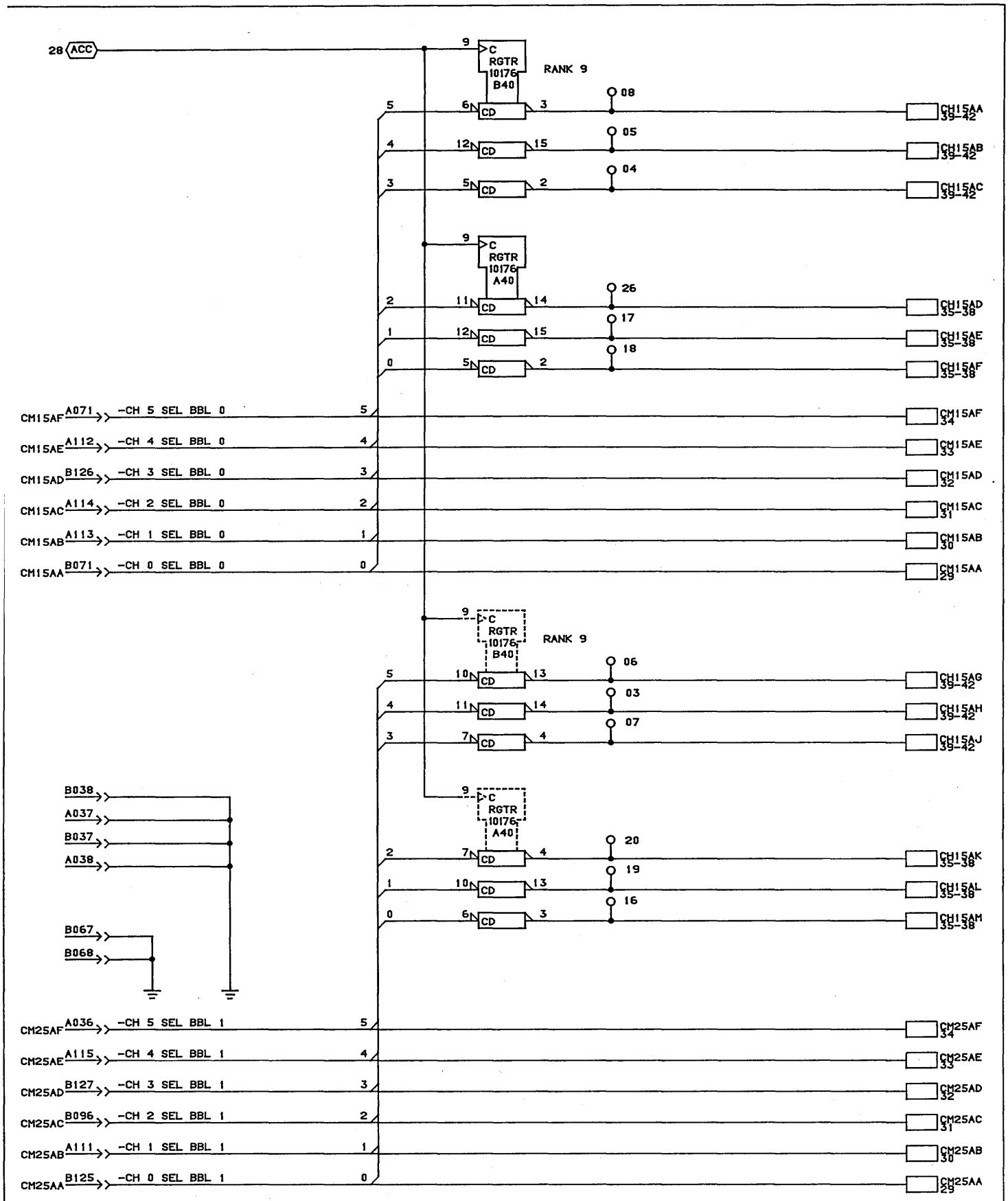

CONTROL DATA CANADA LTD	CHANNEL SELECTS BBL 0, BBL 1 210 PAK ASSEMBLY TYPE: 1CH0	C		A
		08-MAR-84	SHEET 05	LOC. D10

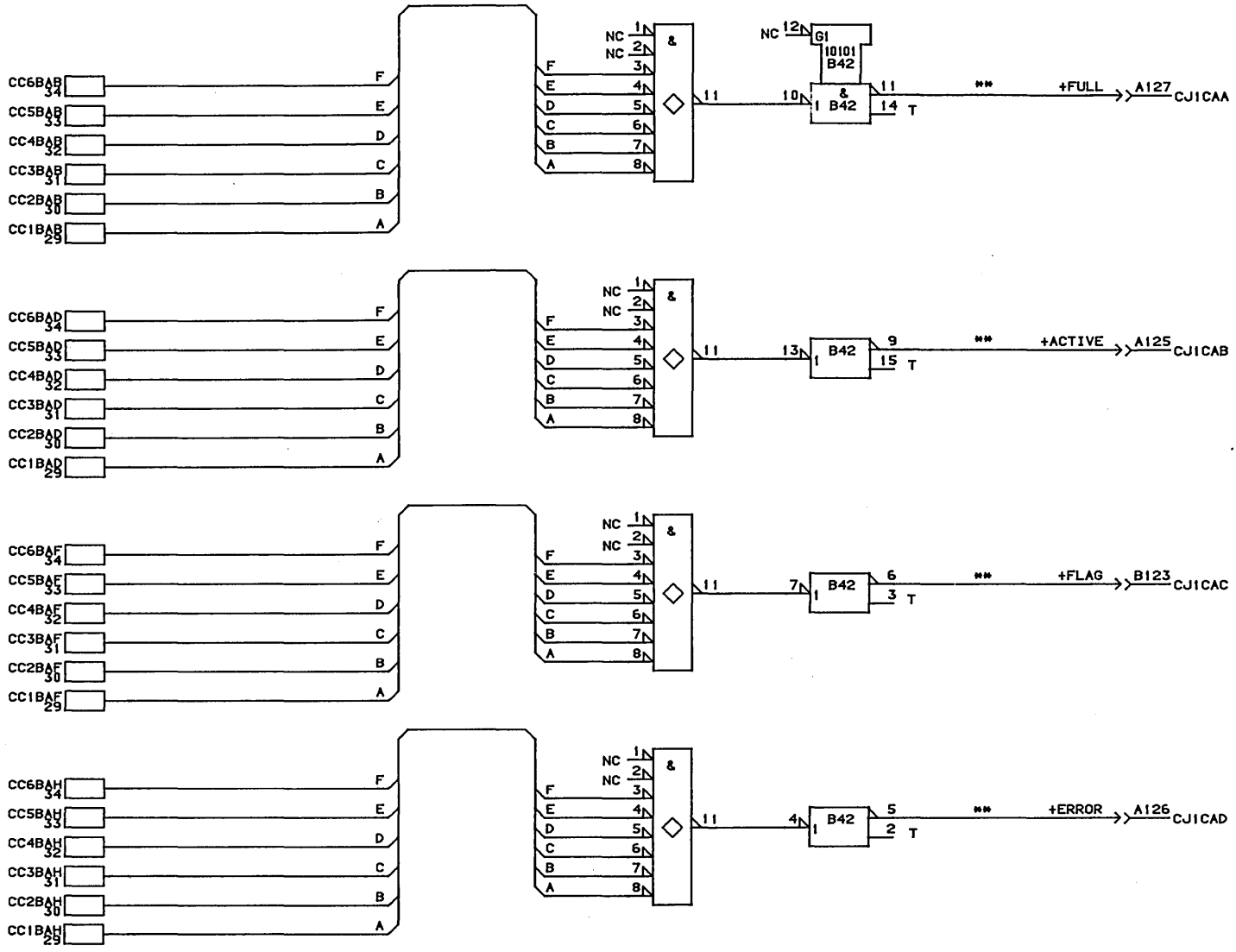

** SHORT LINES

CONTROL DATA CANADA LTD	CHANNEL STATUS BBL 0 MODULE ASSY:210 PAK TYPE: 1CH0	C		A
		14-MAR-84	SHEET 06	LOC. D10

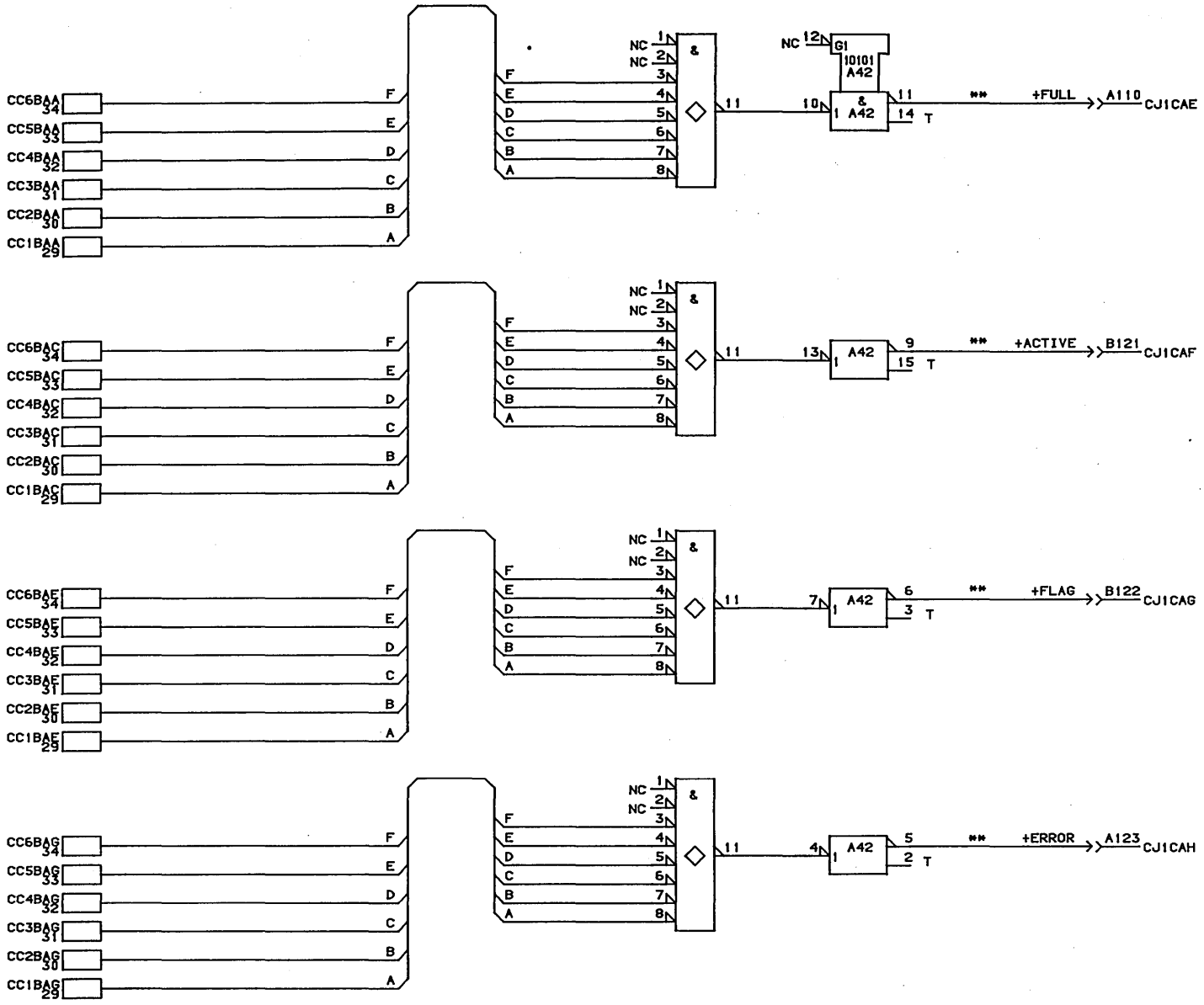

** SHORT LINES

CONTROL DATA CANADA LTD	CHANNEL STATUS BBL 1 MODULE ASSY:210 PAK TYPE: 1CH0	C		A
		14-MAR-84	SHEET 07	LOC. D10

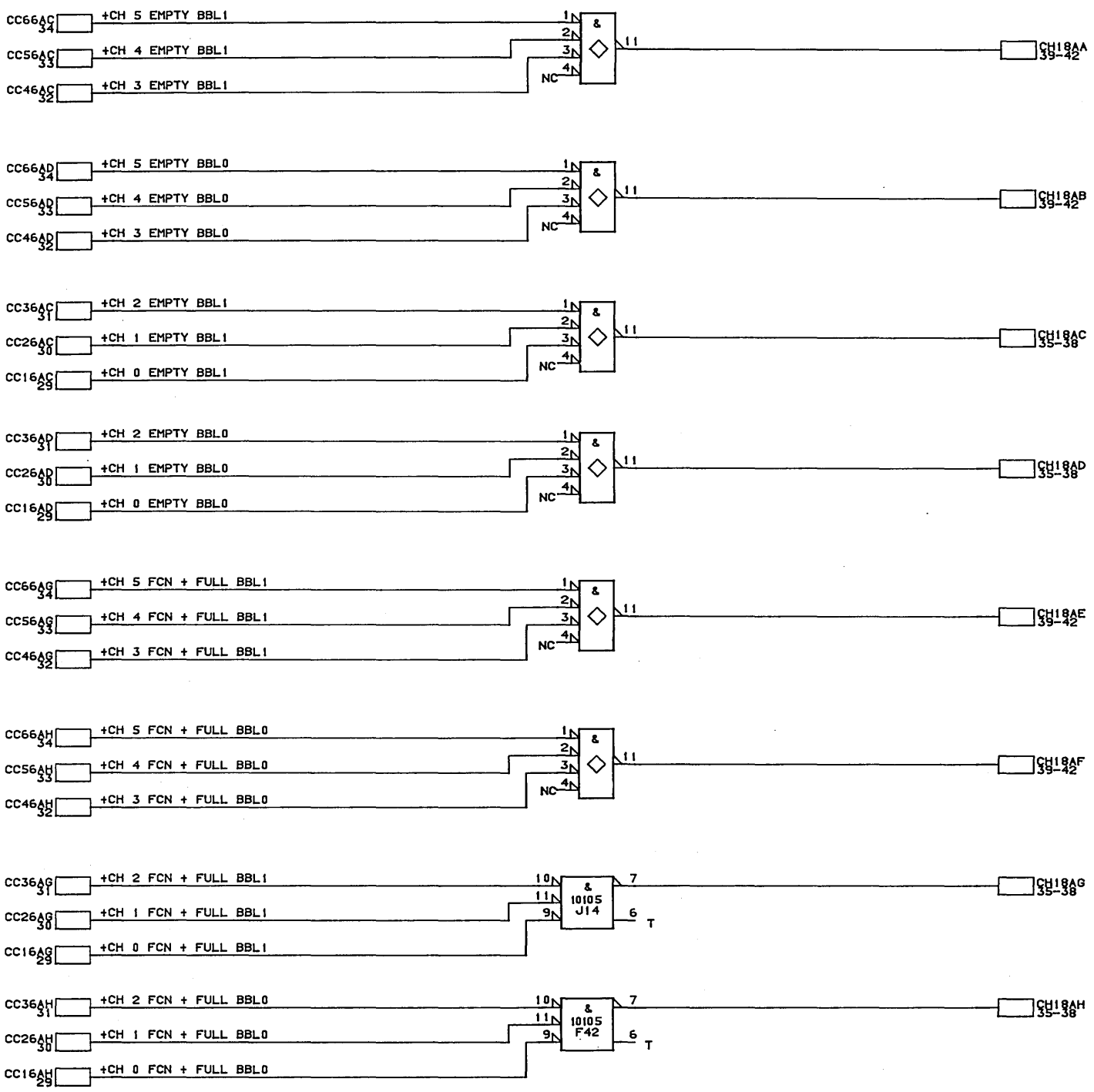

CONTROL DATA CANADA LTD	1CC0 TO 1CD0 CONTROL MODULE ASSY:210 PAK TYPE: 1CH0	C		A
		09-MAR-84	SHEET 08	LOC. D10

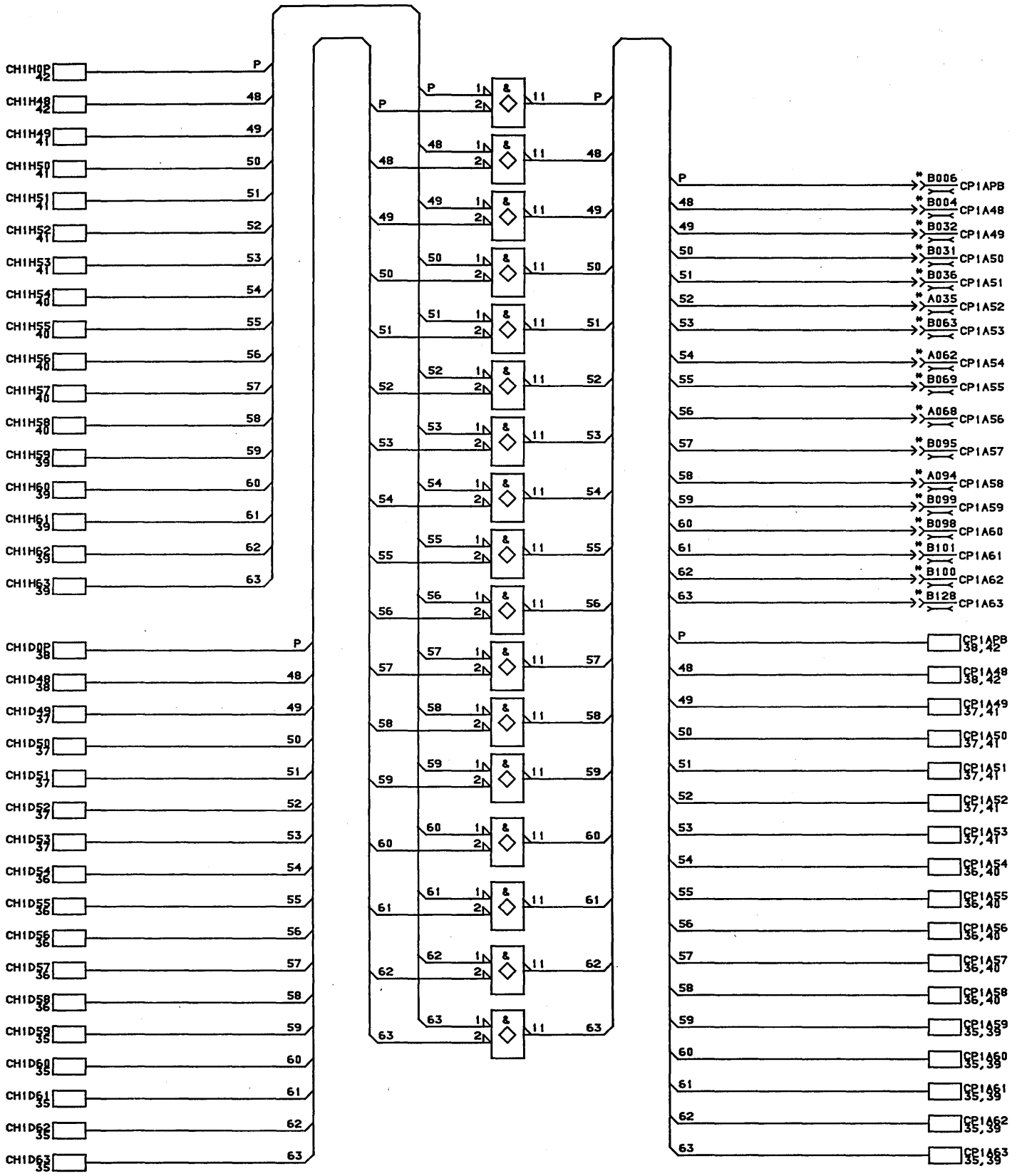

CONTROL DATA CANADA LTD	BBL 0 DATA BUS MODULE ASSY:210 PAK TYPE: 1CH0	C		A
		08-MAR-84	SHEET 09	LOC. D10

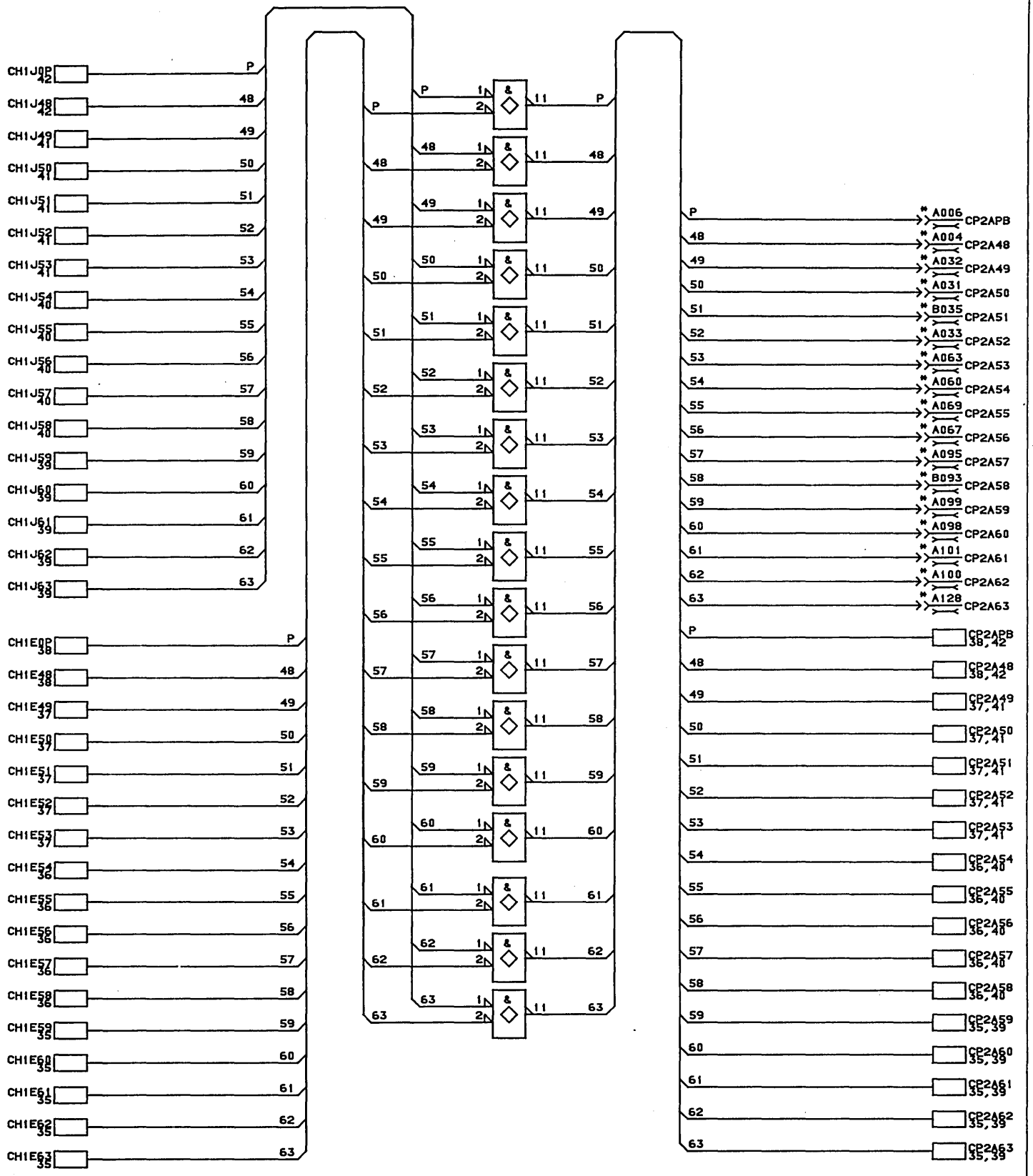

CONTROL DATA CANADA LTD	BBL 1 DATA BUS 210 PAK ASSEMBLY TYPE: 1CH0	C		A
		08-MAR-84	SHEET 10	LOC. D10

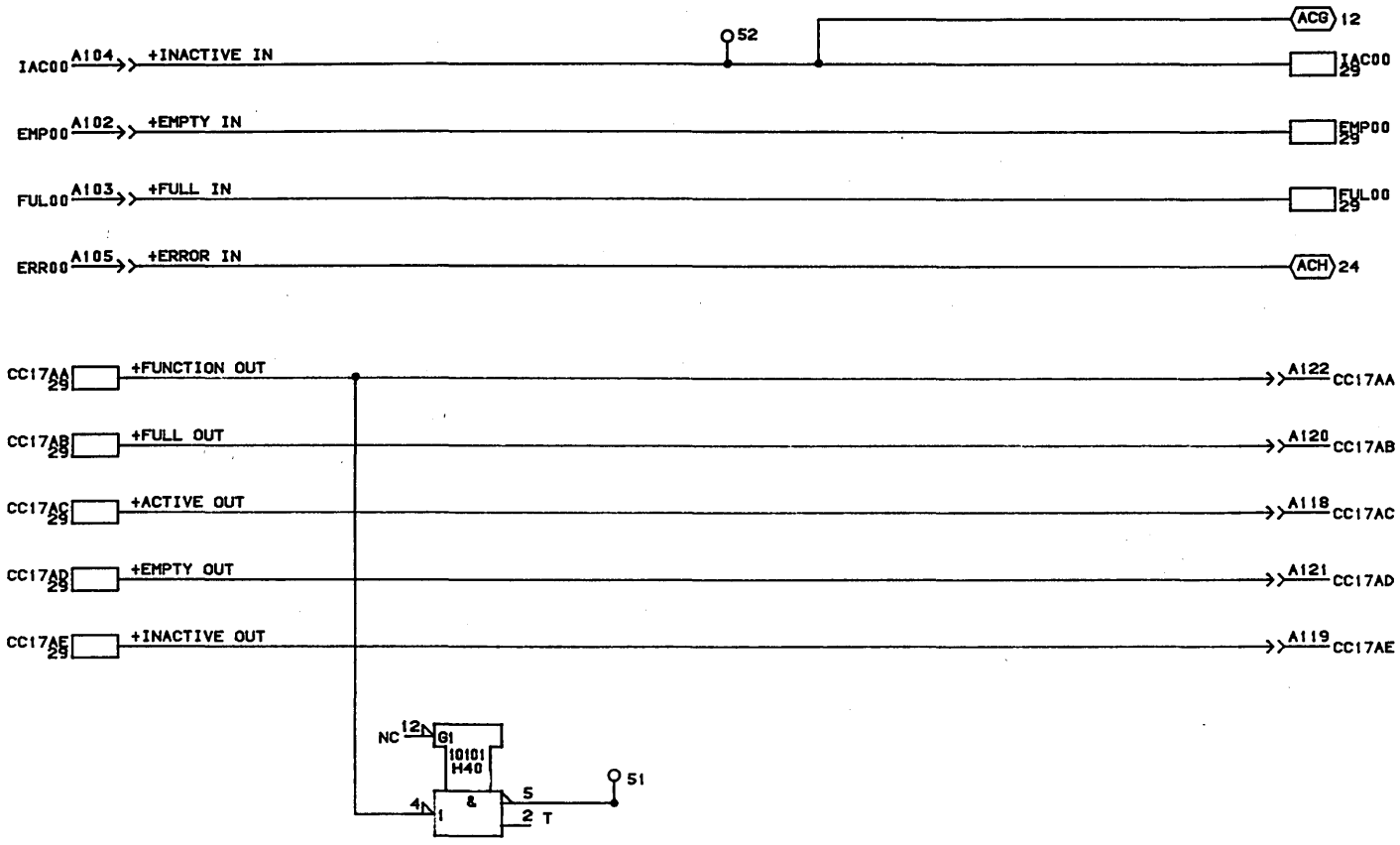

* NOTE :
TERMINATE THESE LINES
NEAR THE 10110 CHIPS

CONTROL DATA CANADA LTD	CHANNEL 00 CONTROL TO EXTERNAL EQUIPMENT 210 PAK ASSEMBLY TYPE: 1CH0	C		A
		09-MAR-84	SHEET 11	LOC. D10

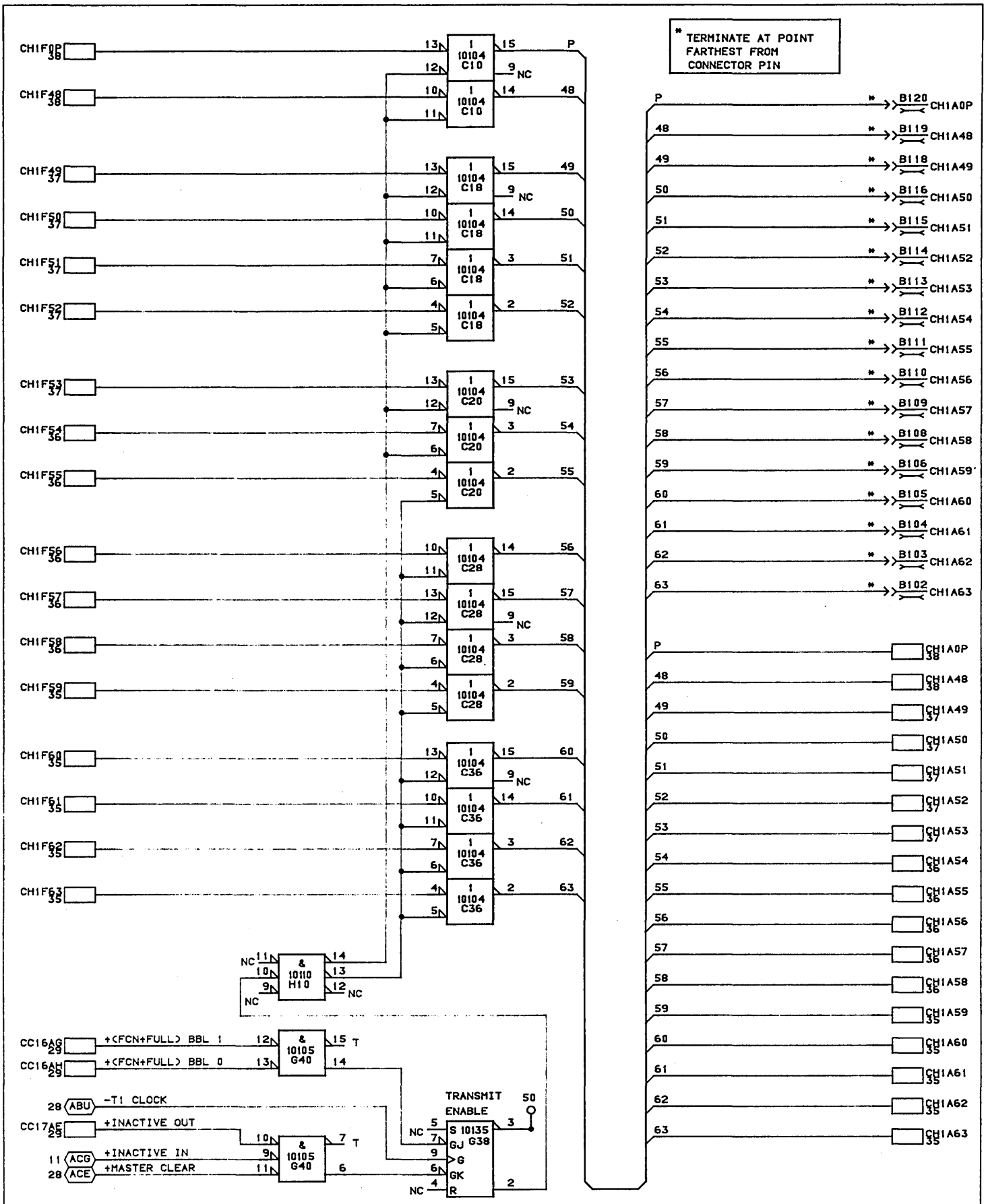

CONTROL DATA CANADA LTD	CHANNEL 00 EXTERNAL DATA INTERFACE MODULE ASSY:210 PAK TYPE: 1CH0	C	A
		09-MAR-84	SHEET 12 LOC. D10

ALL PINS HAVE AC SIGNALS

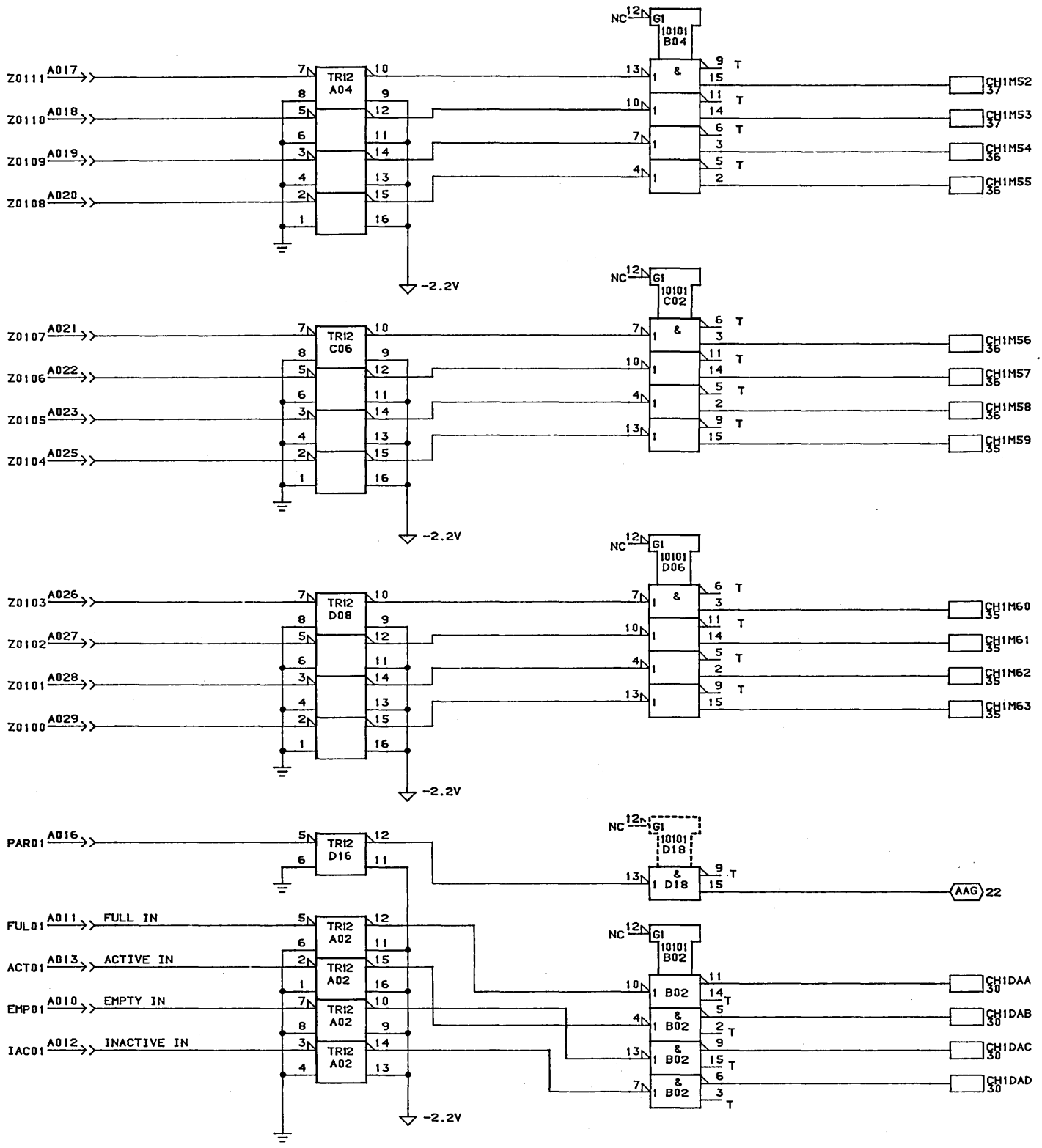

CONTROL DATA CANADA LTD	CHANNEL 01 EXTERNAL RECEIVERS MODULE ASSY:210 PAK TYPE: 1CH0	C		C
		21-MAR-85	SHEET 013	LOC. D10

ALL PINS HAVE AC SIGNALS

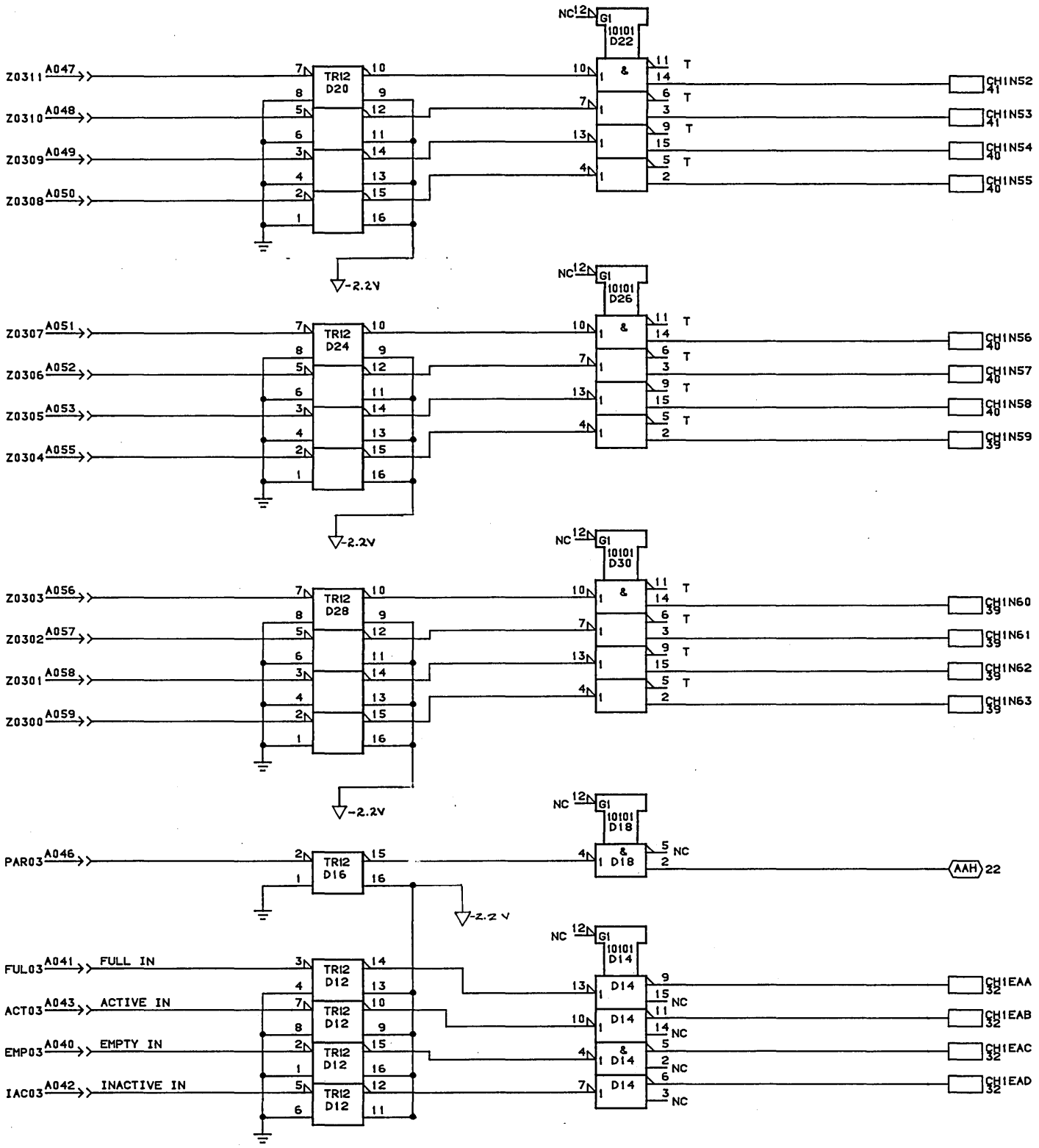

CONTROL DATA CANADA LTD	CHANNEL 03 EXTERNAL RECEIVERS MODULE ASSY:210 PAK TYPE: 1CH0	C		
		09-MAR-84	SHEET 14	LOC. D10

ALL PINS HAVE AC SIGNALS.

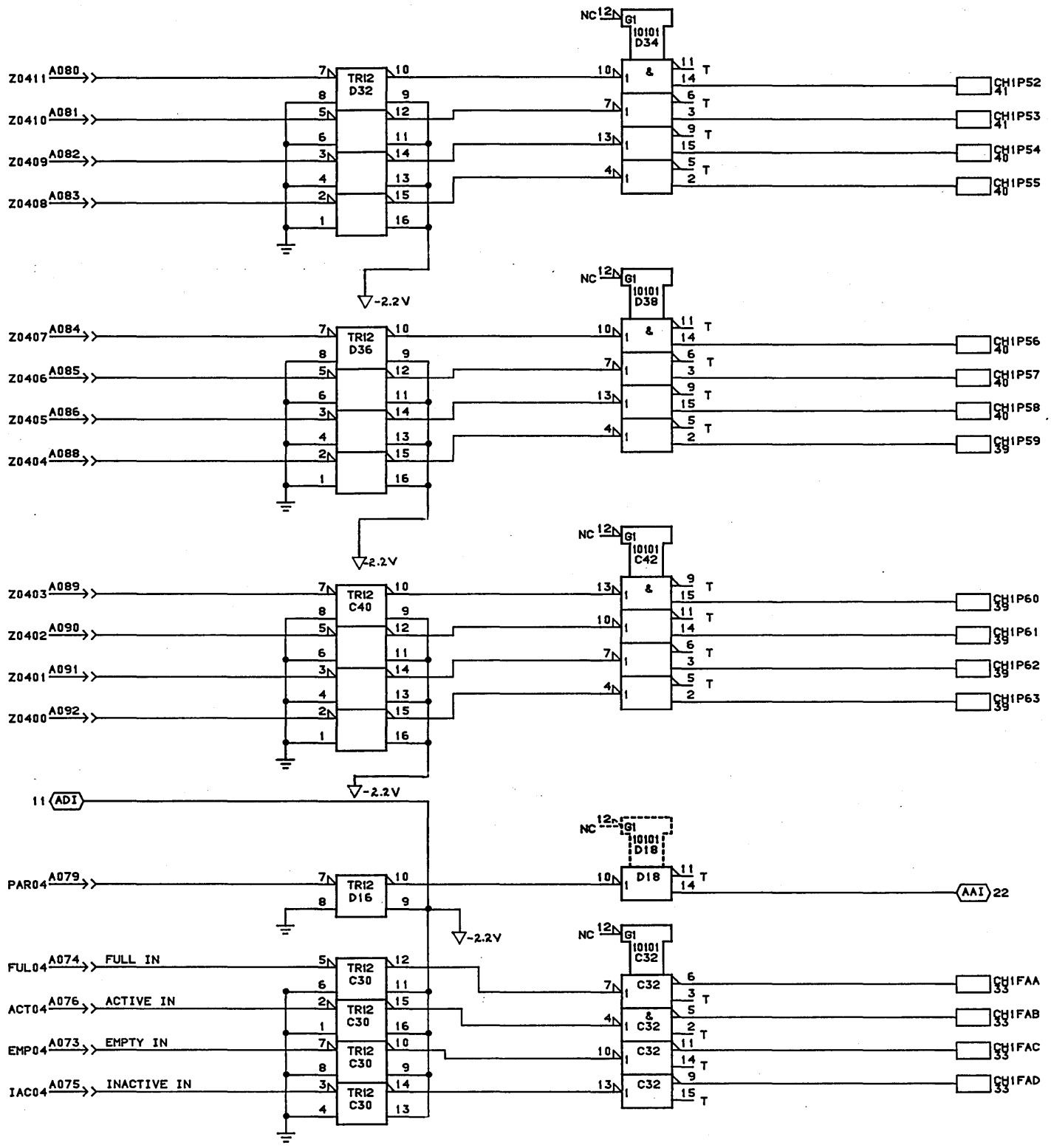

CONTROL DATA CANADA LTD	CHANNEL 04 EXTERNAL RECEIVERS MODULE ASSY:210 PAK TYPE: 1CH0	C		A
		09-MAR-84	SHEET 15. LOC. D10	

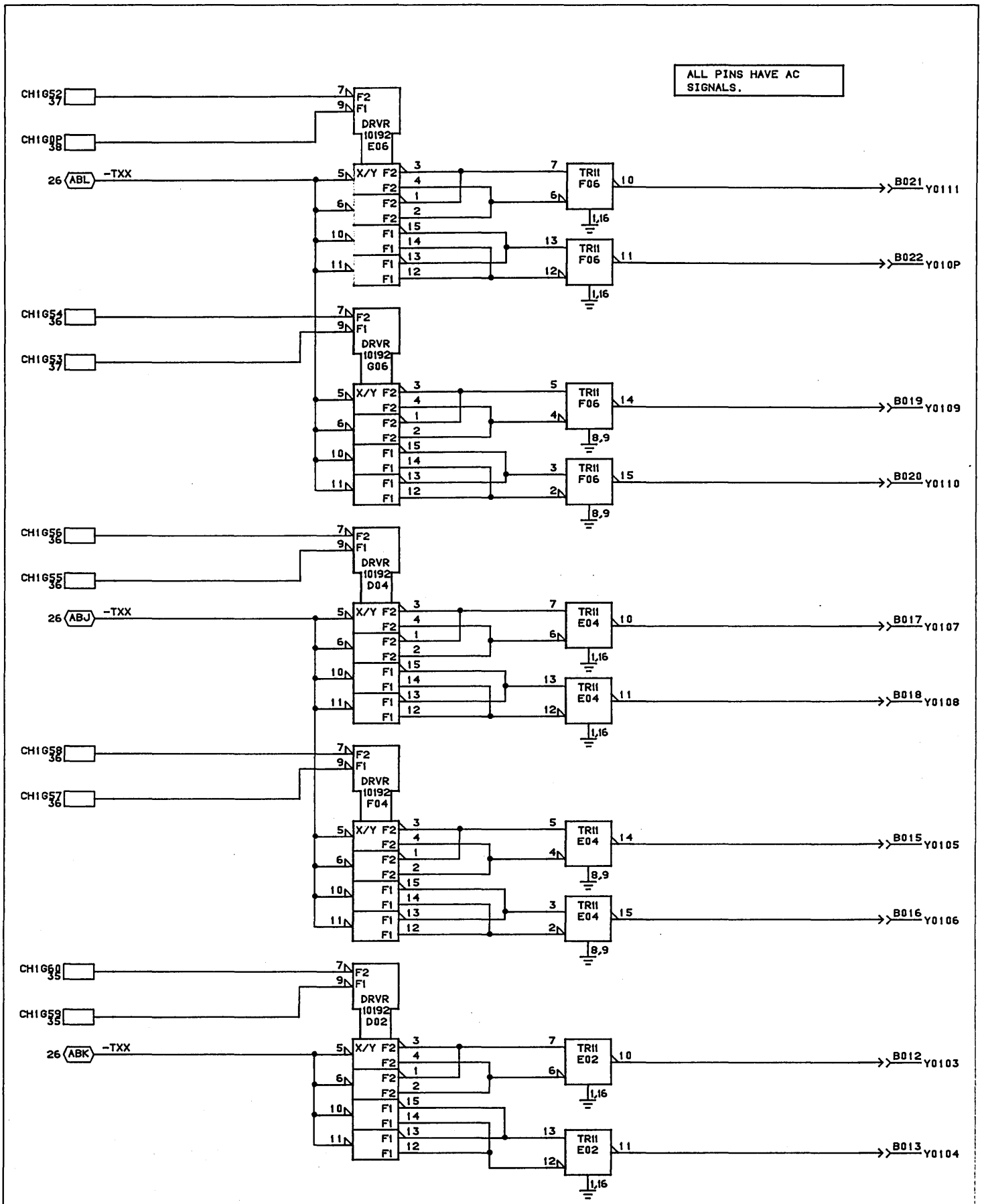

CONTROL DATA CANADA LTD	CHANNEL 01 EXTERNAL TRANSMITTERS MODULE ASSY:210 PAK TYPE: 1CH0	C		A
		09-MAR-84	SHEET 16	LOC. D10

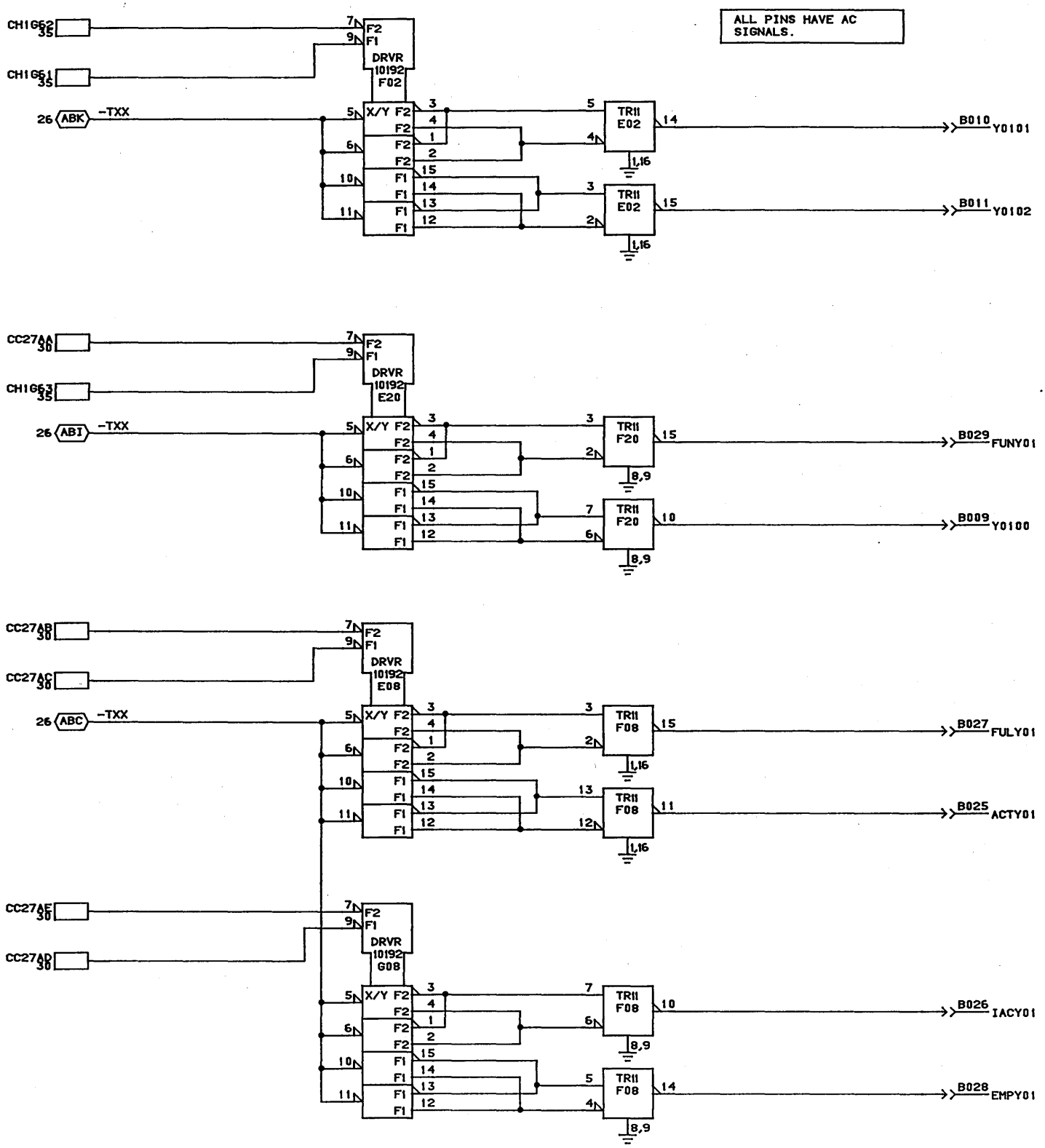

CONTROL DATA CANADA LTD	CHANNEL 01 EXTERNAL TRANSMITTERS MODULE ASSY:210 PAK TYPE:1CH0	C		A
		09-MAR-84	SHEET 17	LOC. D10

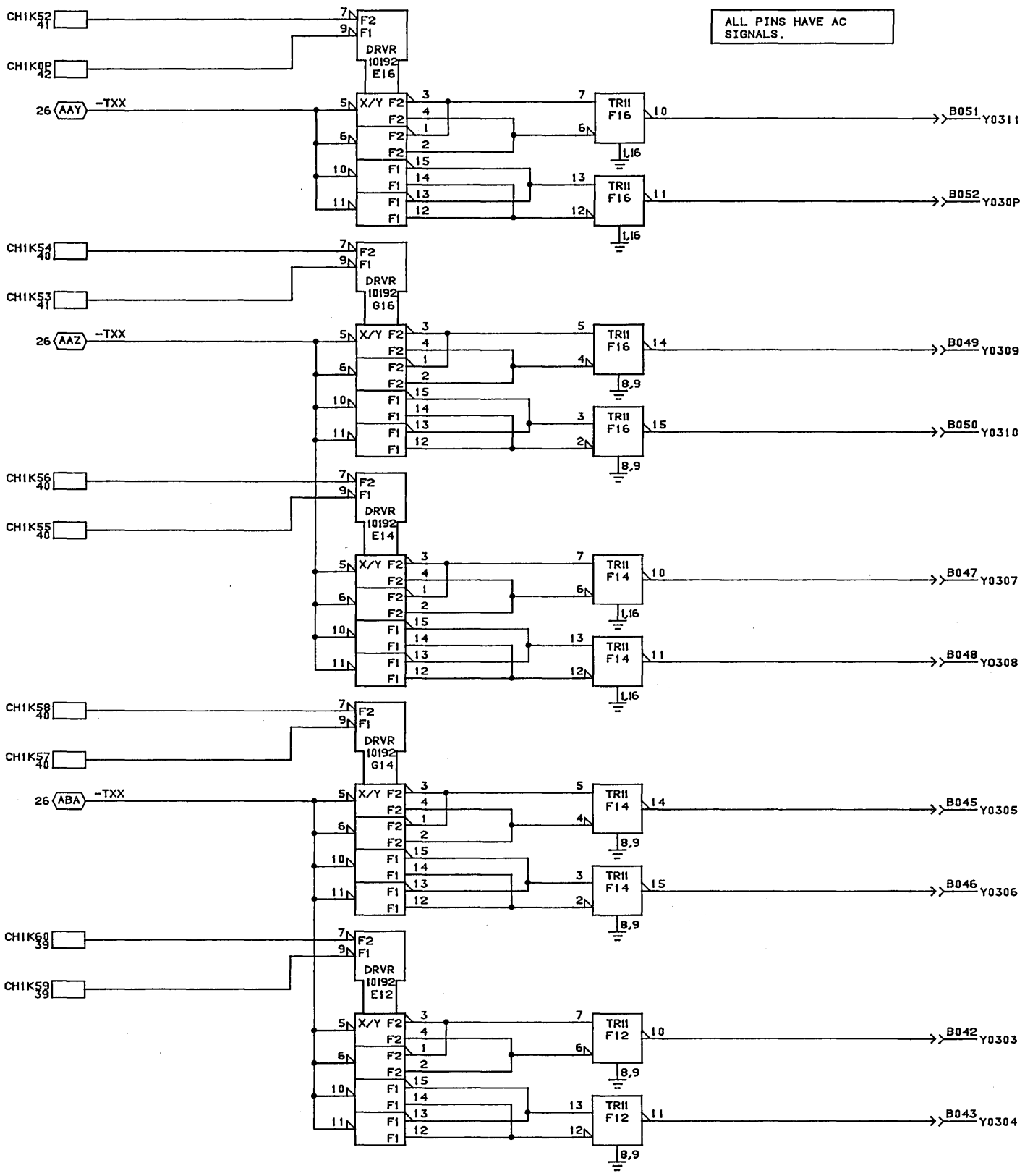

CONTROL DATA CANADA LTD	CHANNEL 03 EXTERNAL TRANSMITTERS MODULE ASSY:210 PAK TYPE: 1CH0	C		A
		09-MAR-84	SHEET 18	LOC. D10

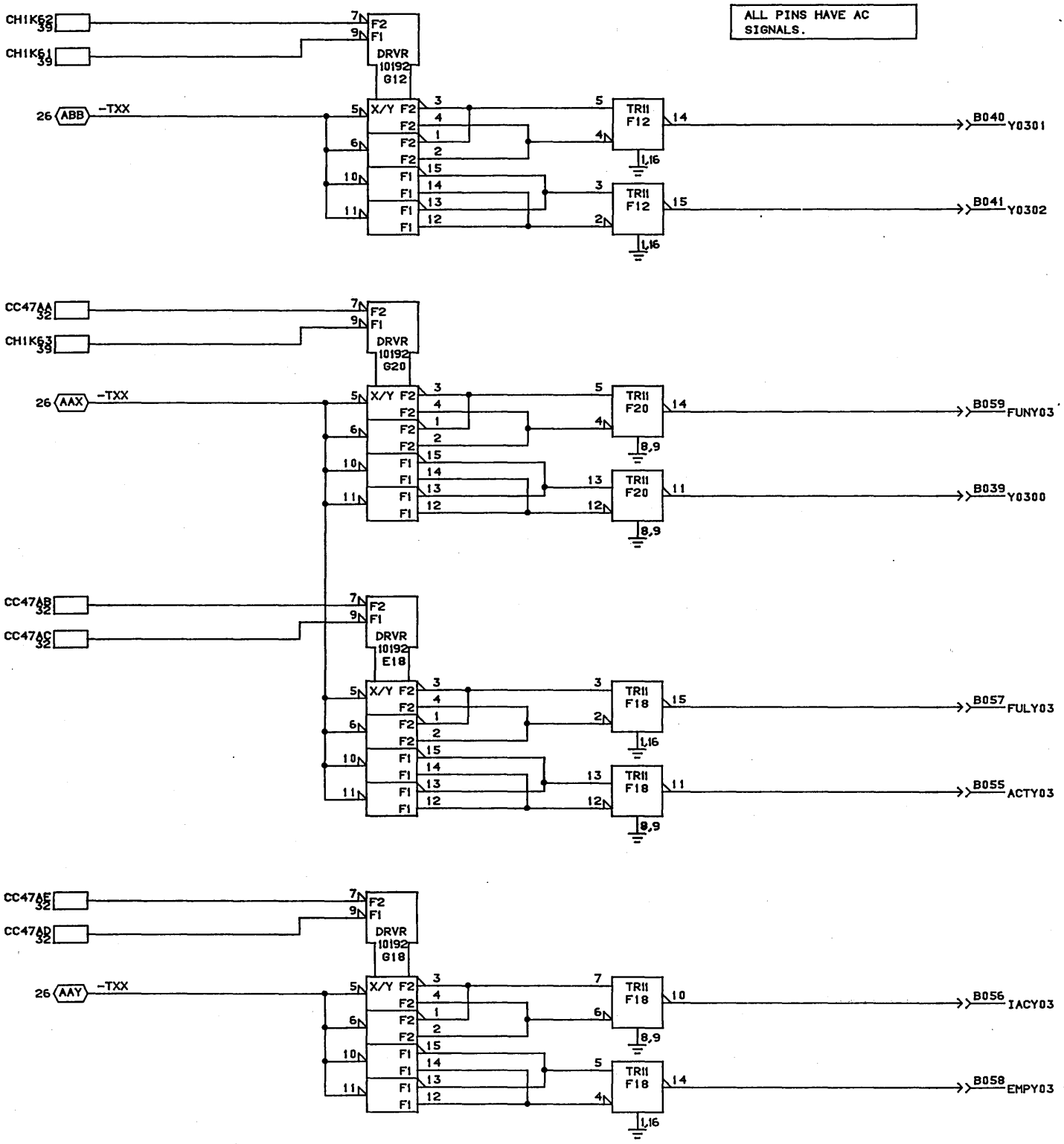

CONTROL DATA CANADA LTD	CHANNEL 03 EXTERNAL TRANMITTERS MODULE ASSY:210 PAK TYPE: 1CH0	C		A
		09-MAR-84	SHEET 19	LOC. D10

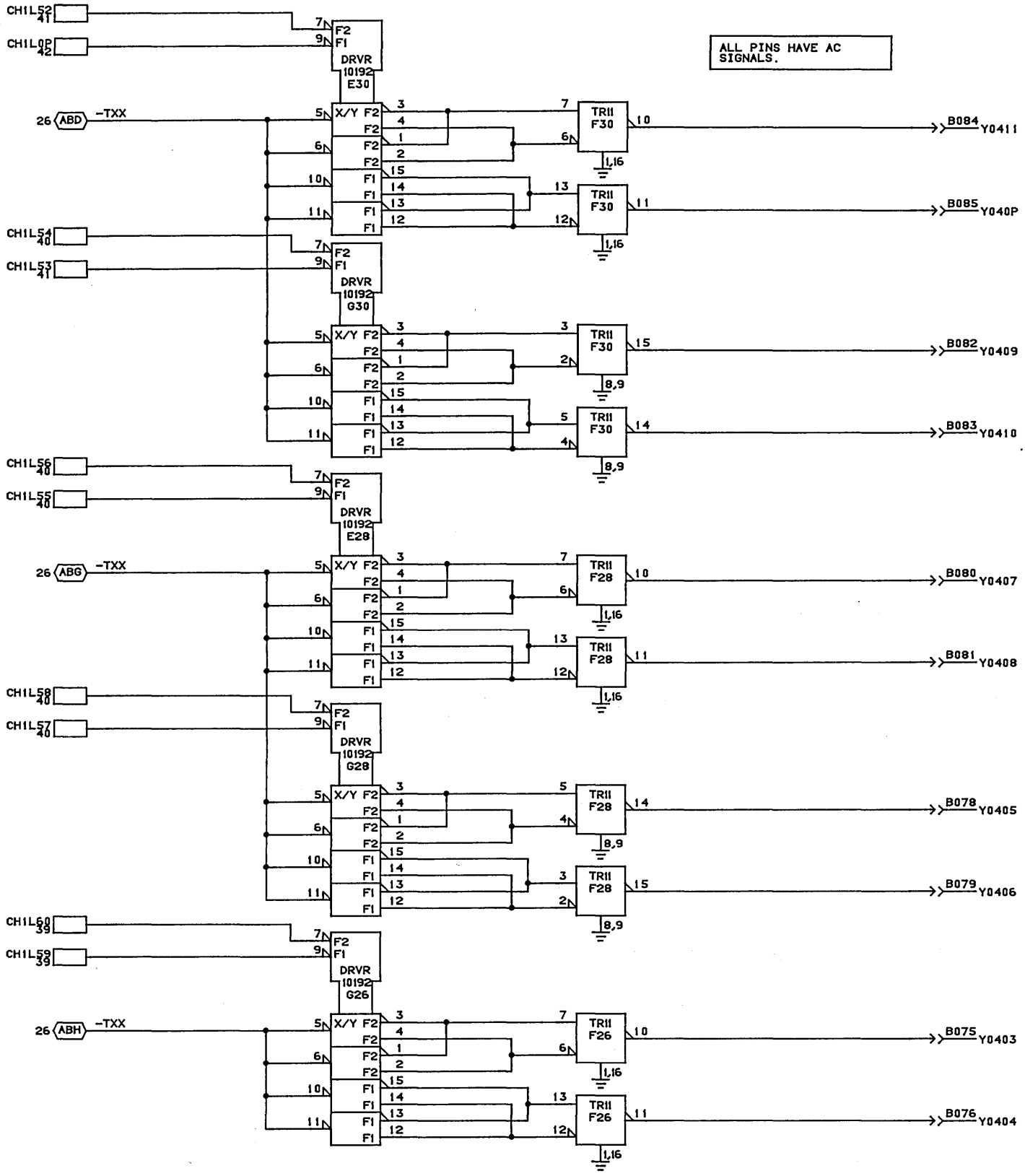

CONTROL DATA CANADA LTD	CHANNEL 04 EXTERNAL TRANSMITTERS MODULE ASSY: 210 PAK TYPE: 1CH0	C		A
		09-MAR-84	SHEET 20	LOC. D10

ALL PINS HAVE AC SIGNALS

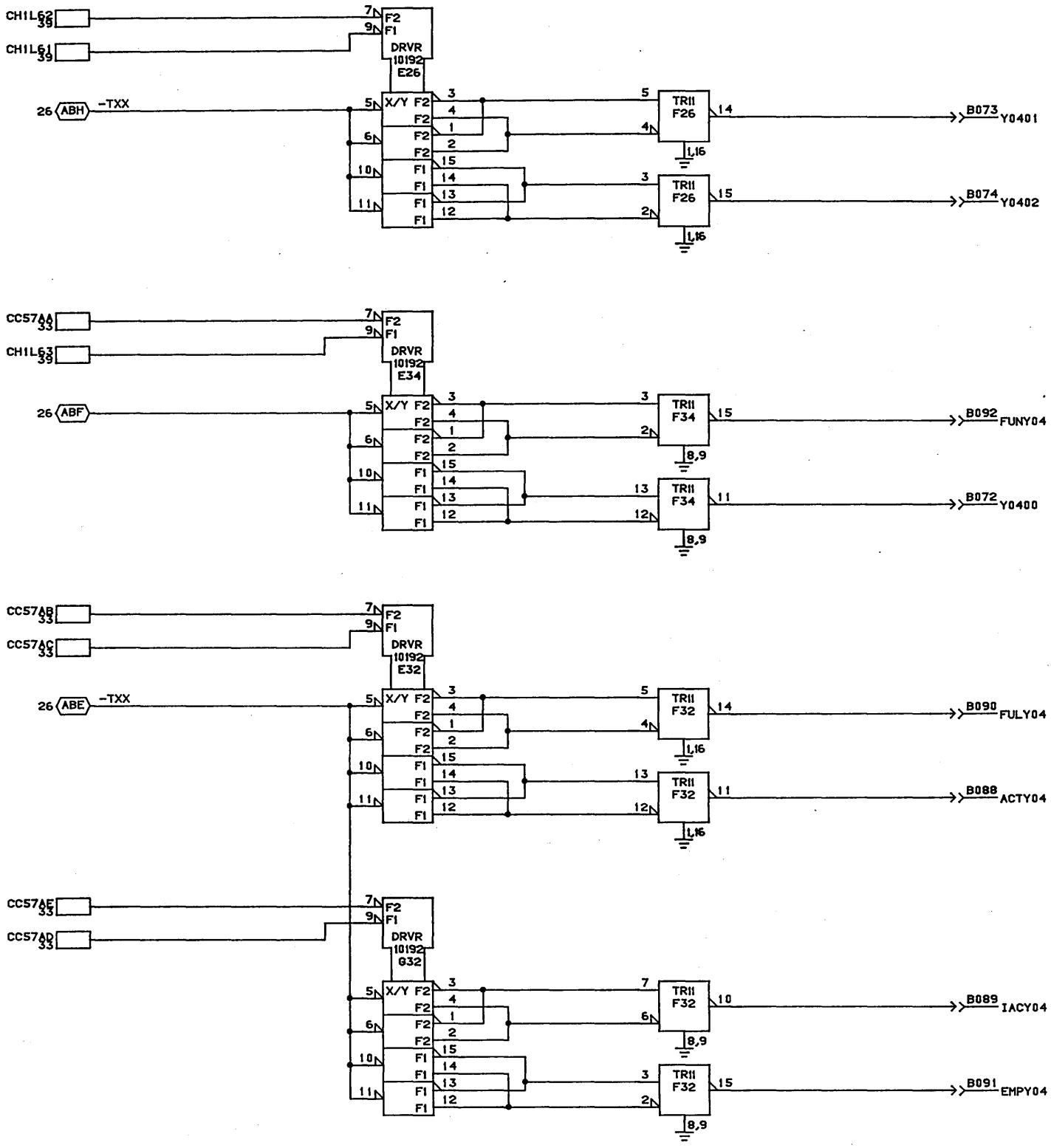

CONTROL DATA CANADA LTD	CHANNEL 04 EXTERNAL TRANSMITTERS 210 PAK ASSEMBLY TYPE: 1CH0	C		A
		09-MAR-84	SHEET 21	LOC. D10

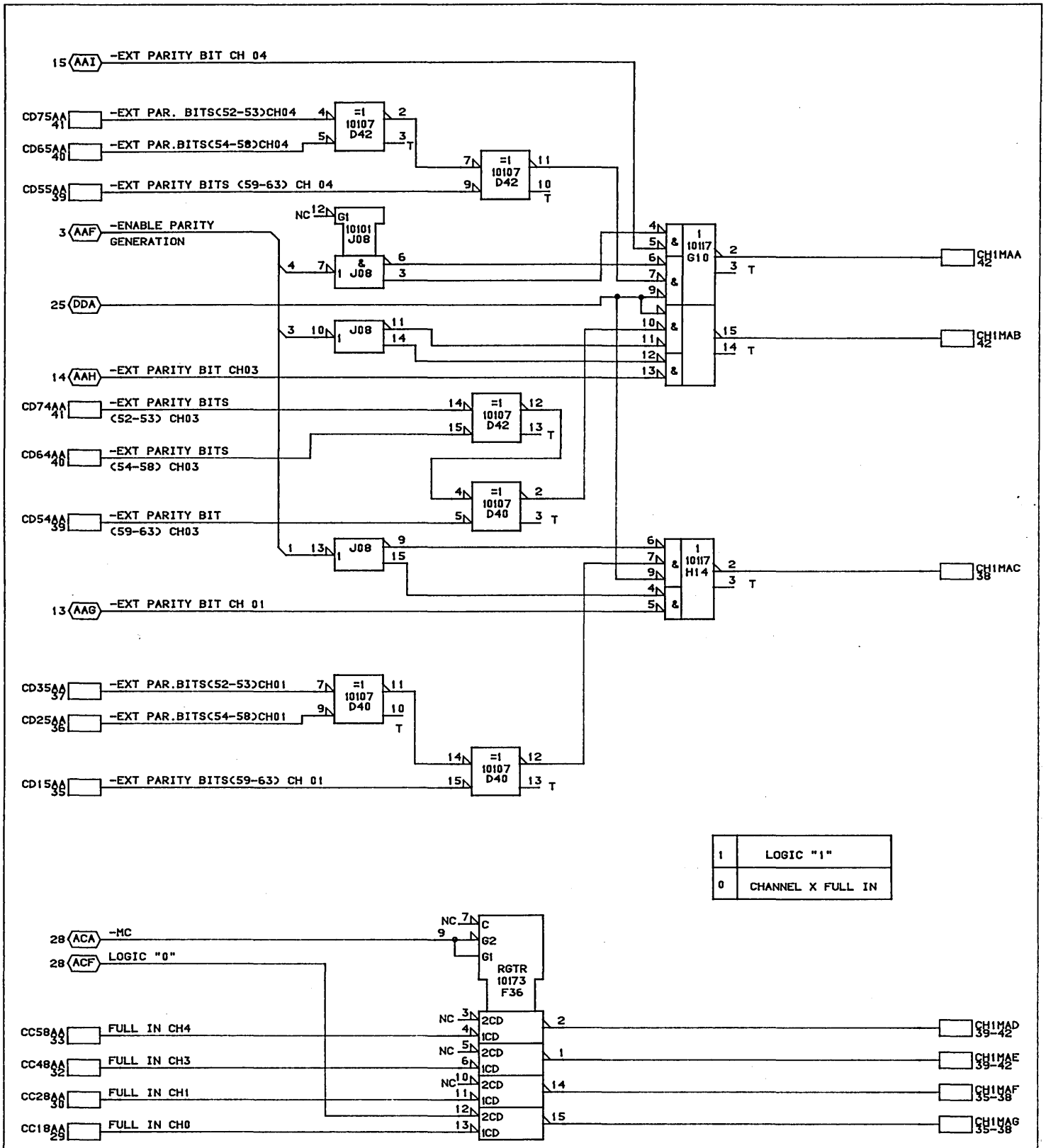

CONTROL DATA CANADA LTD	PARITY GENERATION FOR EXTERNAL DATA IN 210 PAK ASSEMBLY TYPE: 1CH0	C		A
		09-MAR-84	SHEET 22	LOC. D10

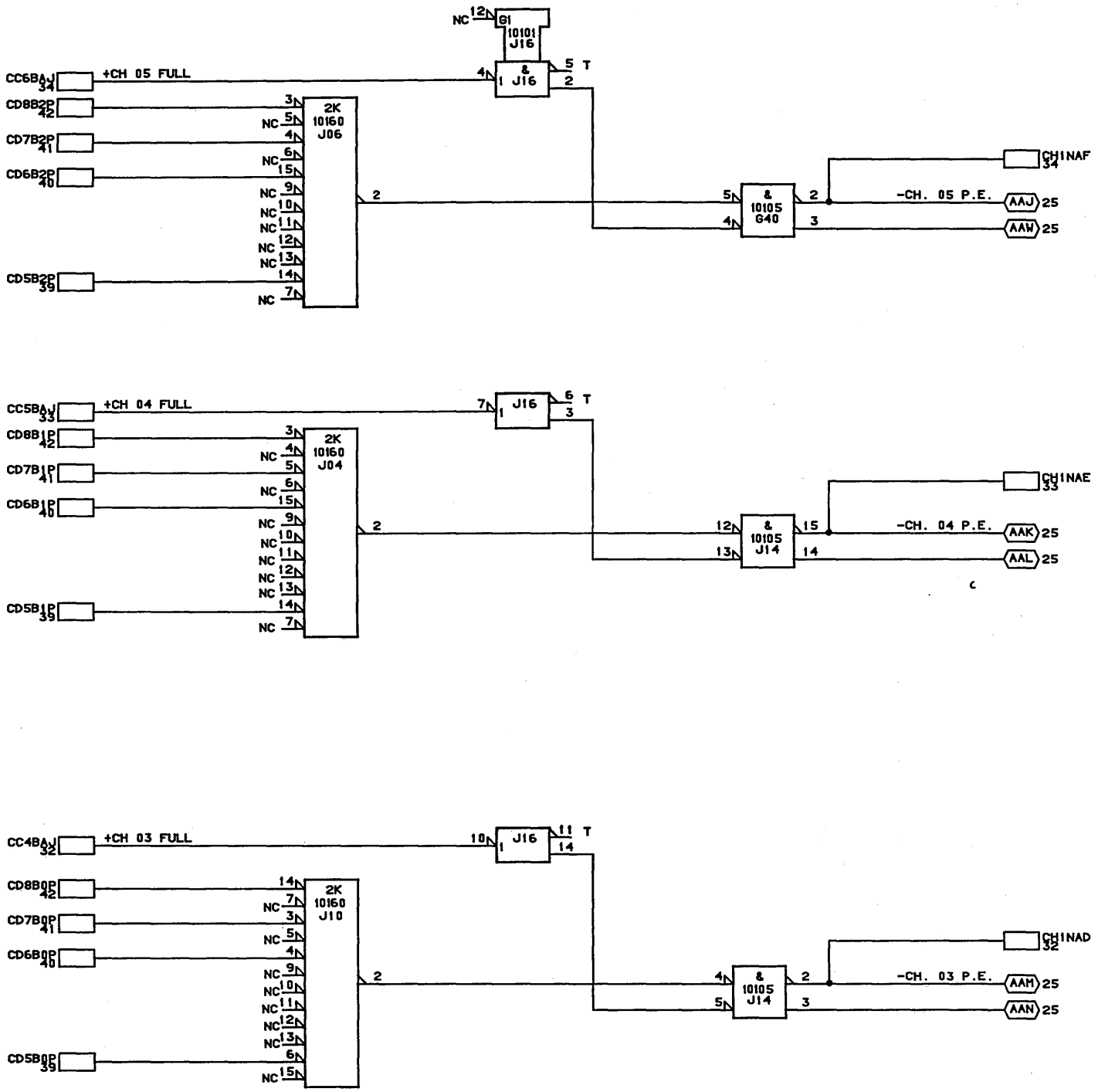

CONTROL DATA CANADA LTD	PARITY CHECKERS (CHANNELS 3-5) 210 PAK ASSEMBLY TYPE: 1CH0	C		A
		09-MAR-84	SHEET 23	LOC. D10

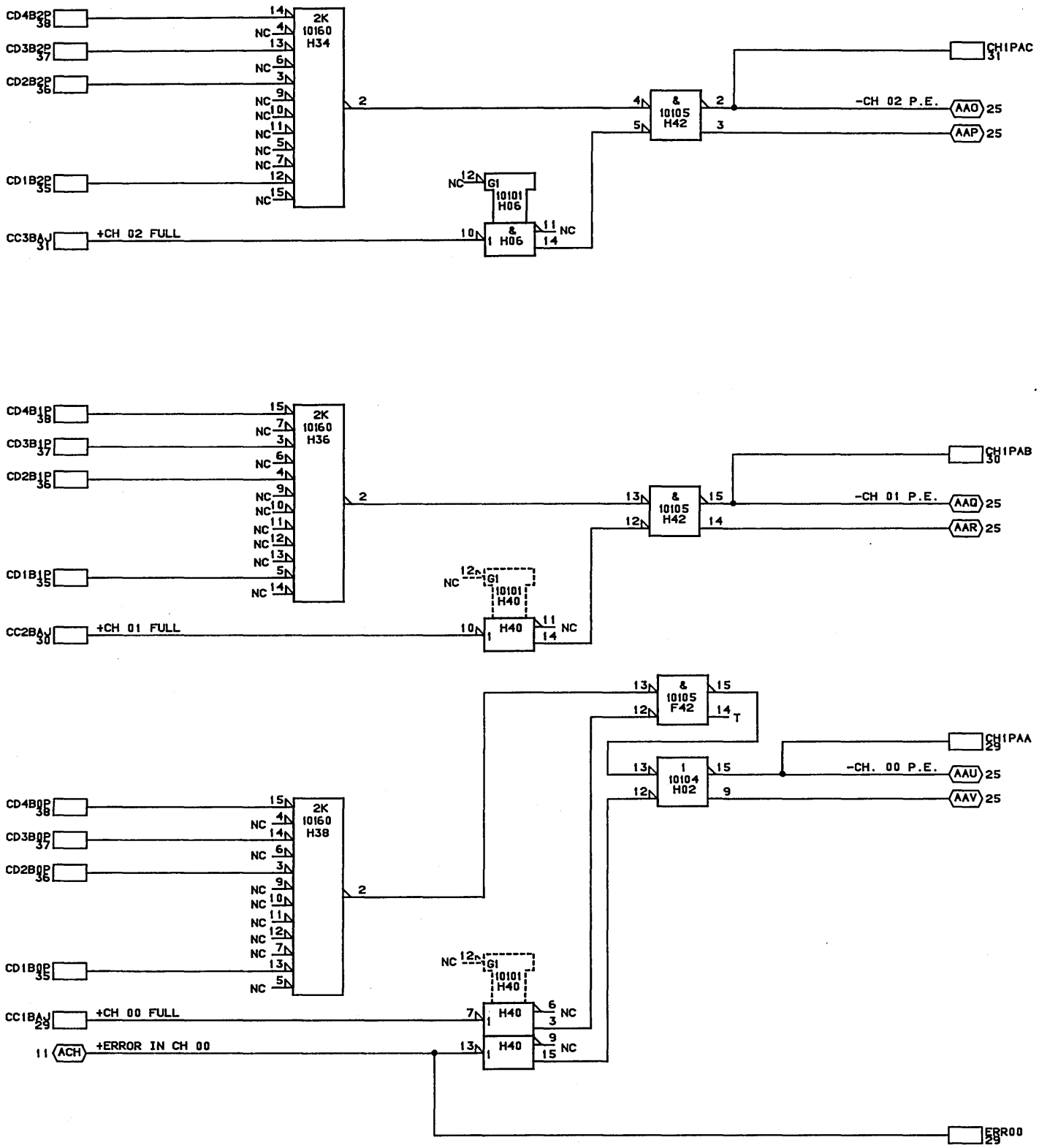

CONTROL DATA CANADA LTD	PARITY CHECKERS (CHANNELS 0-2) 210 PAK ASSEMBLY TYPE: 1CH0	C		A
		09-MAR-84	SHEET 24	LOC. D10

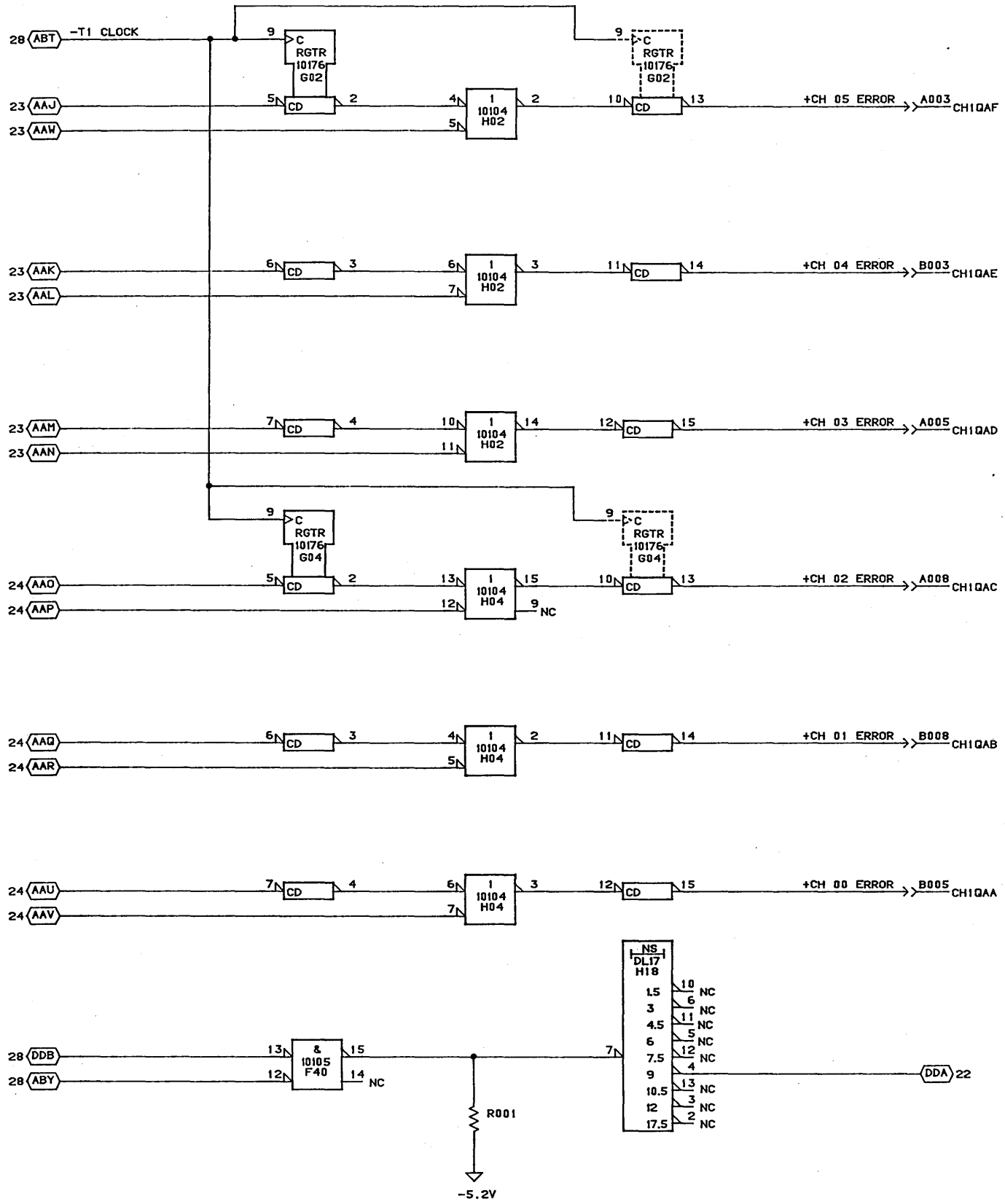

CONTROL DATA CANADA LTD	CHANNEL 00-05 ERROR REPORTING MODULE ASSY:210 PAK TYPE: 1CH0	C		C
		21-MAR-85	SHEET 025	LOC. D10

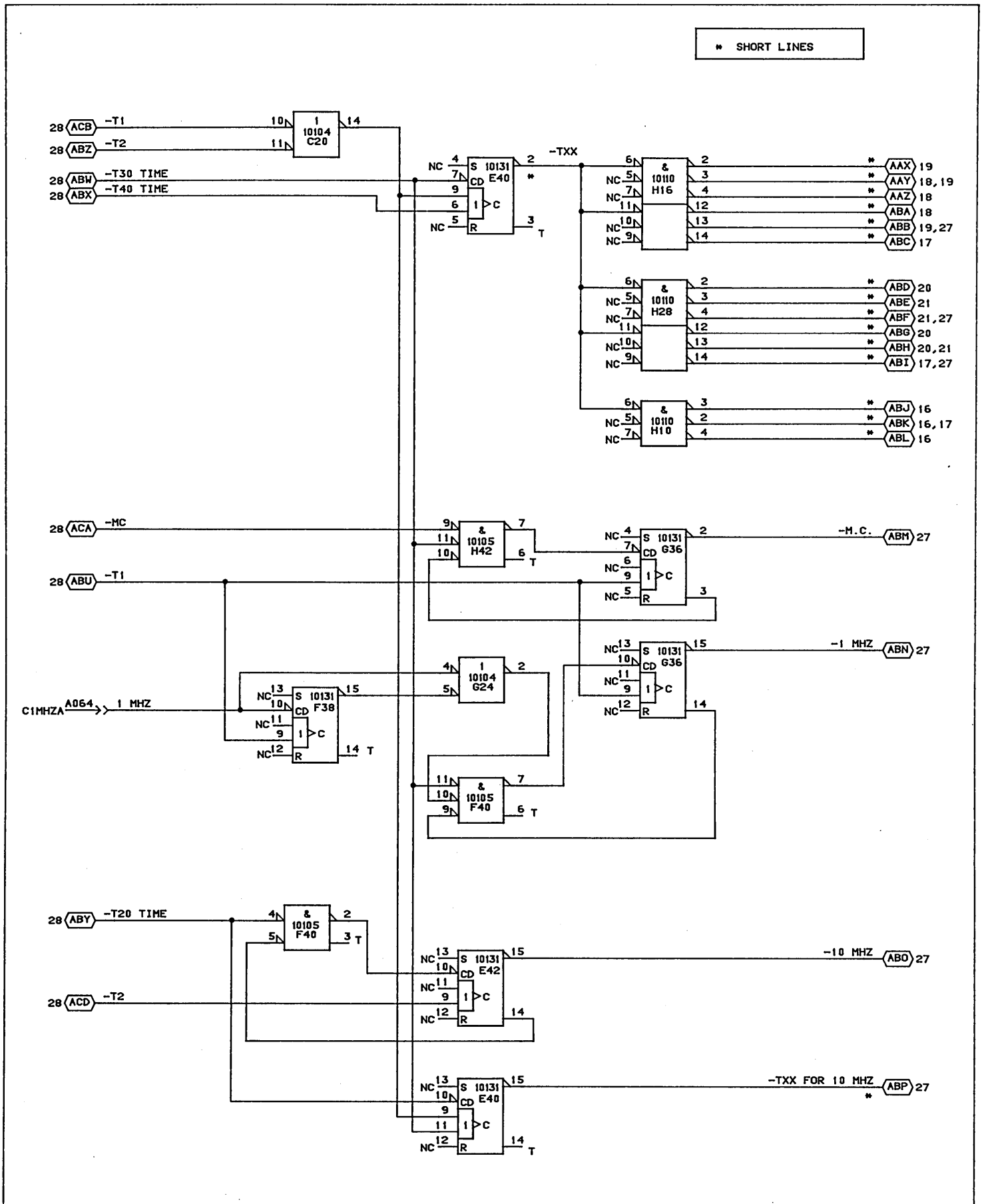

CONTROL DATA CANADA LTD	100 NSEC CLOCKS MODULE ASSY:210 PAK TYPE: 1CH0	C		A
		09-MAR-84	SHEET 26	LOC. D10

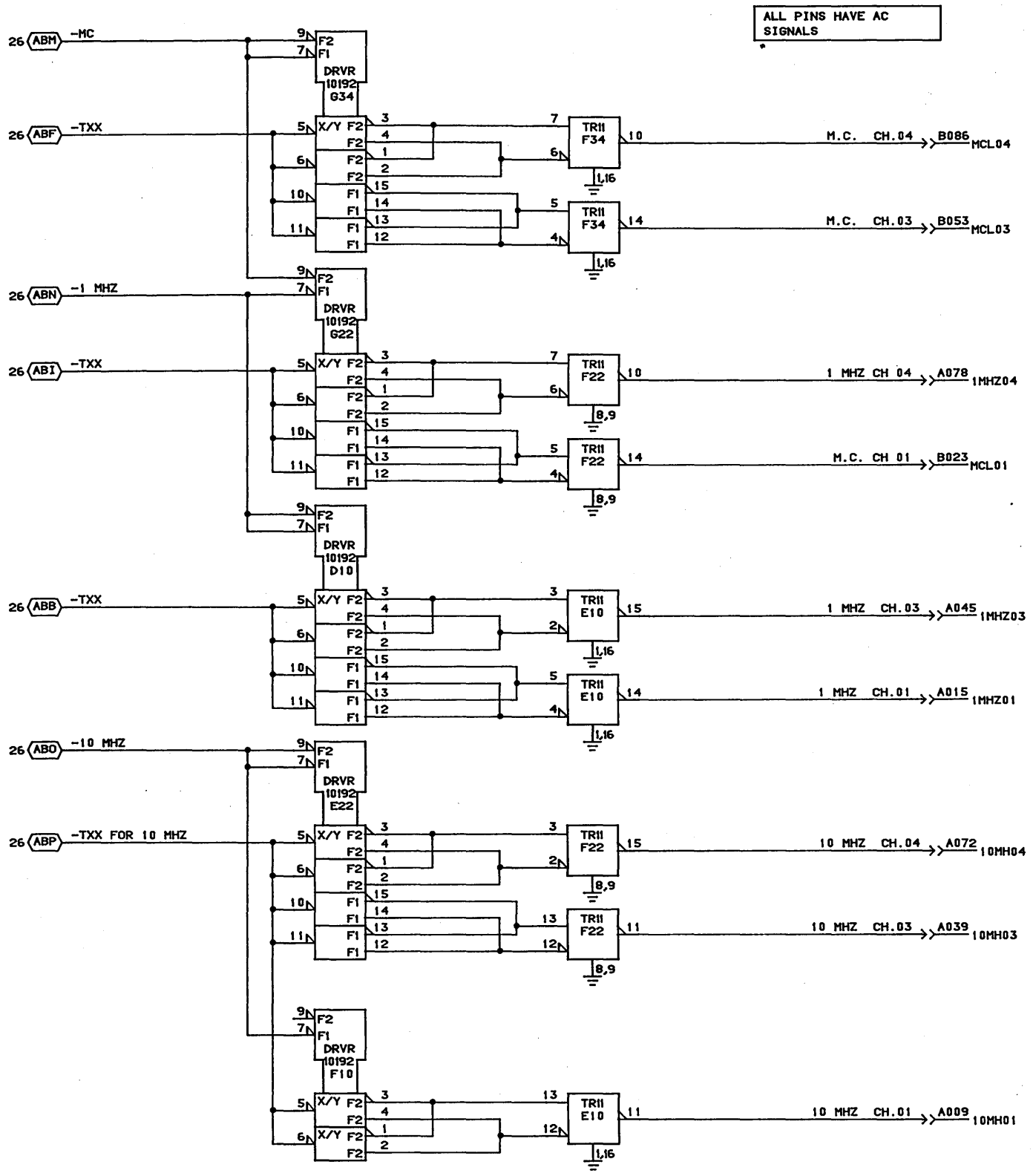

CONTROL DATA CANADA LTD	CLOCK TRANSMITTERS MODULE ASSY:210 PAK TYPE: 1CH0	C		A
		09-MAR-84	SHEET 27	LOC. D10

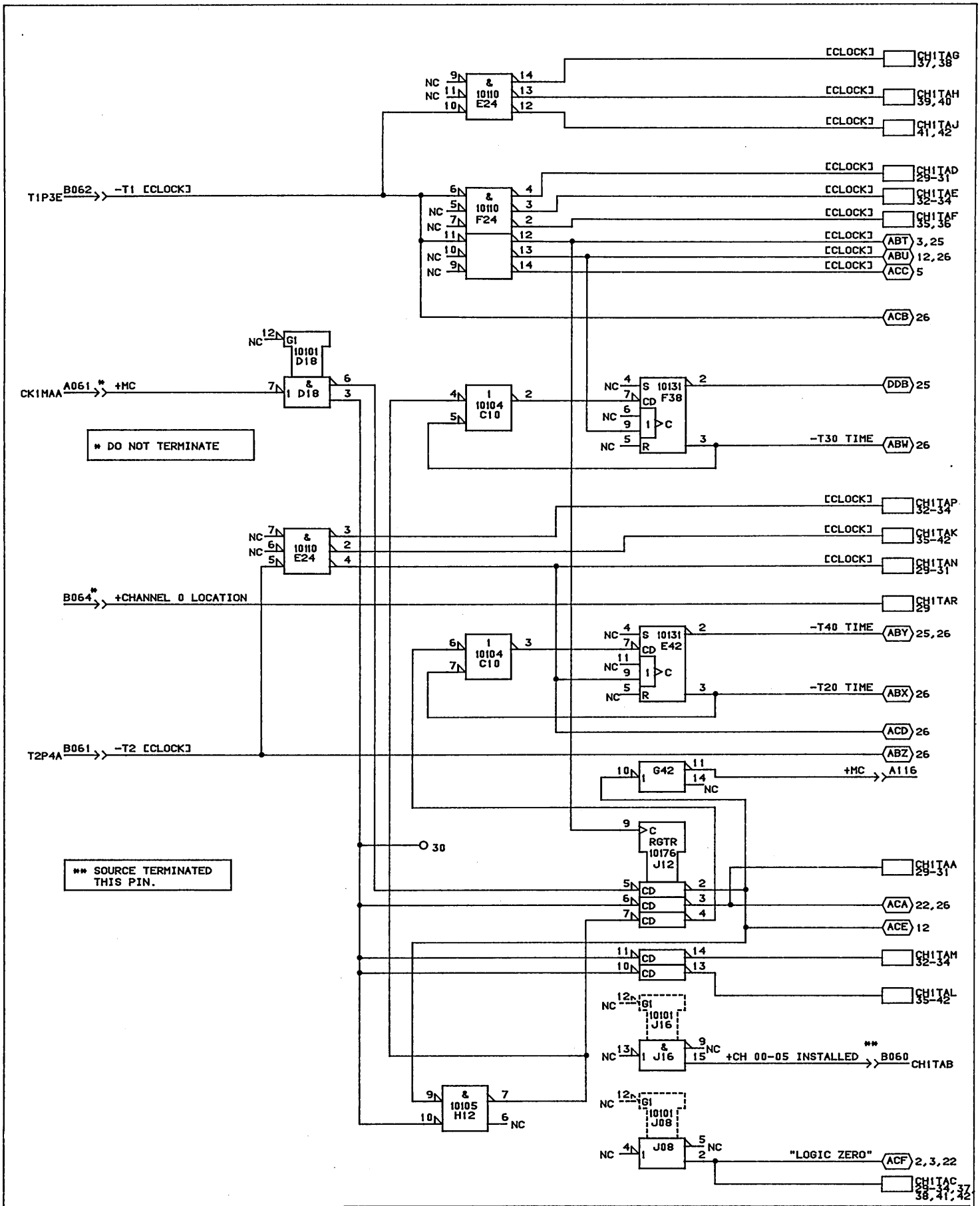

CONTROL DATA CANADA LTD	CLOCKS MODULE ASSY:210 PAK TYPE: 1CH0	C		A
		09-MAR-84	SHEET 28	LOC D10

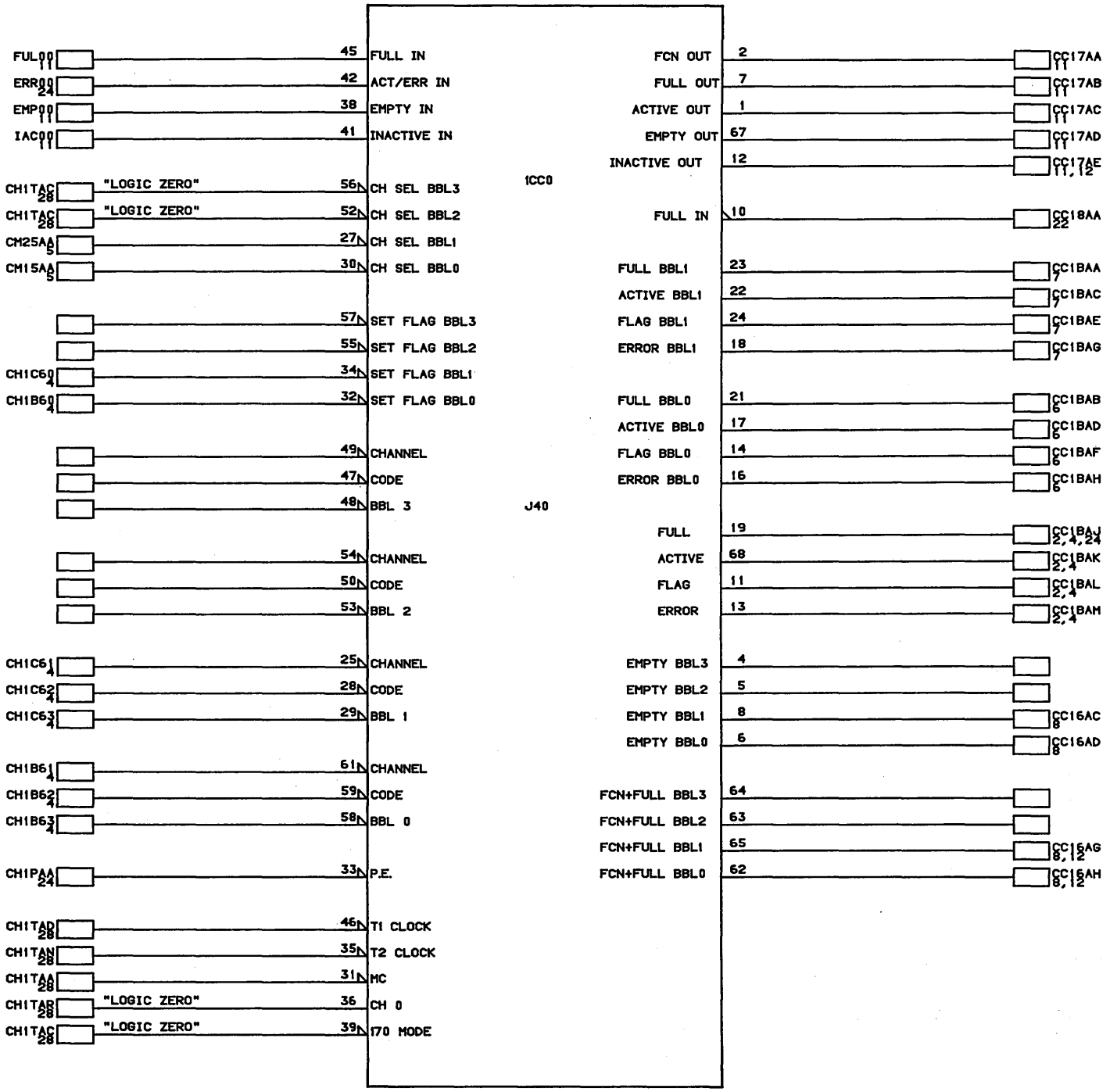

CONTROL DATA CANADA LTD	CHANNEL 00 CONTROL CHIP MODULE ASSY:210 PAK TYPE: 1CH0	C		A
		09-MAR-84	SHEET 29	LOC. D10

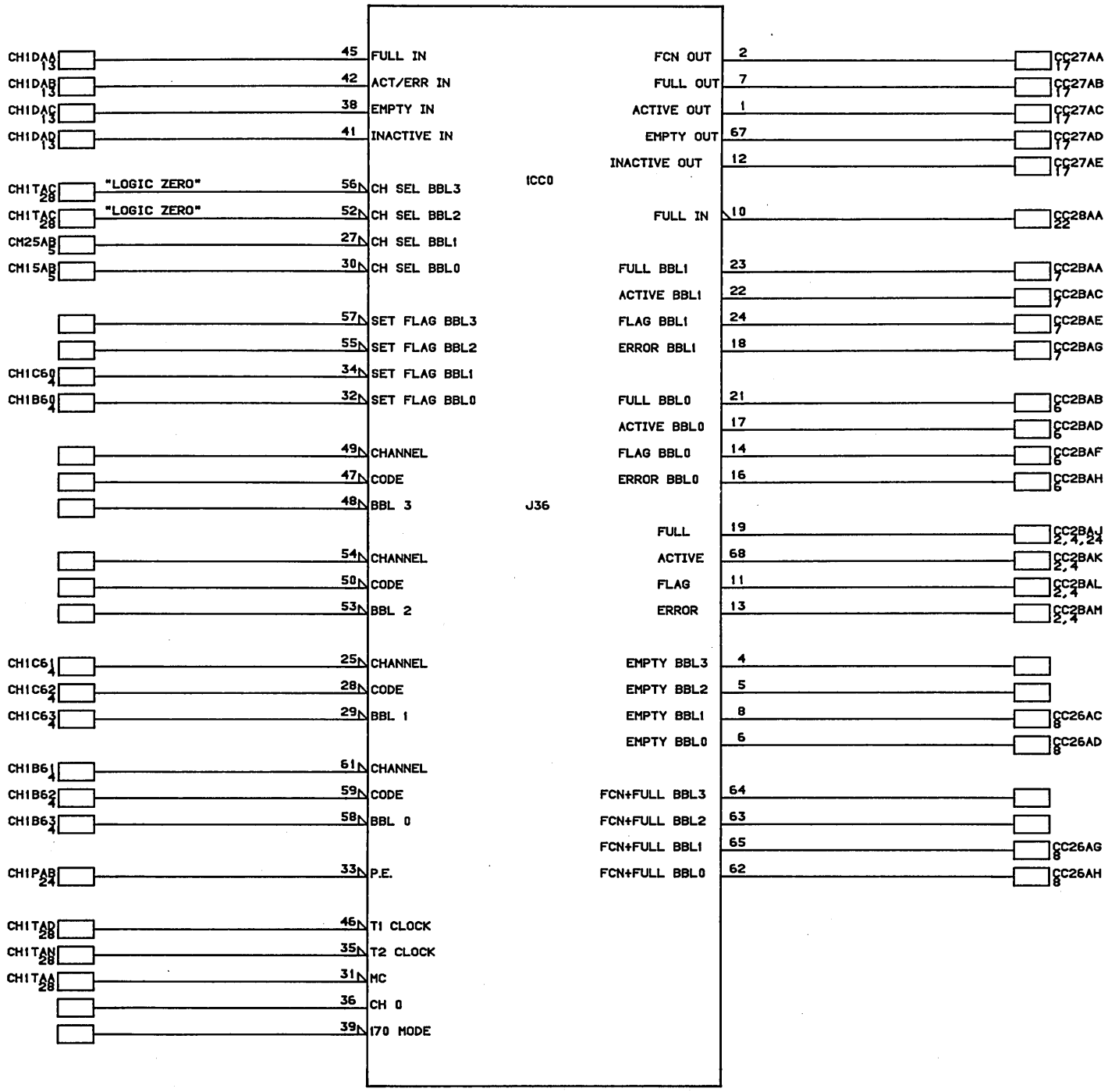

CONTROL DATA CANADA LTD	CNANNEL 01 CONTROL CHIP MODULE ASSY:210 PAK TYPE: 1CH0	C		A
		09-MAR-84	SHEET 30	LOC. D10

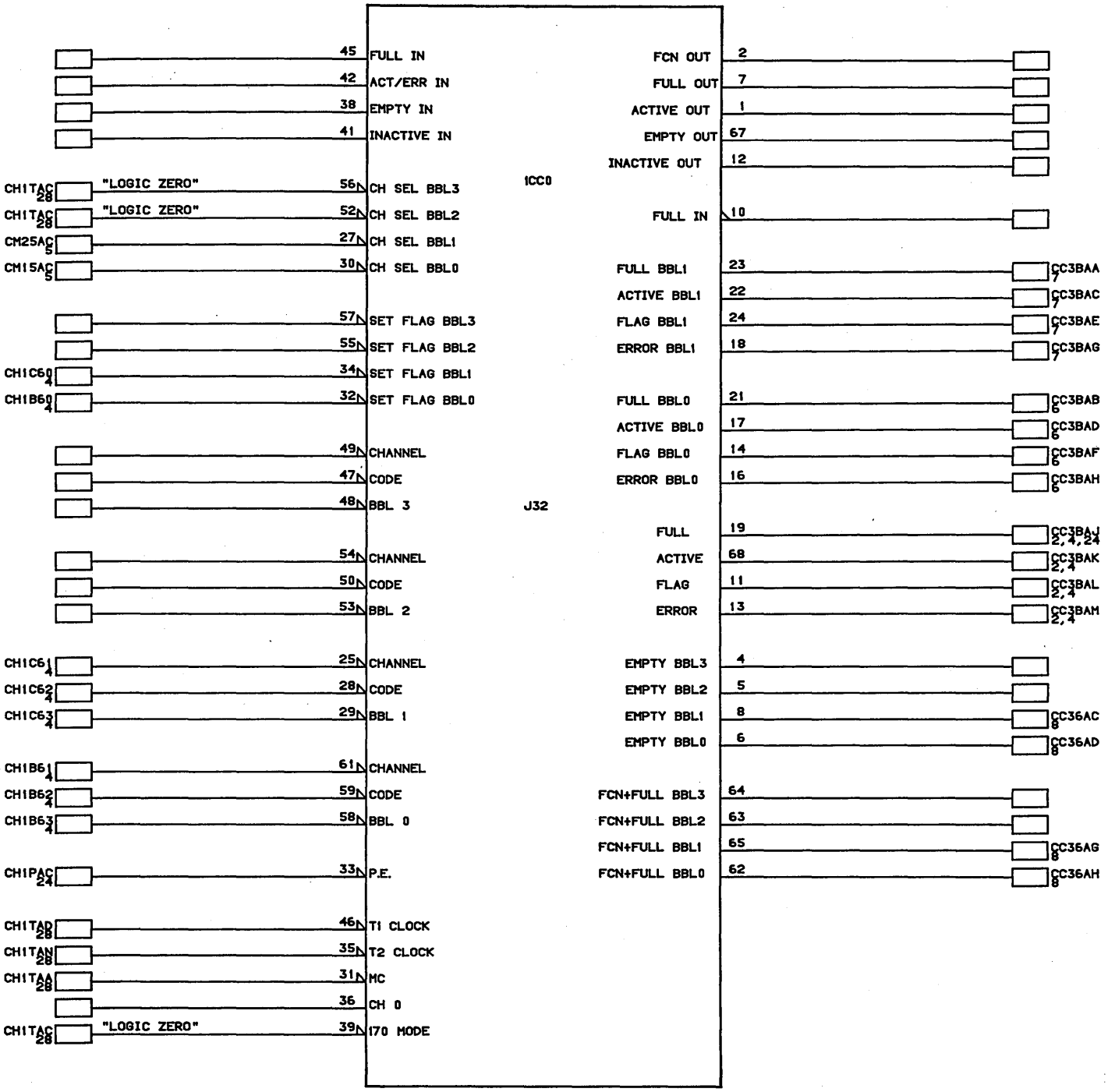

CONTROL DATA CANADA LTD	CHANNEL 02 CONTROL CHIP MODULE ASSY: 210 PAK TYPE: 1CH0	C		A
		09-MAR-84	SHEET 31	LOC. D10

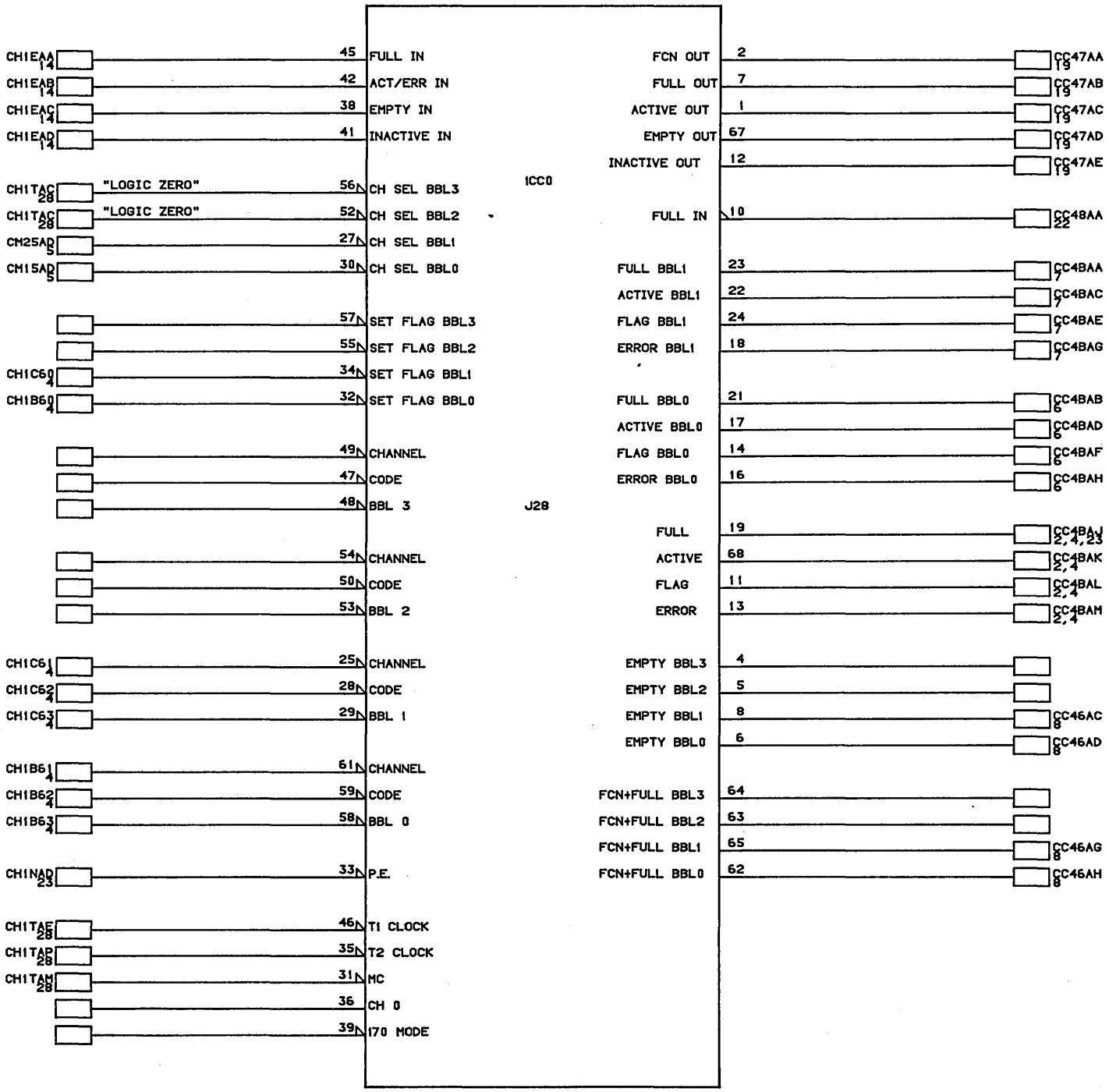

CONTROL DATA CANADA LTD	CHANNEL 03 CONTROL CHIP MODULE ASSY:210 PAK TYPE: 1CH0	C		A
		09-MAR-84	SHEET 32	LOC. D10

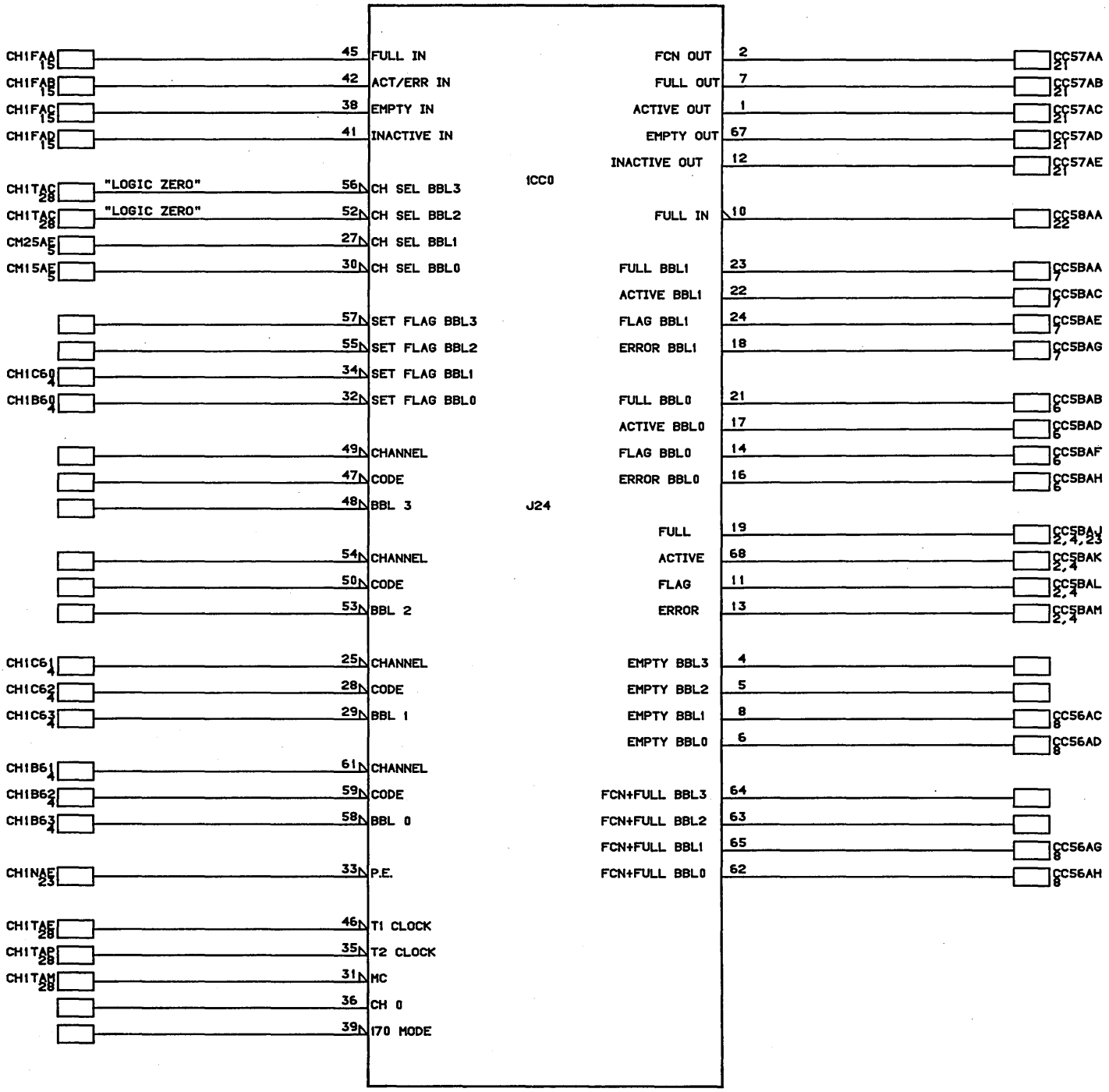

CONTROL DATA CANADA LTD	CHANNEL 04 CONTROL CHIP MODULE ASSY:210 PAK TYPE: 1CH0	C		A
		09-MAR-84	SHEET 33	LOC. D10

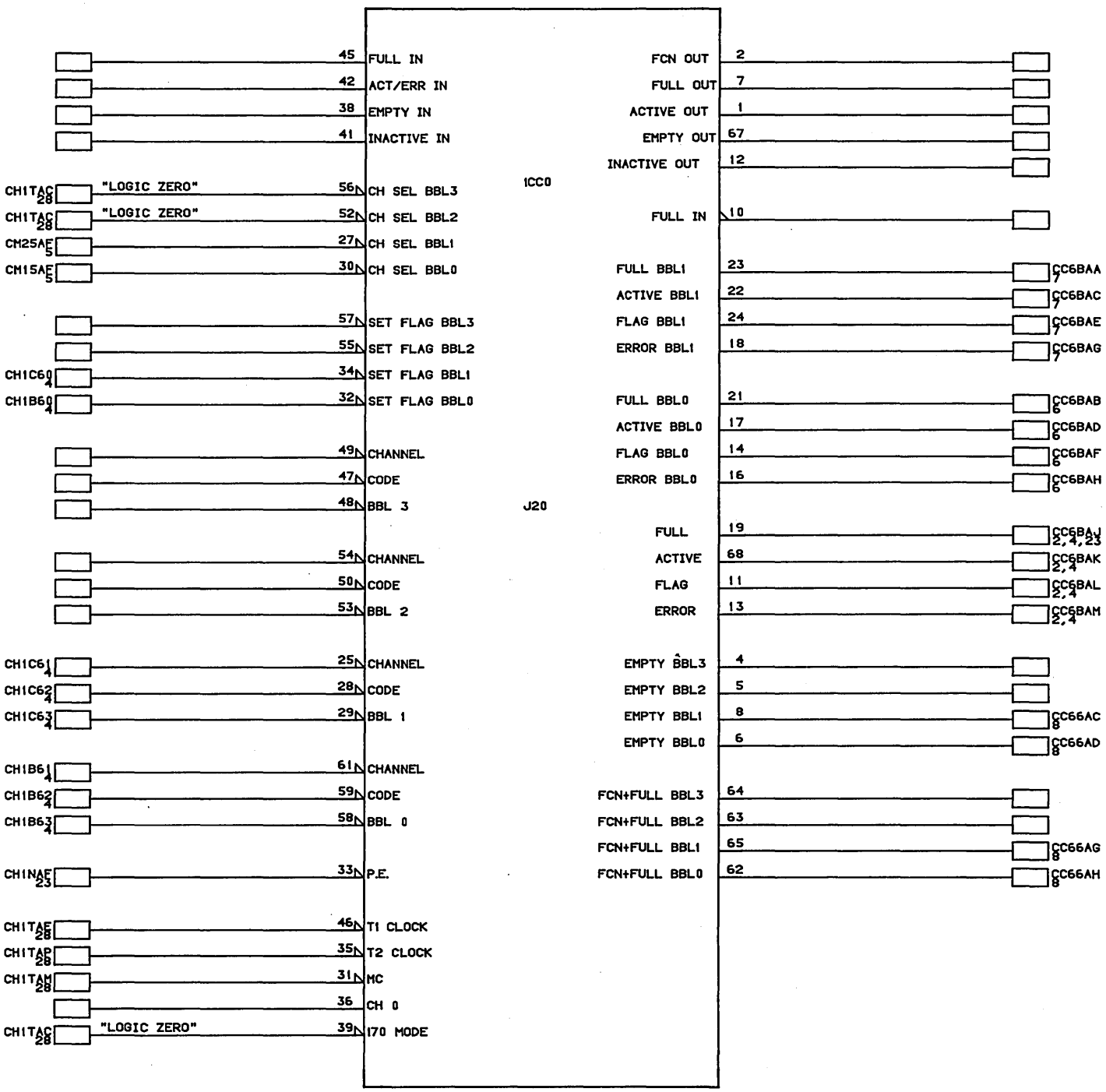

CONTROL DATA CANADA LTD	CHANNEL 05 CONTROL CHIP MODULE ASSY:210 PAK TYPE: 1CH0	C		A
		09-MAR-84	SHEET 34	LOC. D10

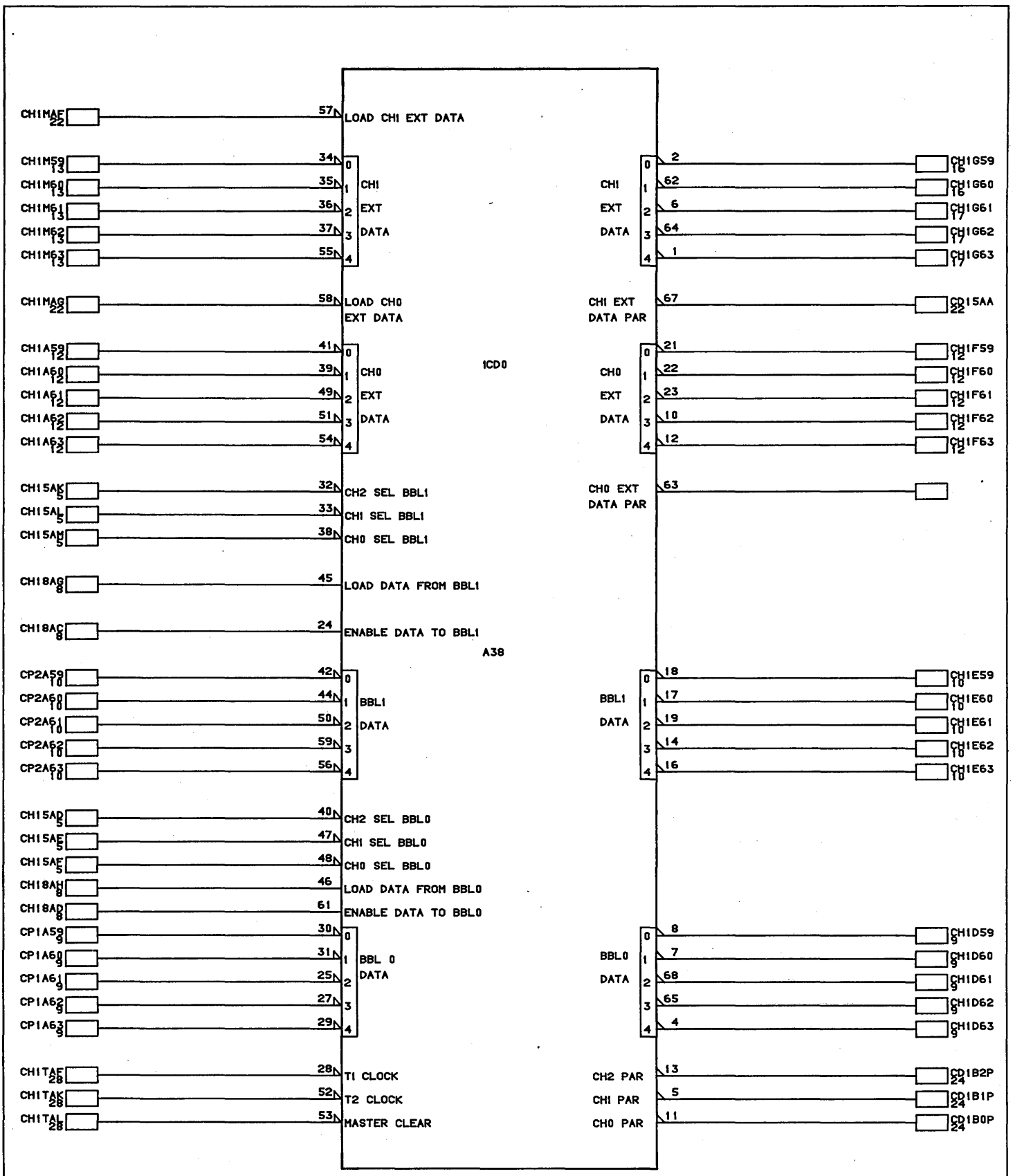

CONTROL DATA CANADA LTD	CHANNEL 00,01,02 DATA CHIP BITS 59-63 MODULE ASSY:210 PAK TYPE: 1CH0	C		A
		09-MAR-84	SHEET 35	LOC. D10

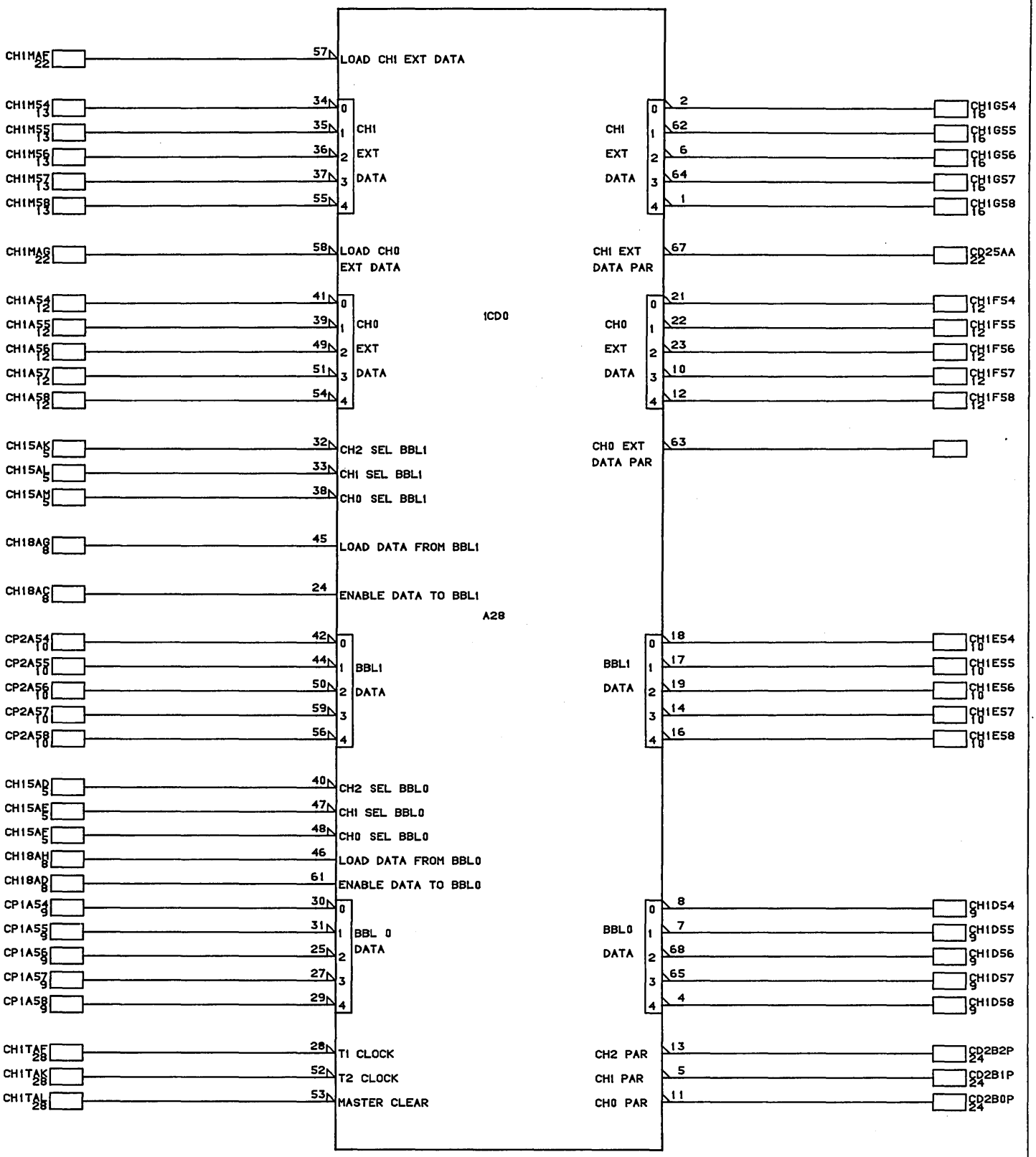

CONTROL DATA CANADA LTD	CHANNELS 00,01,02 DATA CHIP BITS 54-58 MODULE ASSY:210 PAK TYPE: 1CH0	C		A
		09-MAR-84	SHEET 36	LOC. D10

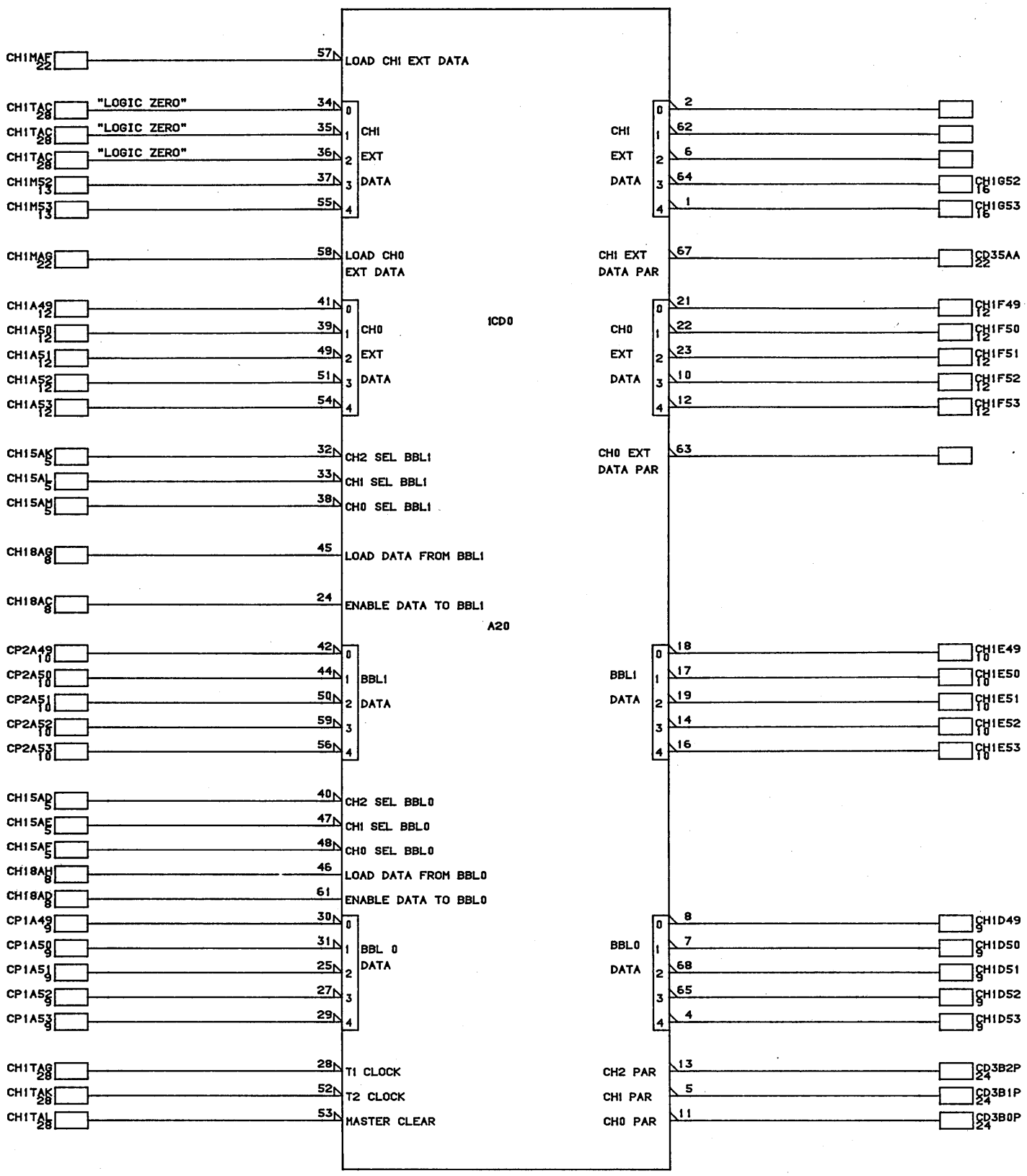

CONTROL DATA CANADA LTD	CHANNEL 00,01,02 DATA CHIP BITS 49-53 MODULE ASSY:210 PAK TYPE: 1CH0	C		A
		09-MAR-84	SHEET 37	LOC. D10

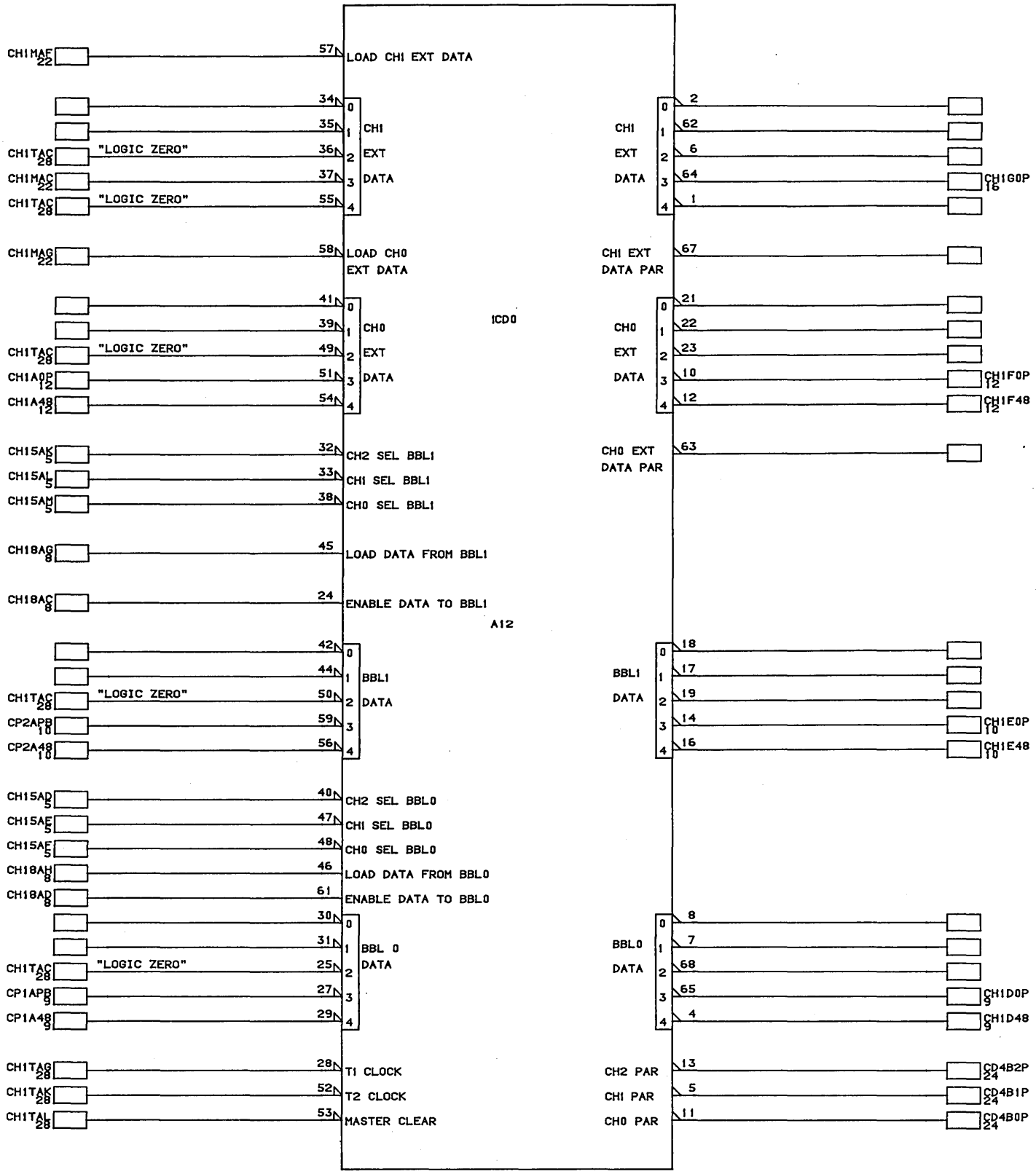

CONTROL DATA CANADA LTD	CHANNEL 00,01,02 DATA CHIP PARITY BIT,BIT 48 MODULE ASSY:210 PAK TYPE: 1CH0	C		A
		09-MAR-84	SHEET 38	LOC. D10

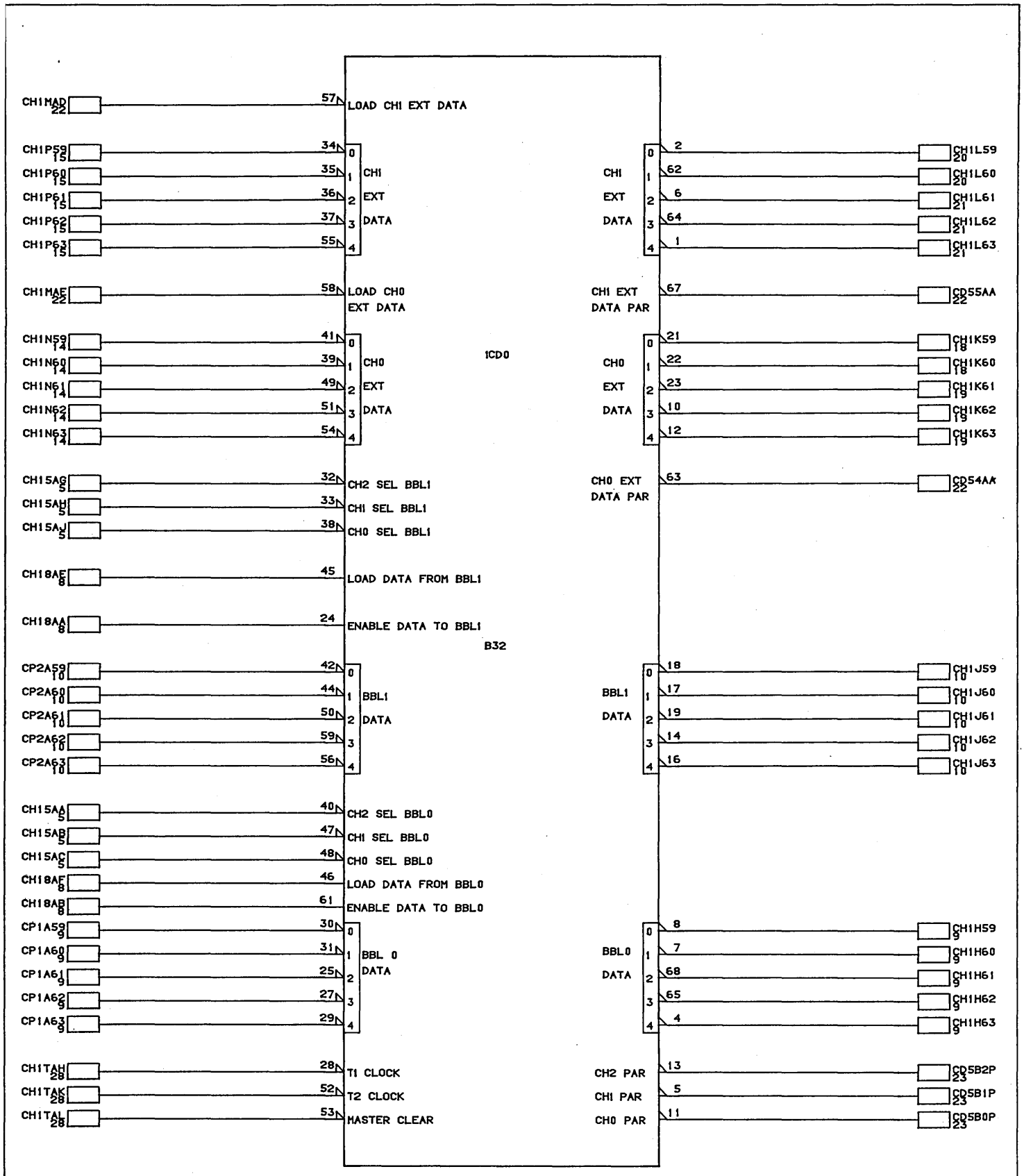

CONTROL DATA CANADA LTD	CHANNEL 03,04,05 DATA CHIP BITS 59-63 MODULE ASSY:210 PAK TYPE: 1CH0	C		A
		09-MAR-84	SHEET 39	LOC. D10

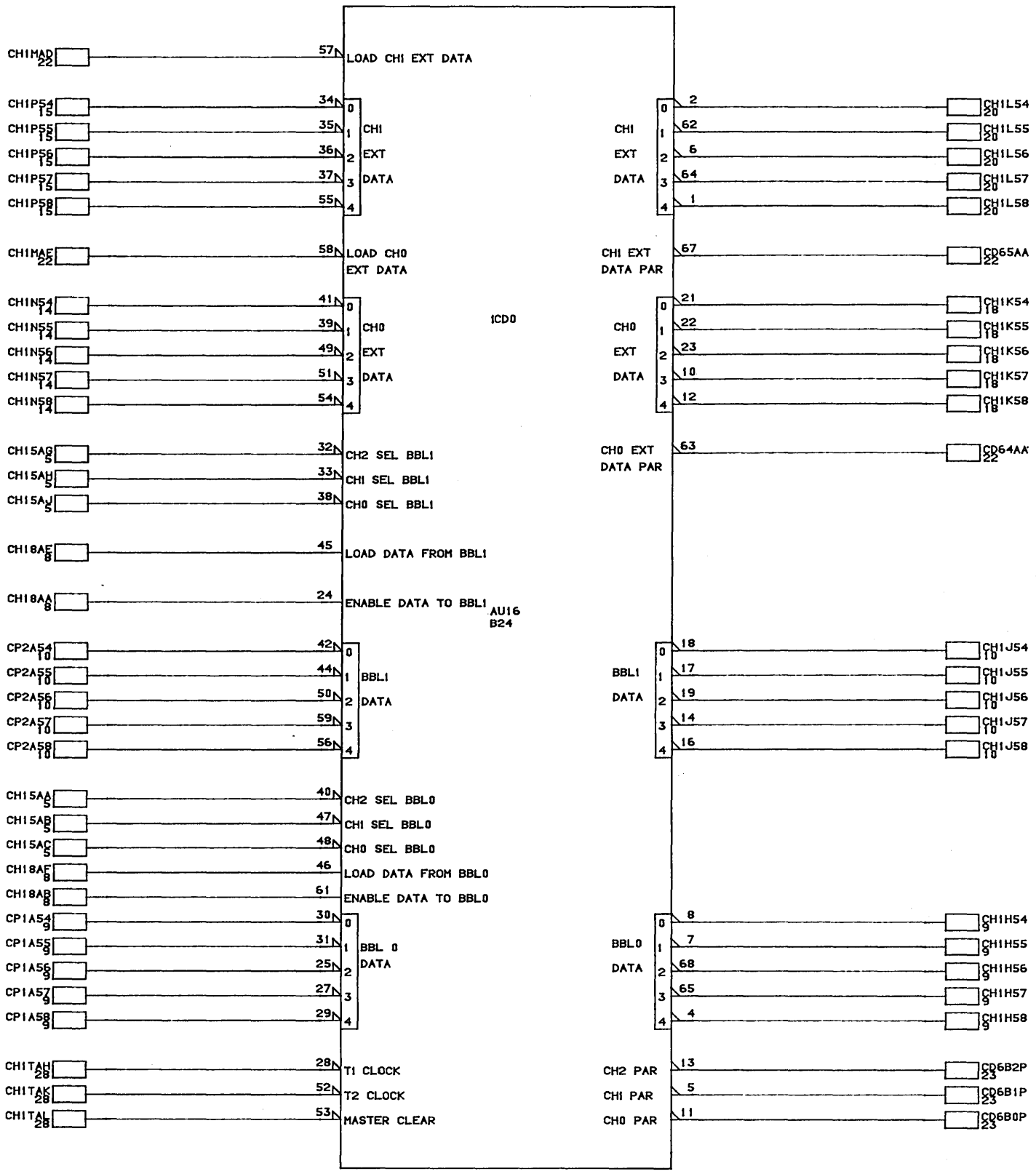

CONTROL DATA CANADA LTD	CHANNEL 03,04,05 DATA CHIP BITS 54-58 MODULE ASSY: 210 PAK TYPE: 1CH0	C		A
		08-MAR-84	SHEET 40	LOC. D10

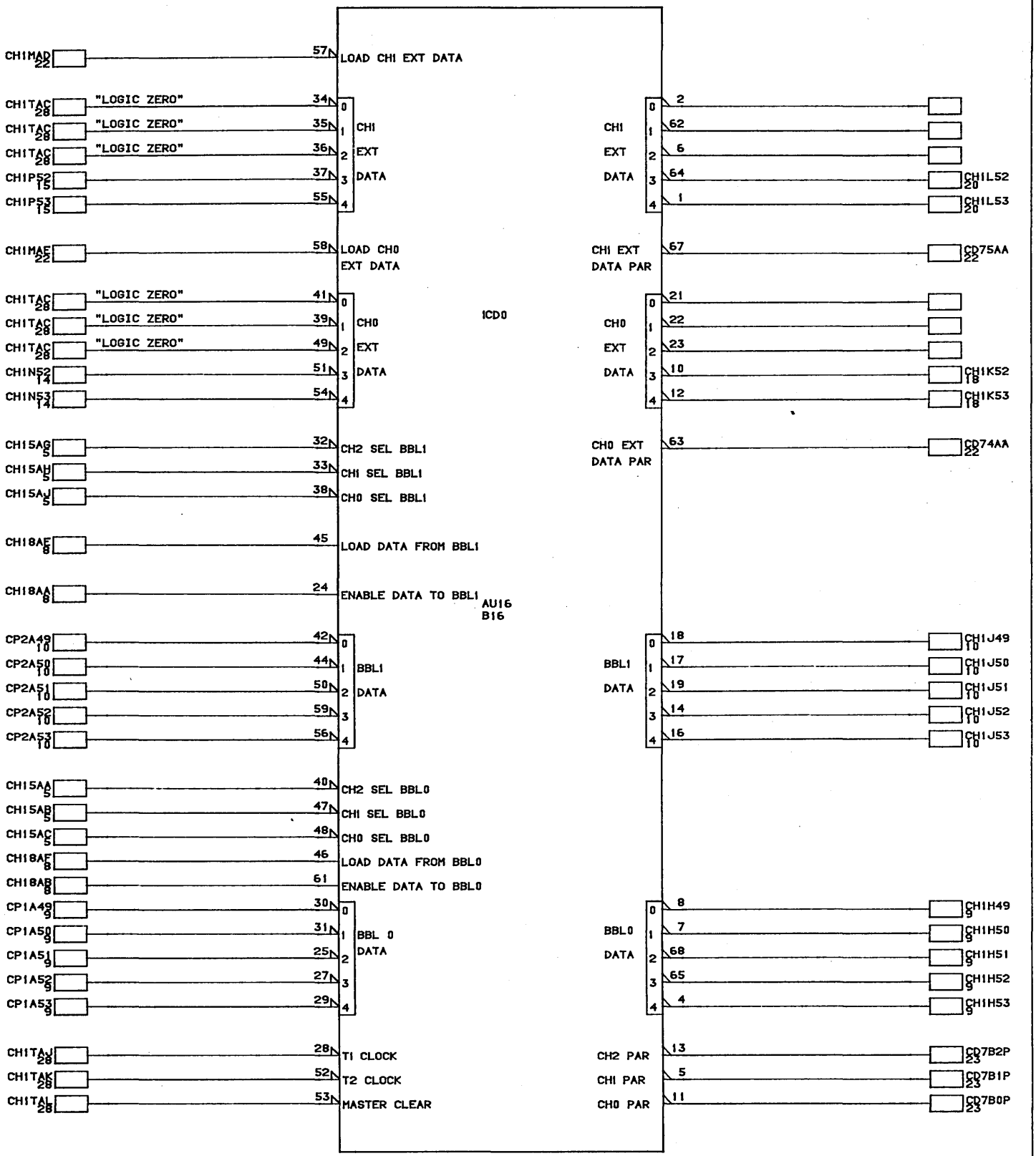

CONTROL DATA CANADA LTD	CHANNEL 03,04,05 DATA CHIP BITS 49-53 MODULE ASSY:210 PAK TYPE: 1CH0		C	A
		08-MAR-84	SHEET 41	LOC. D10

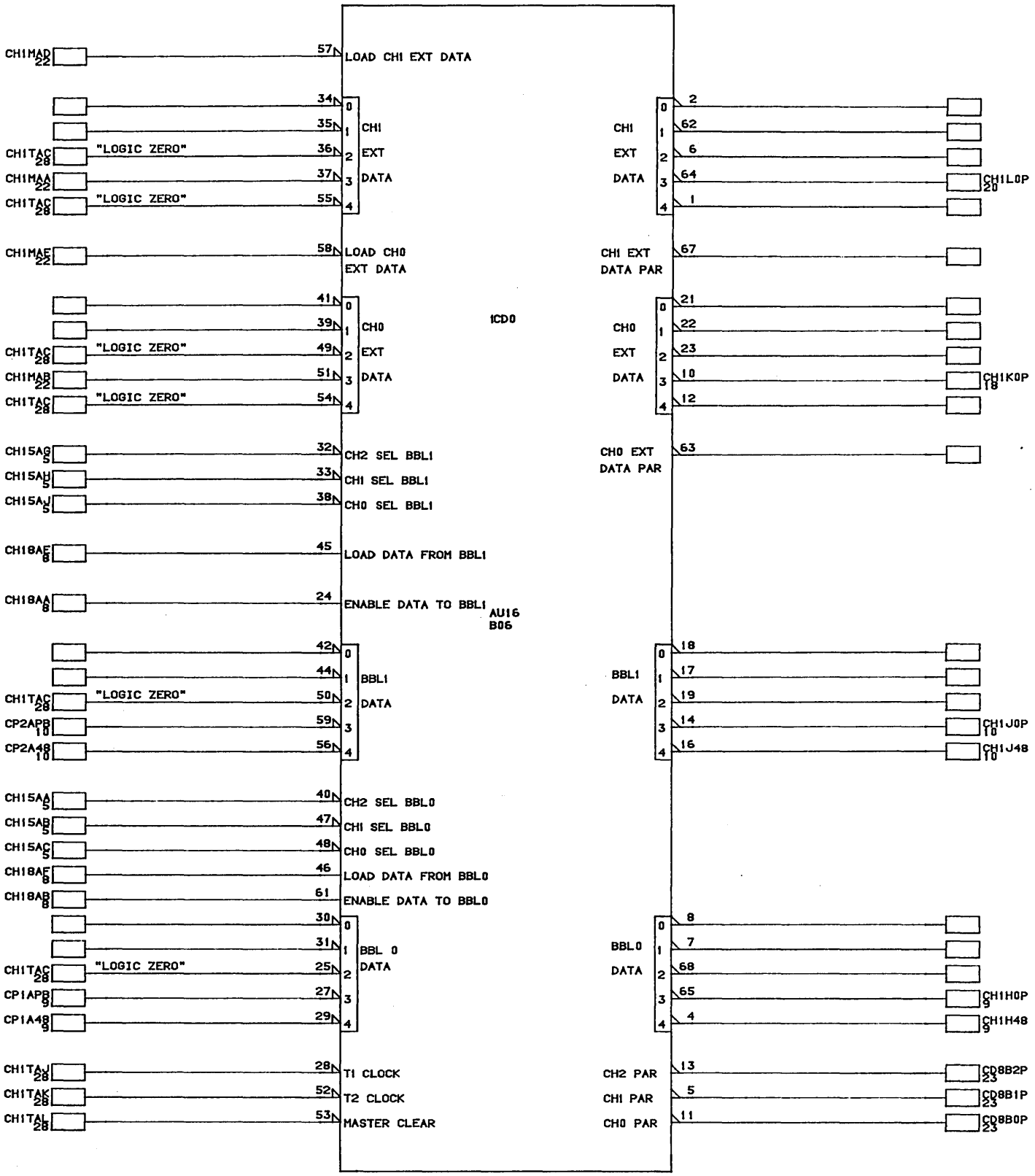

CONTROL DATA CANADA LTD	CHANNEL 03,04,05 DATA CHIP PARITY BIT,BIT 48 MODULE ASSY:210 PAK TYPE: 1CH0	C		A
		08-MAR-84	SHEET 42	LOC. D10

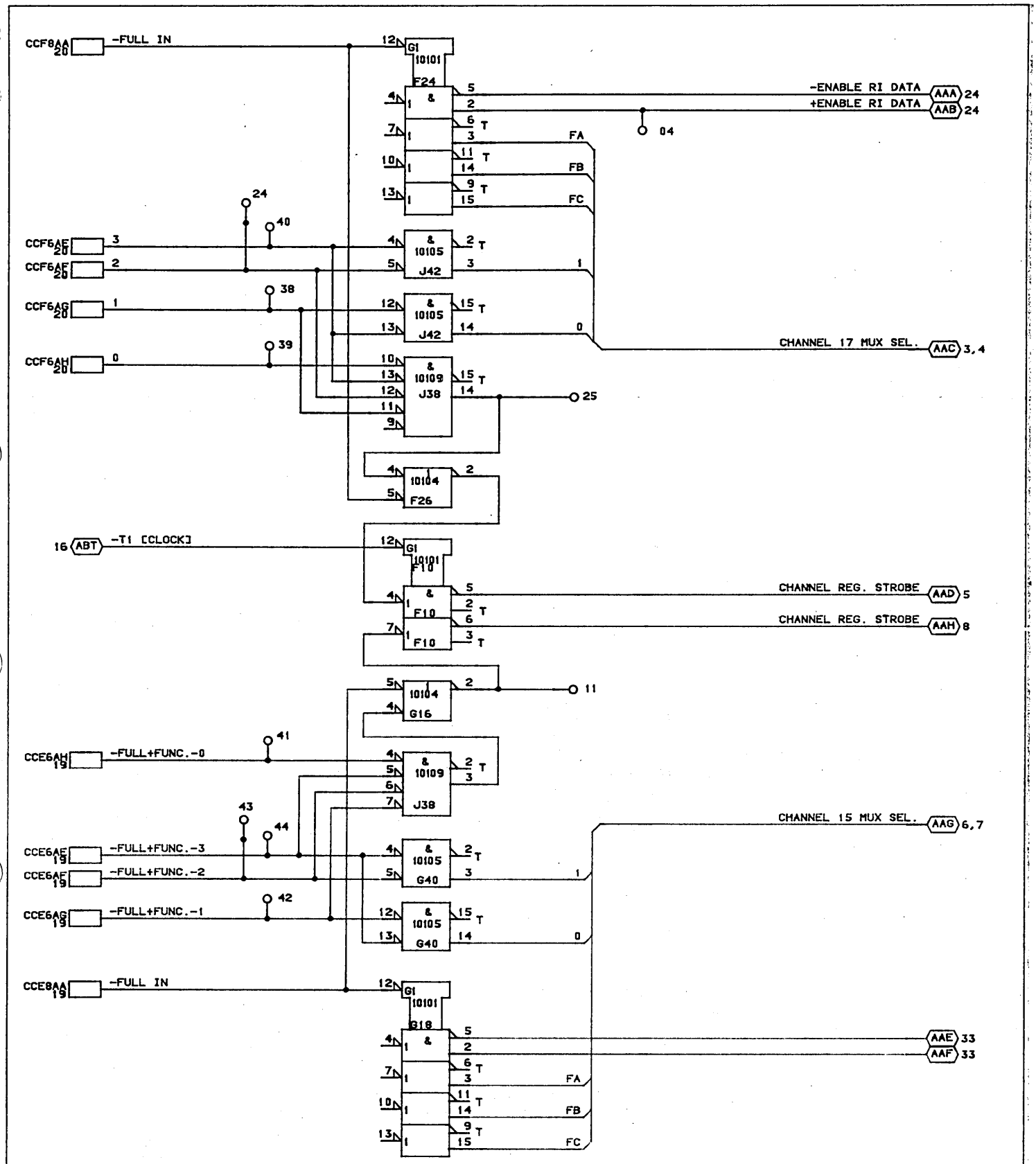

CONTROL DATA CANADA LTD	CHANNEL 15 AND 17 INPUT MUX CONTROLS MODULE ASSY:210 PAK TYPE: 1CJ0	C		
		22-JAN-84	SHEET 02	LOC. D08

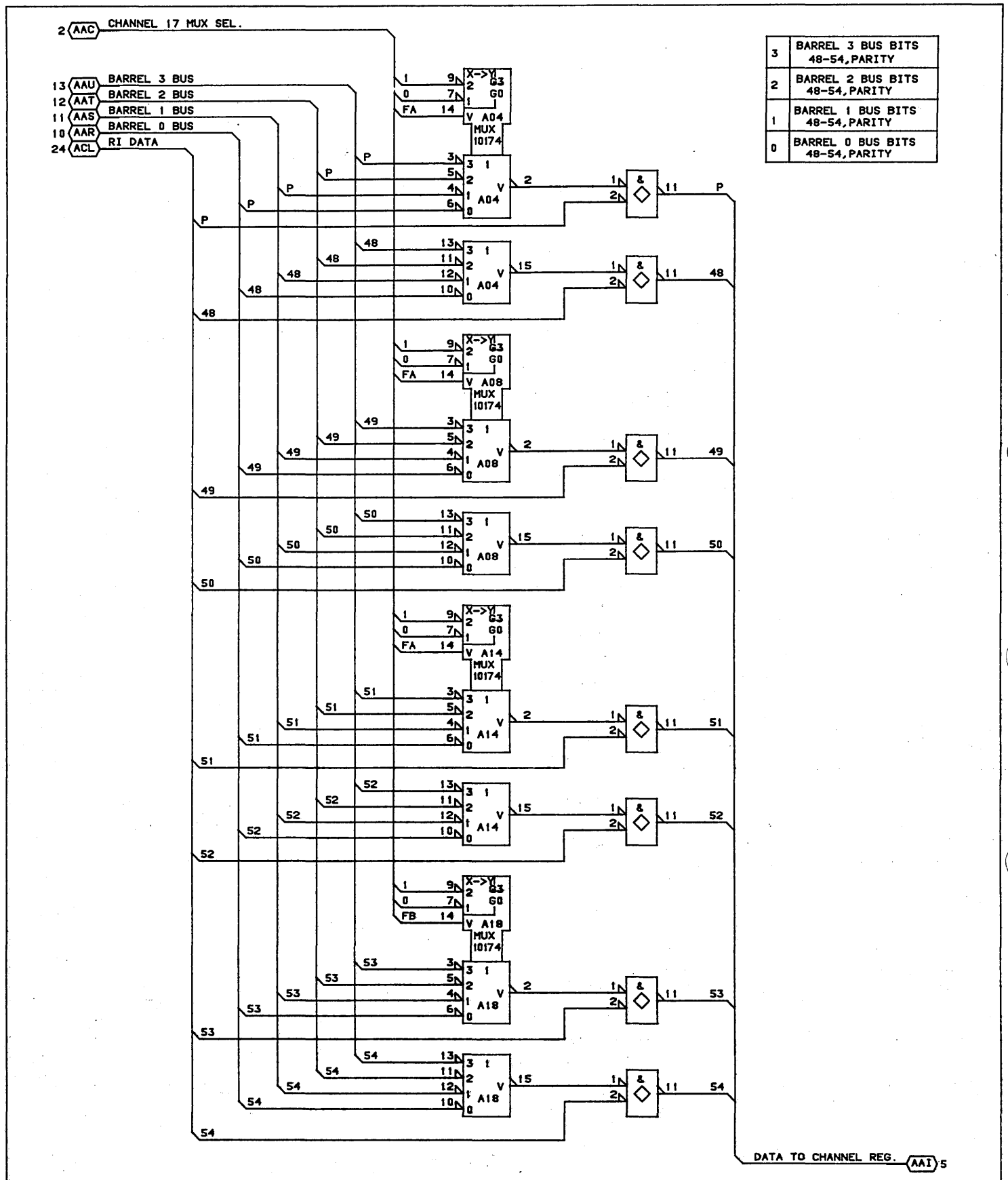

3	BARREL 3 BUS BITS 48-54,PARITY
2	BARREL 2 BUS BITS 48-54,PARITY
1	BARREL 1 BUS BITS 48-54,PARITY
0	BARREL 0 BUS BITS 48-54,PARITY

CONTROL DATA CANADA LTD	CHANNEL 17 INPUT MUX BITS 48-54,P MODULE ASSY:210 PAK TYPE: 1CJ0	C		A
		22-JAN-84	SHEET 03	LOC. D08

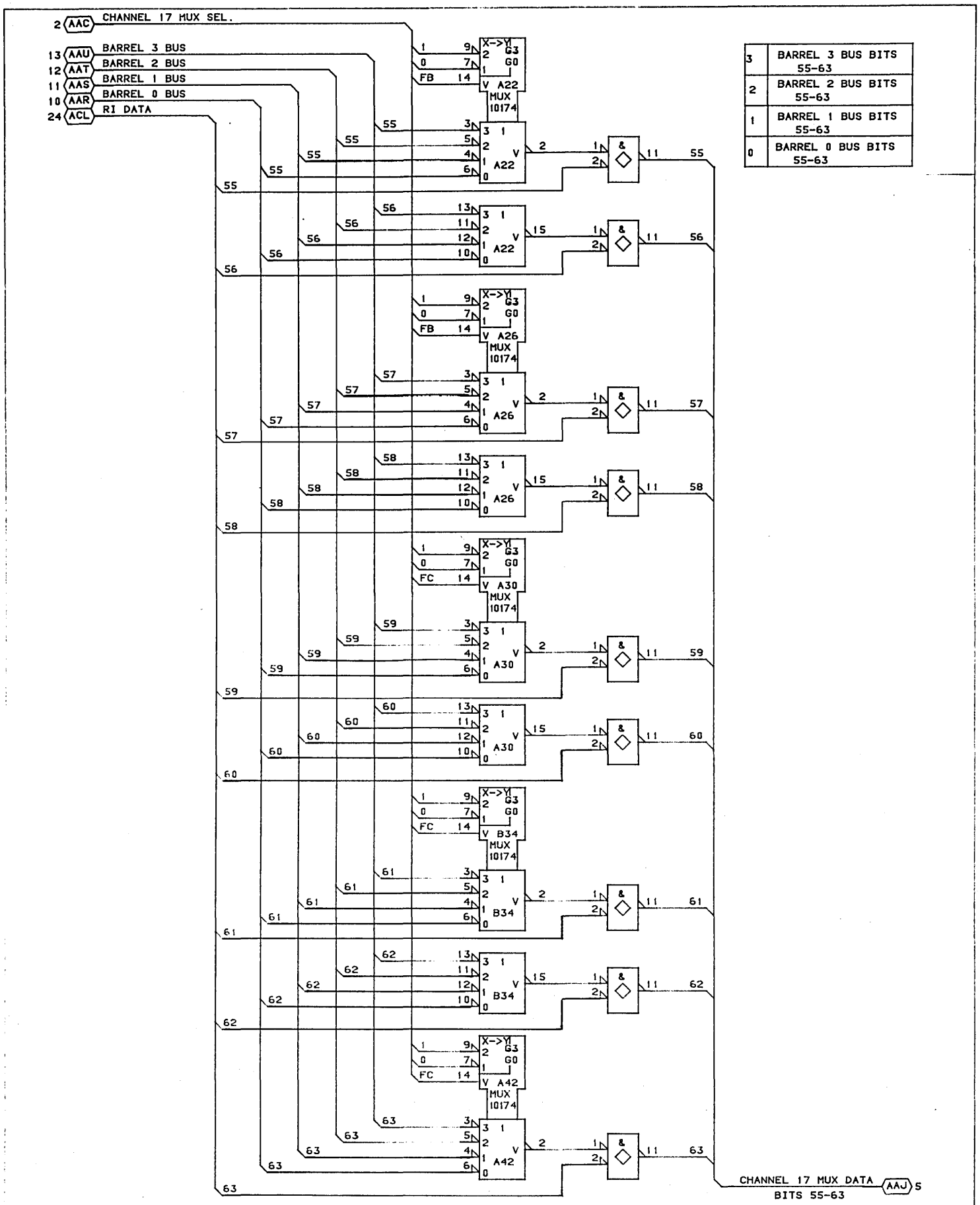

CONTROL DATA CANADA LTD	CHANNEL 17 MUX DATA BITS 55-63 MODULE ASSY:210 PAK TYPE: 1CJ0	C	A
		22-JAN-84	SHEET 04 LOC. D08

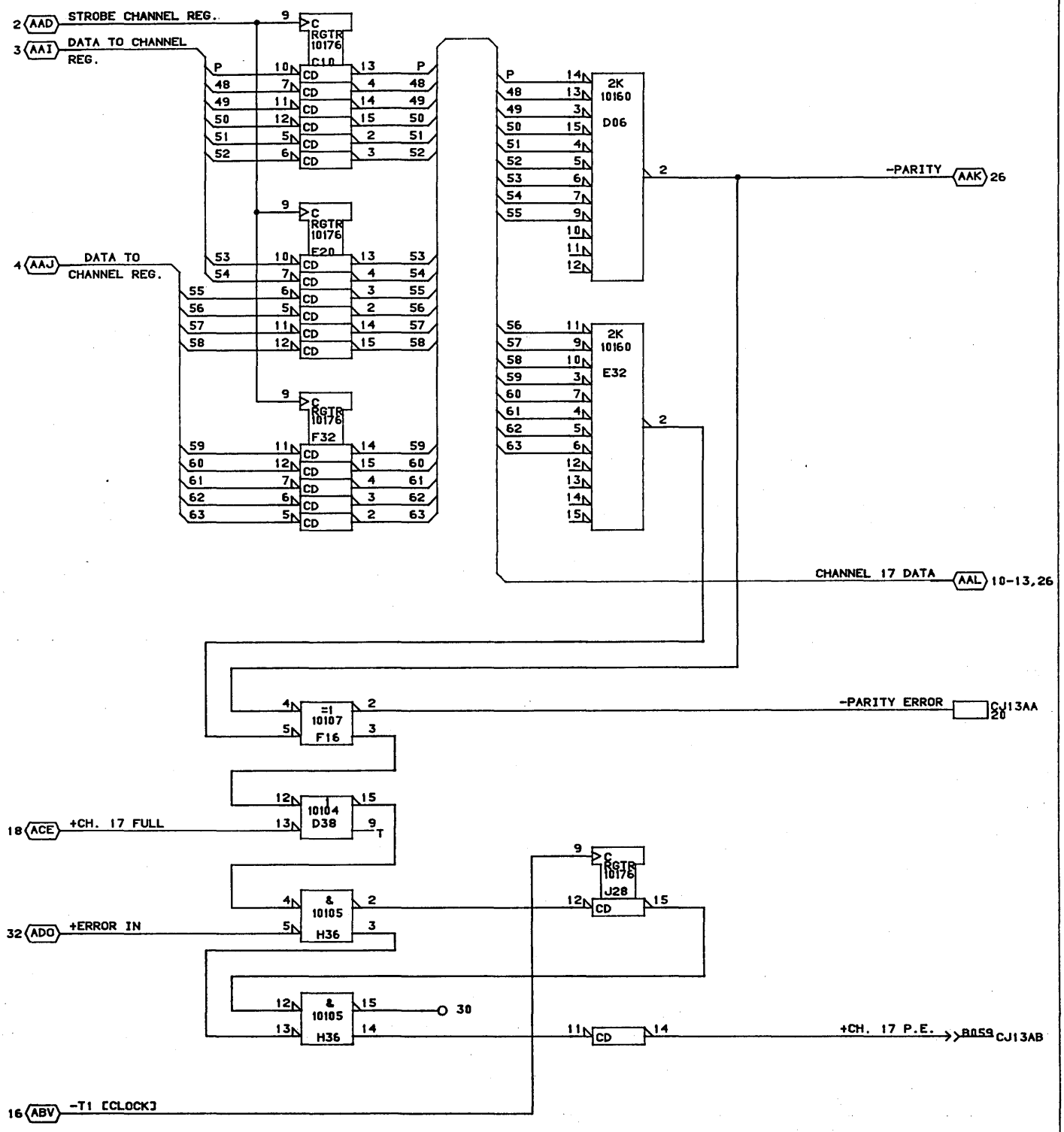

CONTROL DATA CANADA LTD	CHANNEL 17 DATA REG. AND CHAN. 17 PARITY MODULE ASSY:210 PAK TYPE: 1CJ0	C		
		22-JAN-84	SHEET 05	LOC. D08

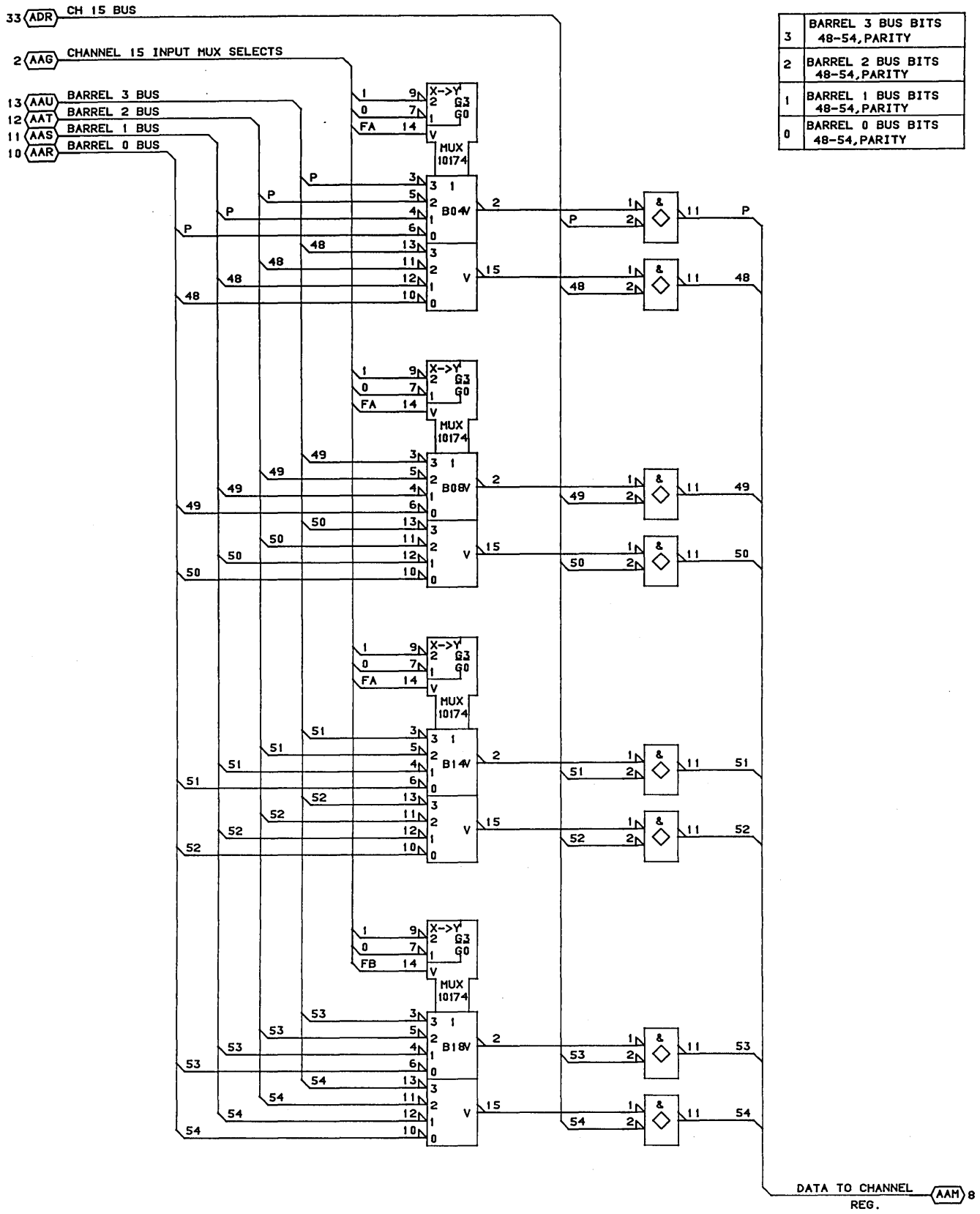

3	BARREL 3 BUS BITS 48-54,PARITY
2	BARREL 2 BUS BITS 48-54,PARITY
1	BARREL 1 BUS BITS 48-54,PARITY
0	BARREL 0 BUS BITS 48-54,PARITY

CONTROL DATA CANADA LTD	CHANNEL 15 INPUT MUX MODULE ASSY:210 PAK TYPE: 1CJ0		C	
		22-JAN-84	SHEET 06	LOC. D08

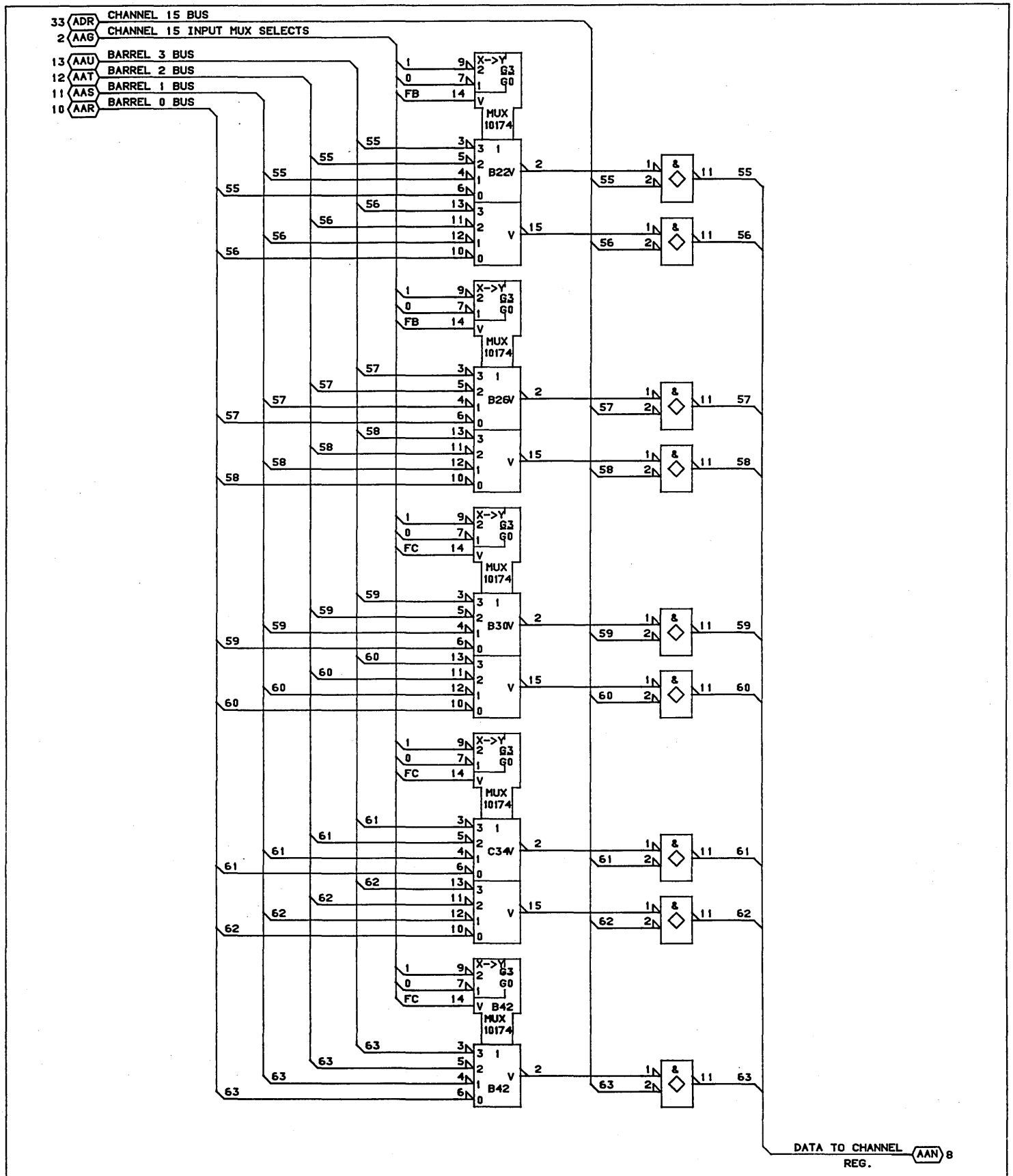

CONTROL DATA CANADA LTD	CHANNEL 15 INPUT MUX MODULE ASSY:210 PAK TYPE: 1CJ0	C		
		22-JAN-84	SHEET 07	LOC. D08

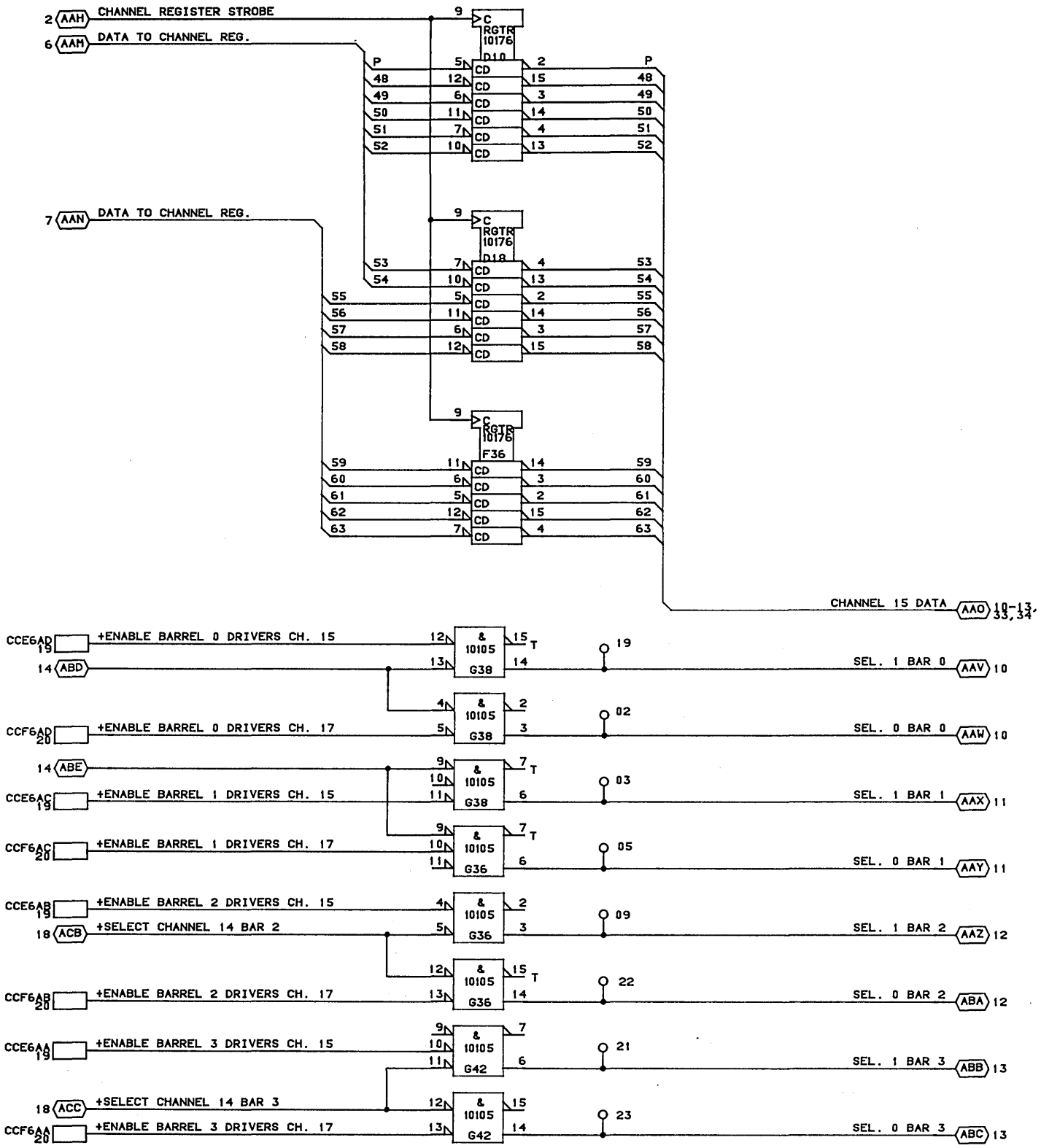

CONTROL DATA CANADA LTD	CHANNEL 15 INPUT DATA REG.	C		
	MODULE ASSY:210 PAK			
	TYPE: 1CJ0	22-JAN-84	SHEET 08	LOC. D08

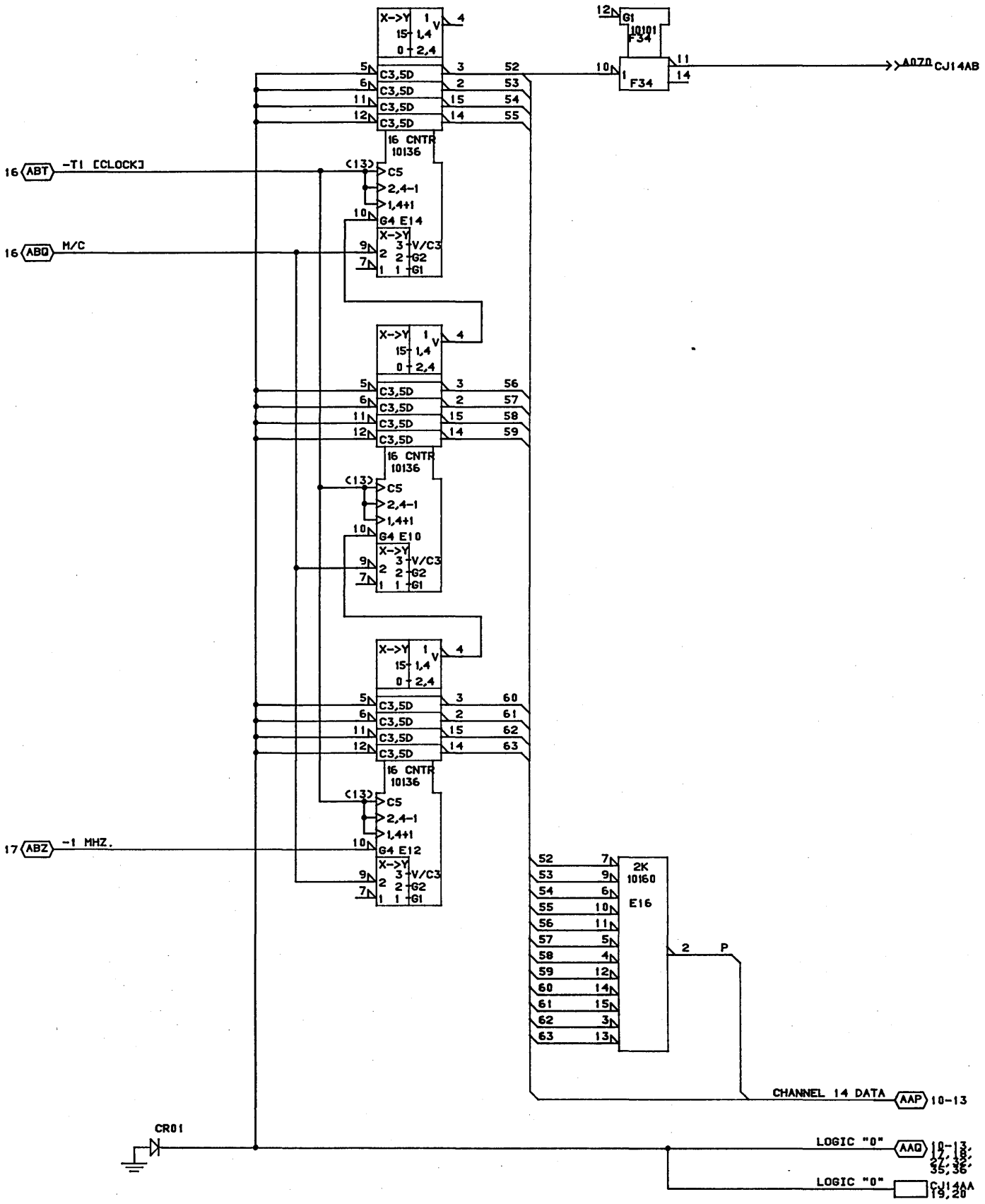

CONTROL DATA CANADA LTD	CHANNEL 14 REAL TIME CLOCK MODULE ASSY:210 PAK TYPE: 1CJ0		C		A
		22-JAN-84	SHEET 09	LOC. D08	

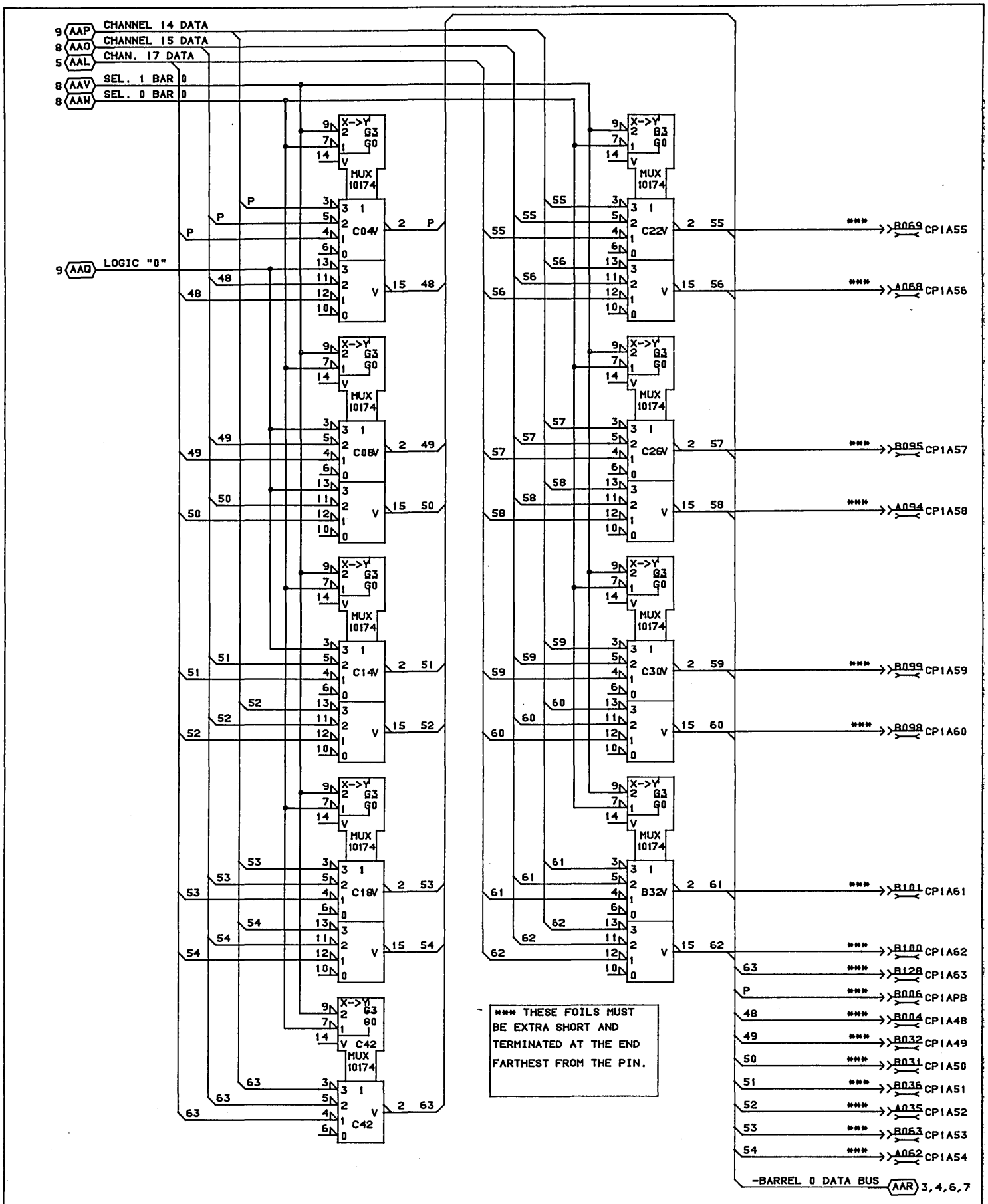

CONTROL DATA CANADA LTD	BARREL 0 OUTPUT MUX AND DRIVERS MODULE ASSY:210 PAK TYPE: 1CJ0	C		A
		22-JAN-84	SHEET 10	LOC. D08

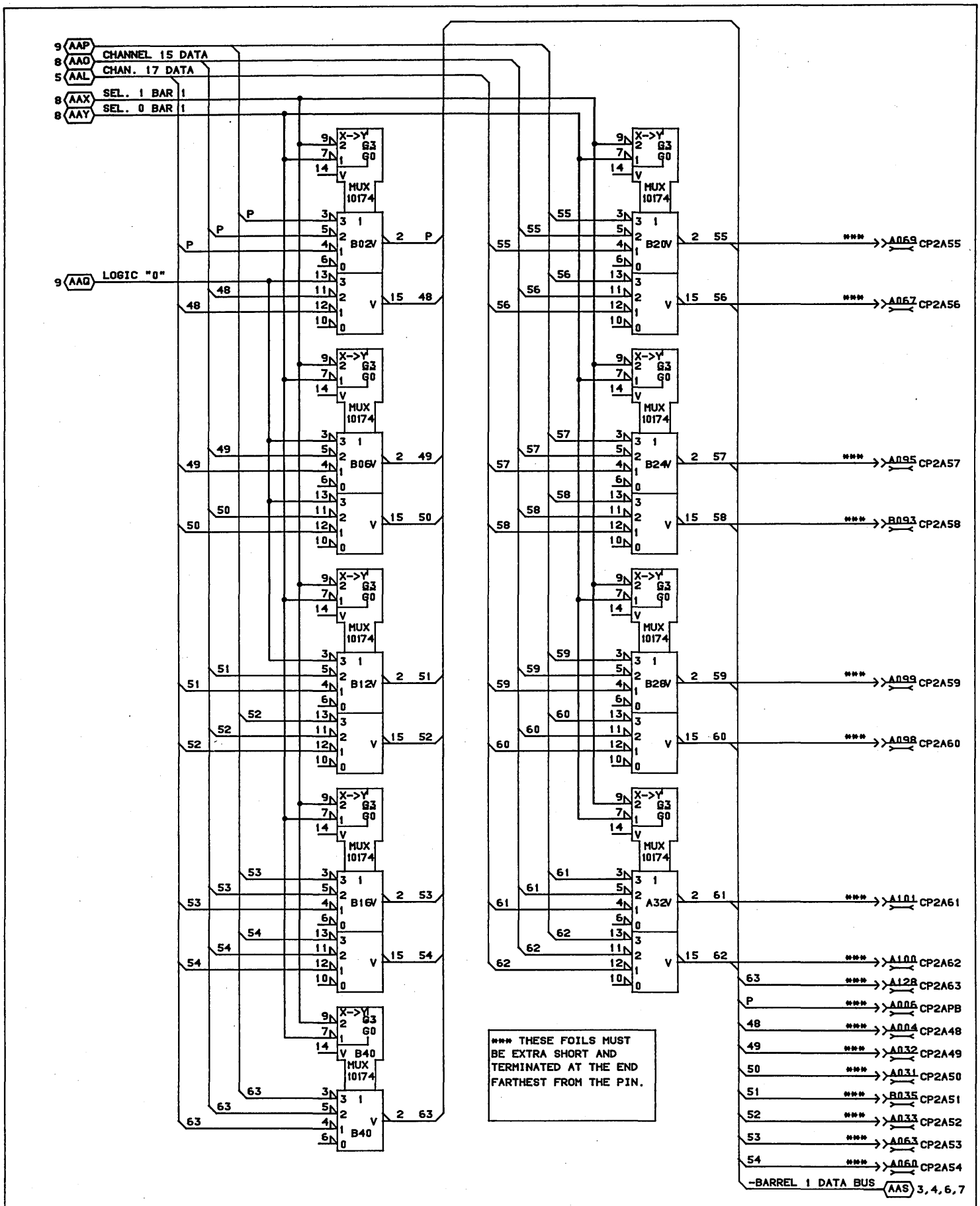

CONTROL DATA CANADA LTD	BARREL 1 OUTPUT MUX AND DRIVERS MODULE ASSY:210 PAK TYPE: 1CJ0	C		A
		22-JAN-84	SHEET 11	LOC. D08

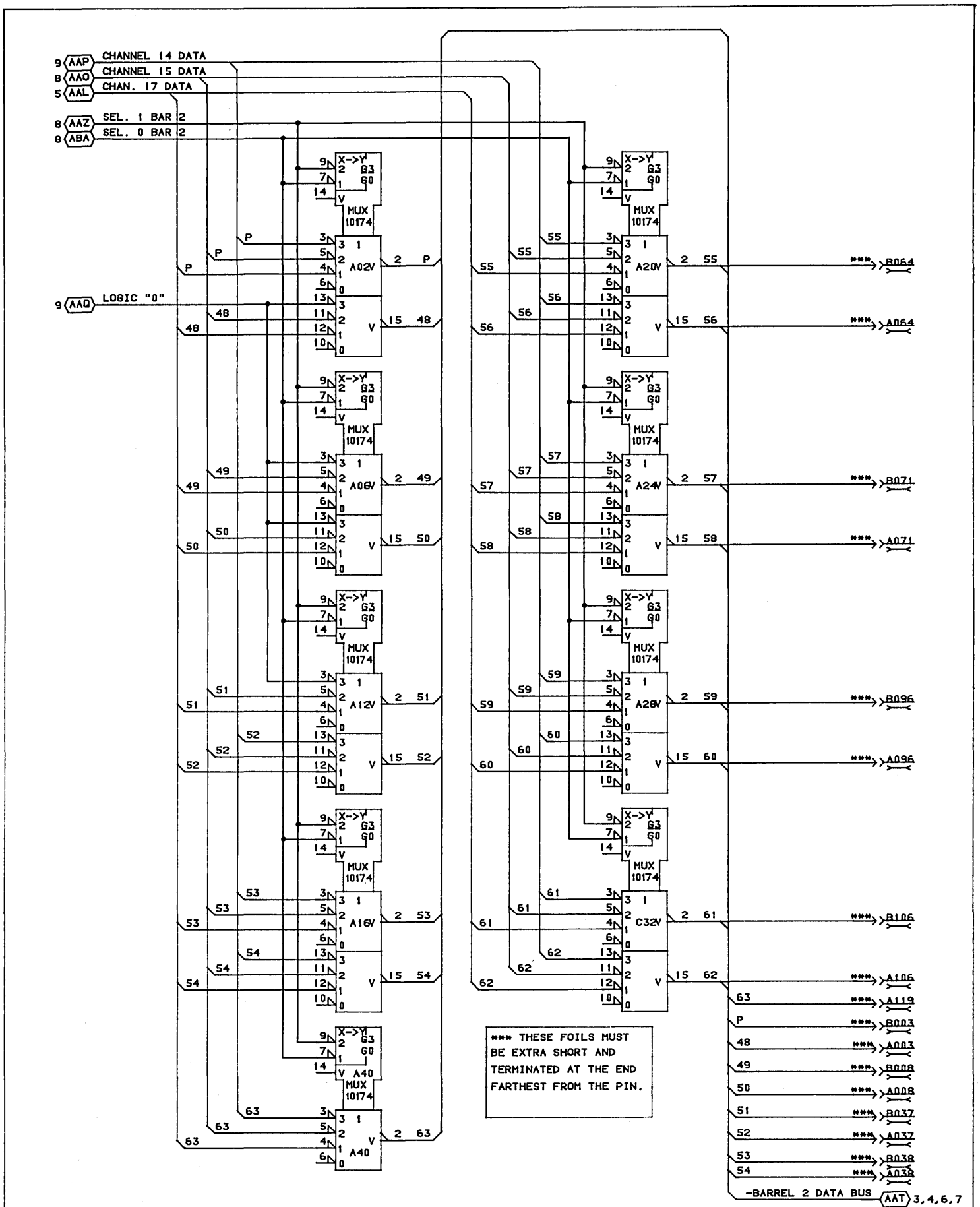

CONTROL DATA CANADA LTD	BARREL 2 OUTPUT MUX AND DRIVERS MODULE ASSY:210 PAK TYPE: 1CJ0	C		
		22-JAN-84	SHEET 12	LOC. D08

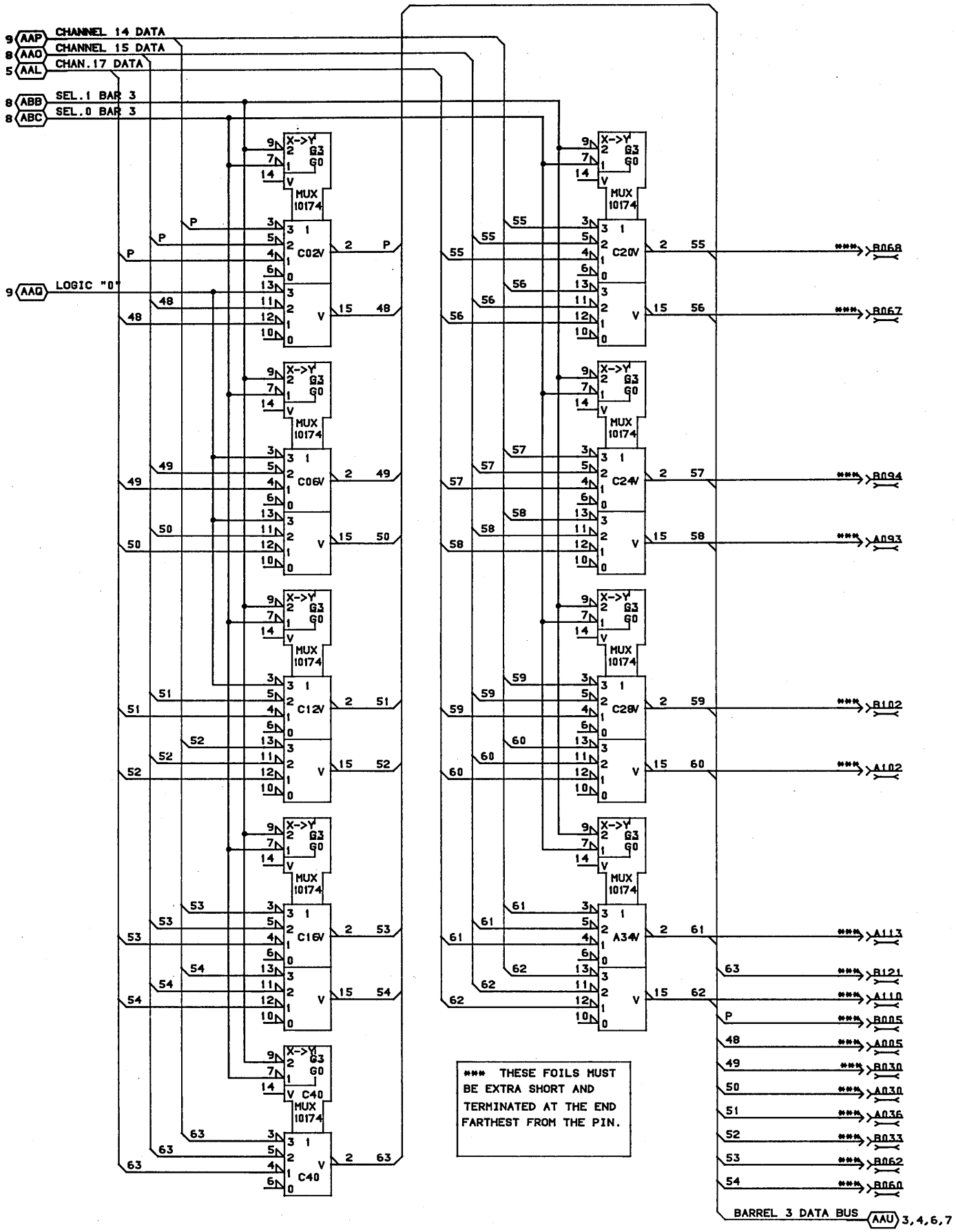

*** THESE FOILS MUST BE EXTRA SHORT AND TERMINATED AT THE END FARTHEST FROM THE PIN.

CONTROL DATA CANADA LTD	BARREL 3 OUTPUT MUX AND DRIVERS MODULE ASSY:210 PAK TYPE: 1CJ0	C		1
		22-JAN-84	SHEET 13	LOC. D08

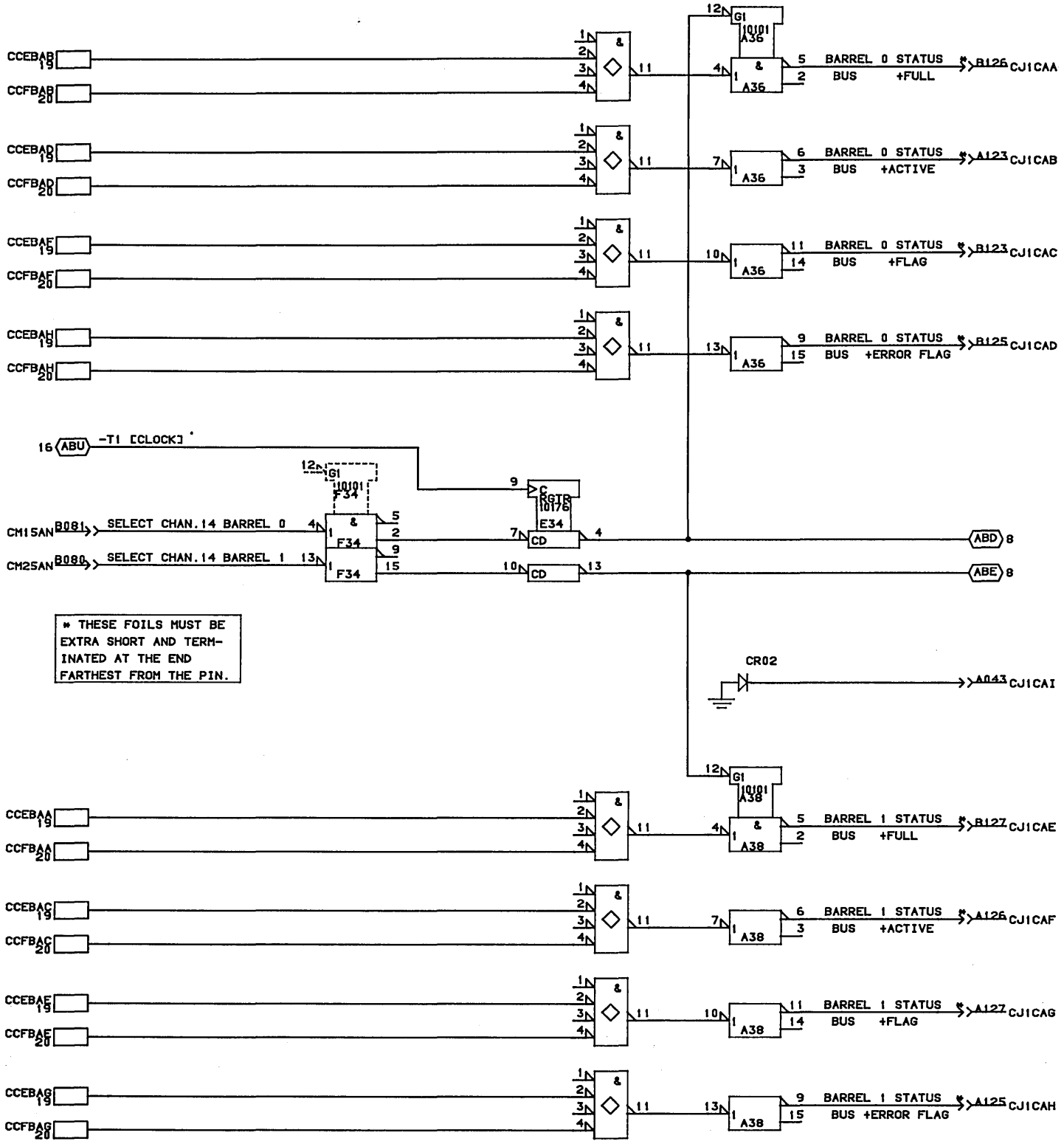

CONTROL DATA CANADA LTD	BARRELS 0 AND 1 STATUS BUS MODULE ASSY:210 PAK TYPE: 1CJ0	C		
		22-JAN-84	SHEET 14	LOC. D08

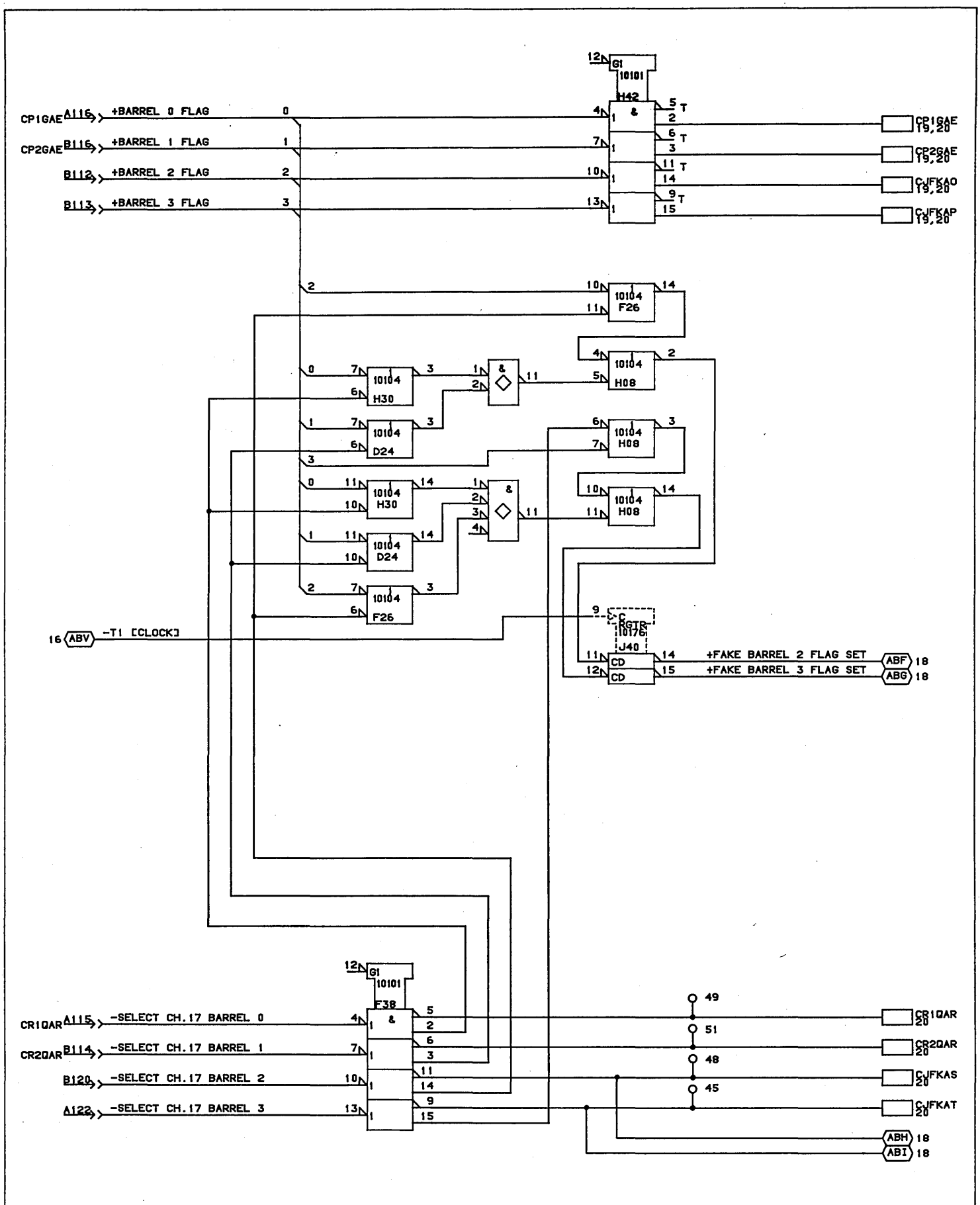

CONTROL DATA CANADA LTD	MCH FLAG CONFLICT RESOLUTION MODULE ASSY:210 PAK TYPE: 1CJ0	C		A
		22-JAN-84	SHEET 15	LOC. D08

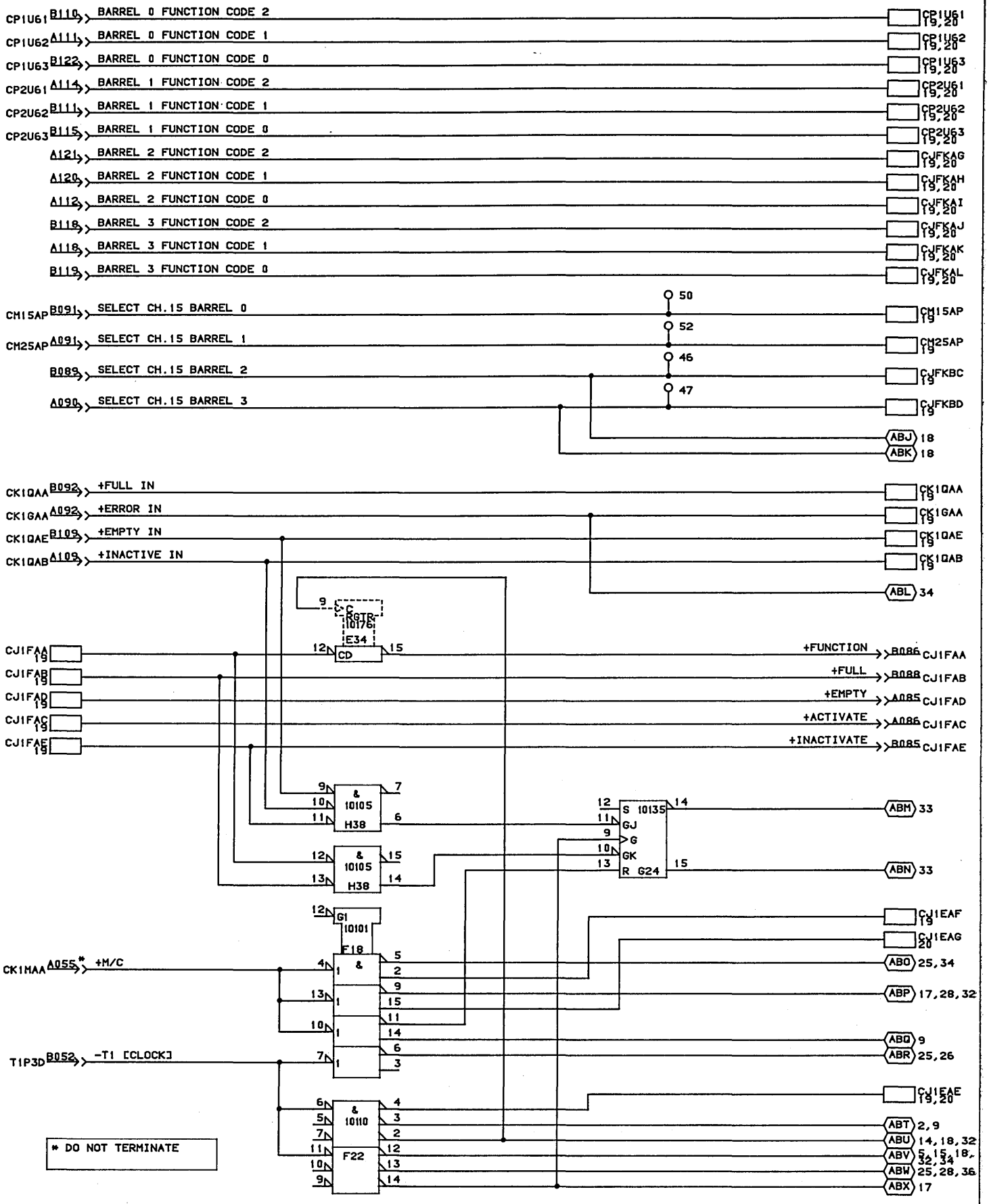

CONTROL DATA CANADA LTD	T1 AND M/C FANOUT CHANNEL CONTROLS MODULE ASSY:210 PAK TYPE: 1CJ0	C		
		22-JAN-84	SHEET 16	LOC. D08

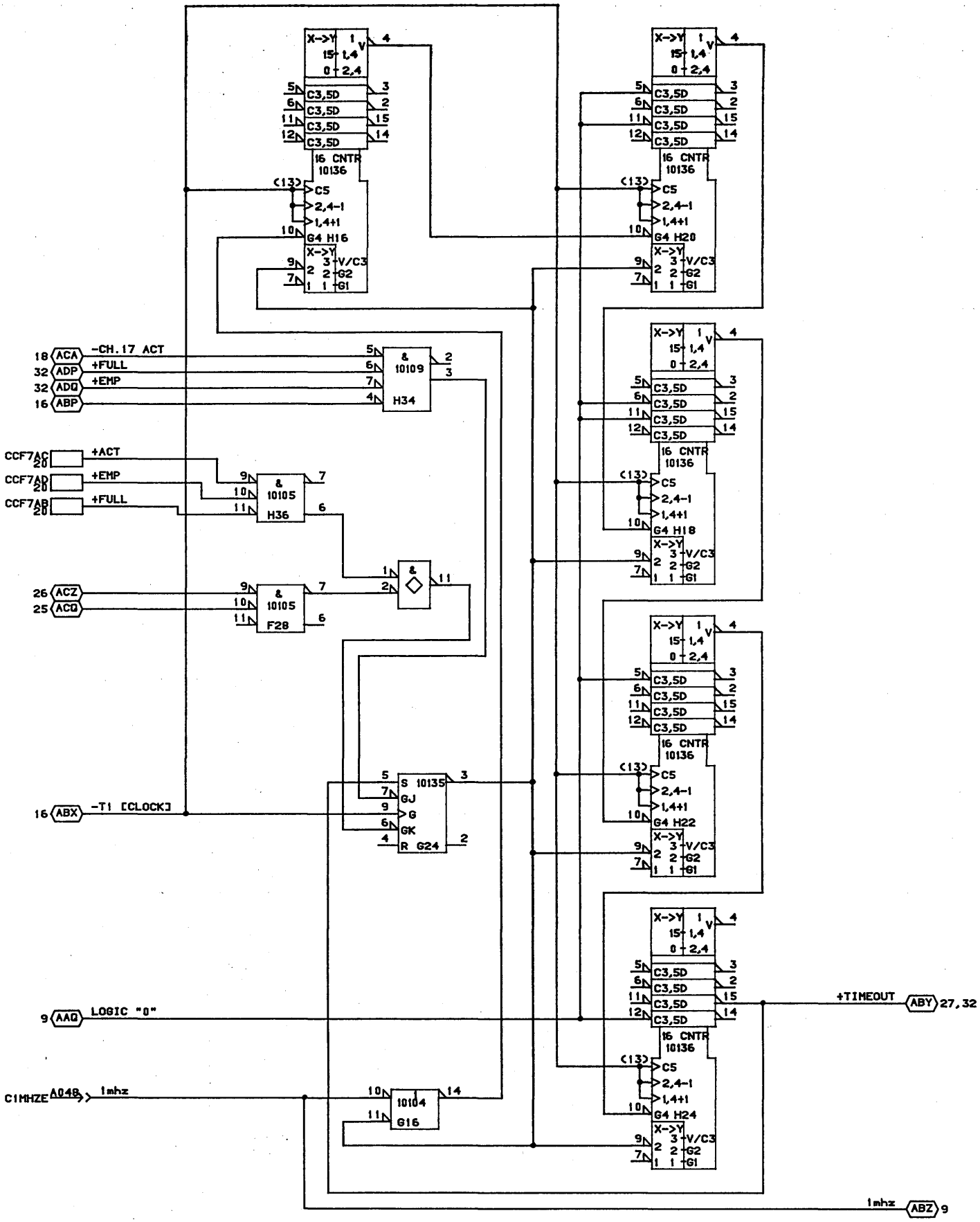

CONTROL DATA CANADA LTD	TIMEOUT CCT MODULE ASSY:210 PAK TYPE: 1CJ0	C		
		22-JAN-84	SHEET 17	LOC. D08

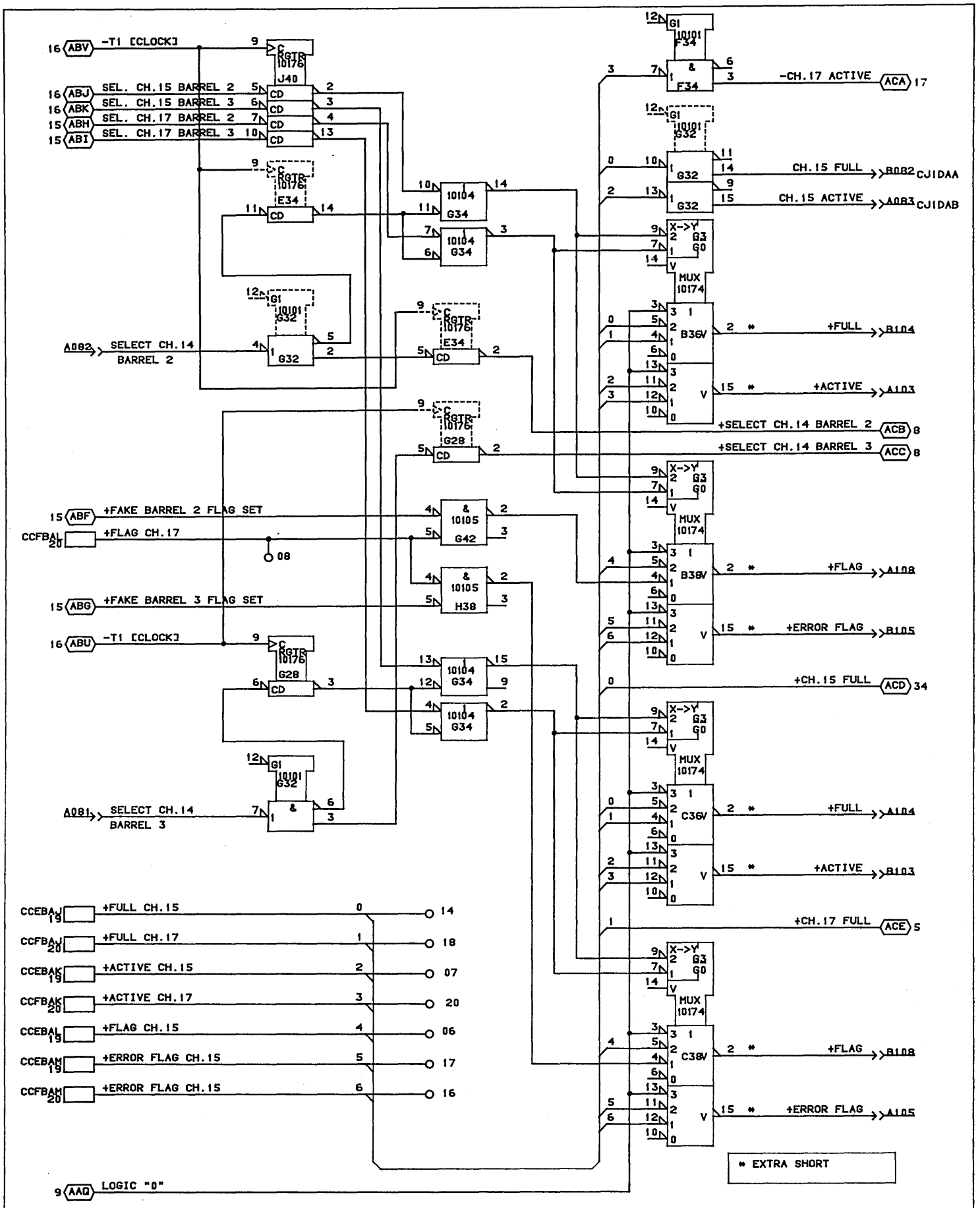

CONTROL DATA CANADA LTD	BARREL 2 AND 3 STATUS BUS MODULE ASSY:210 PAK TYPE: 1CJ0	C		A
		22-JAN-84	SHEET 18	LOC. D08

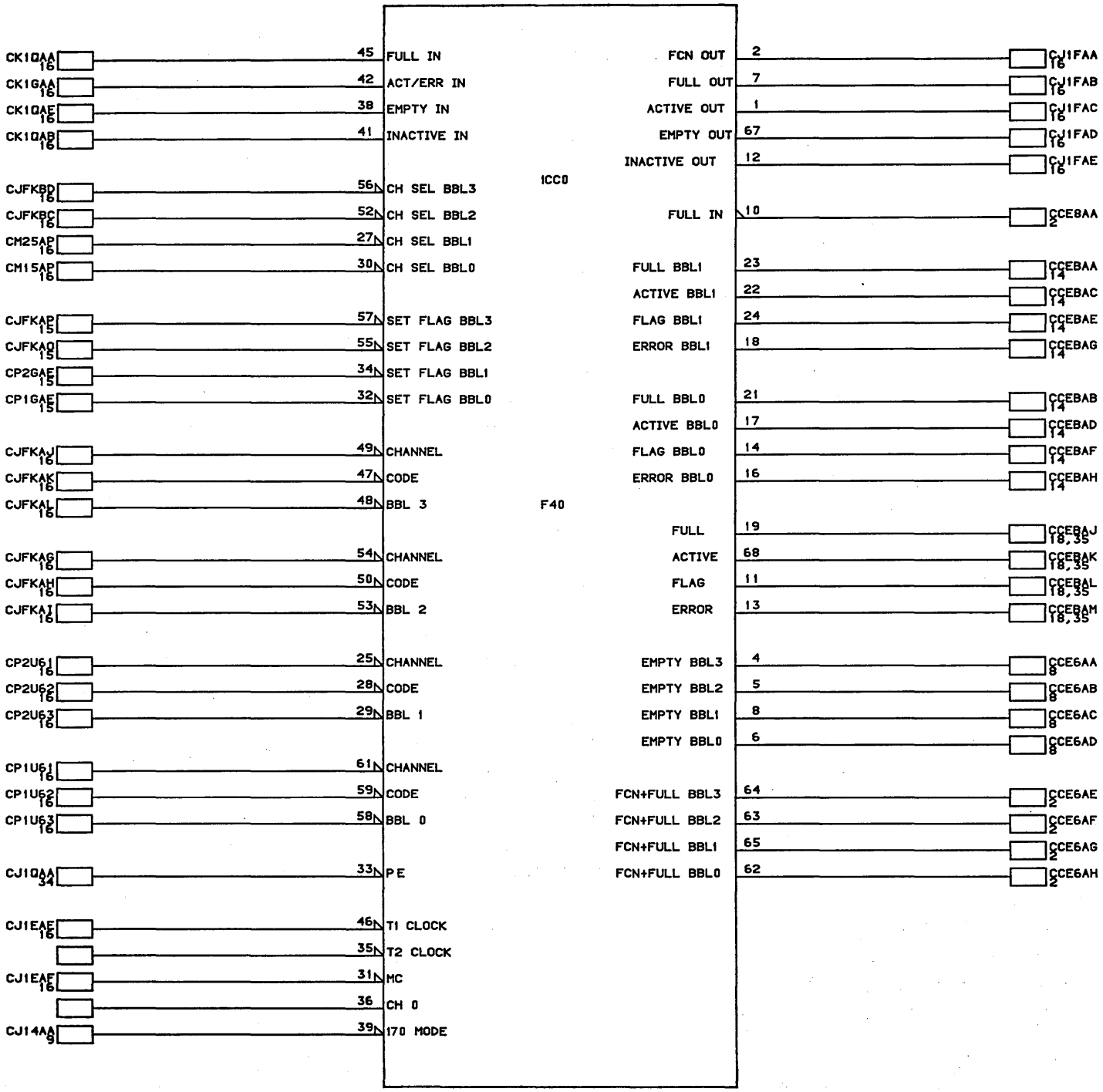

CONTROL DATA CANADA LTD	CHANNEL 15 CONTROL MACROCELL MODULE ASSY 210 PAK TYPE: 1CJ0	C		A
		22-JAN-84	SHEET 19	LOC D08

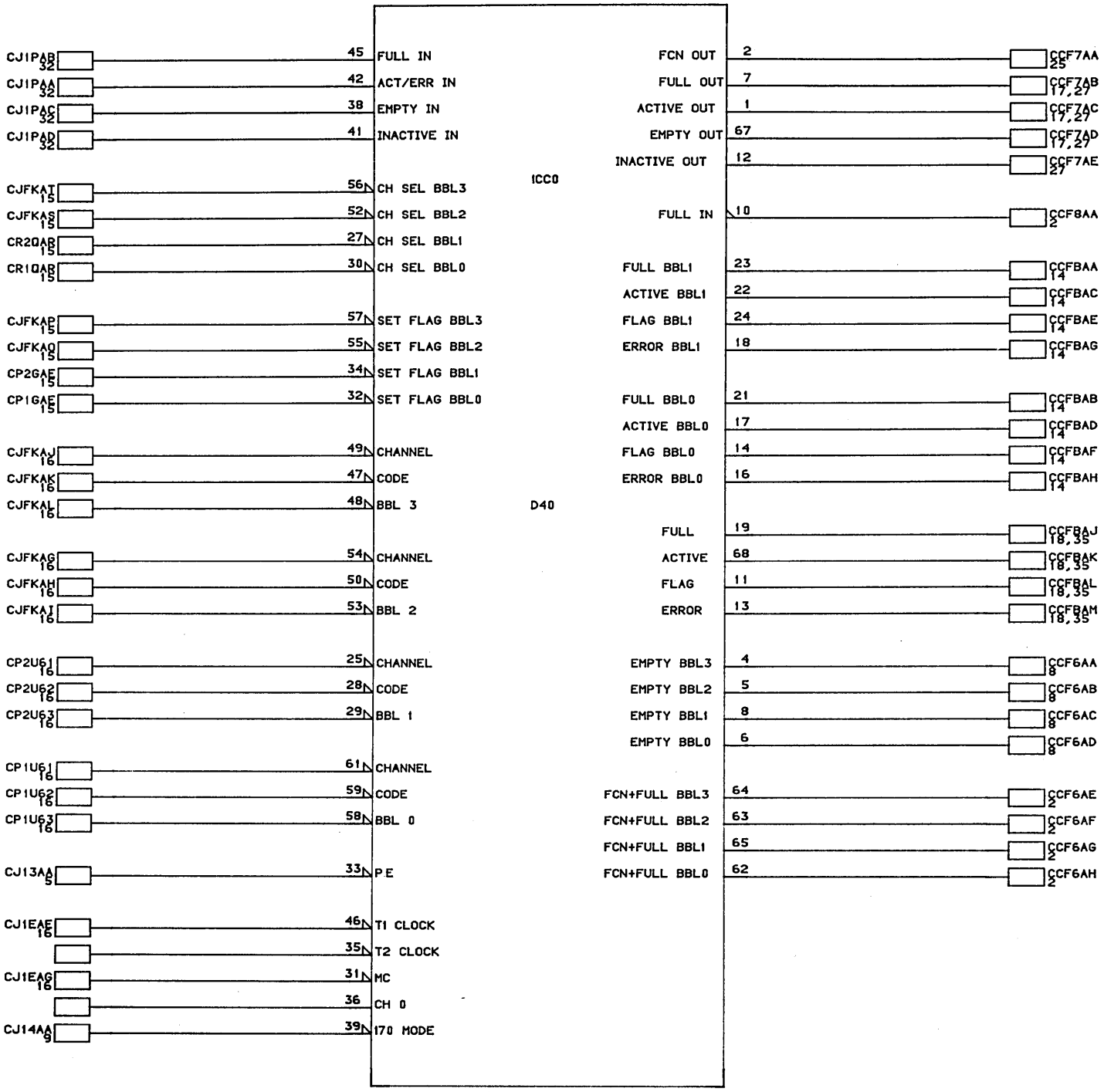

CONTROL DATA CANADA LTD	CHANNEL 17 CONTROL MACROCELL MODULE ASSY 210 PAK TYPE: 1CJ0		C		
		22-JAN-84	SHEET 20	LOC D08	

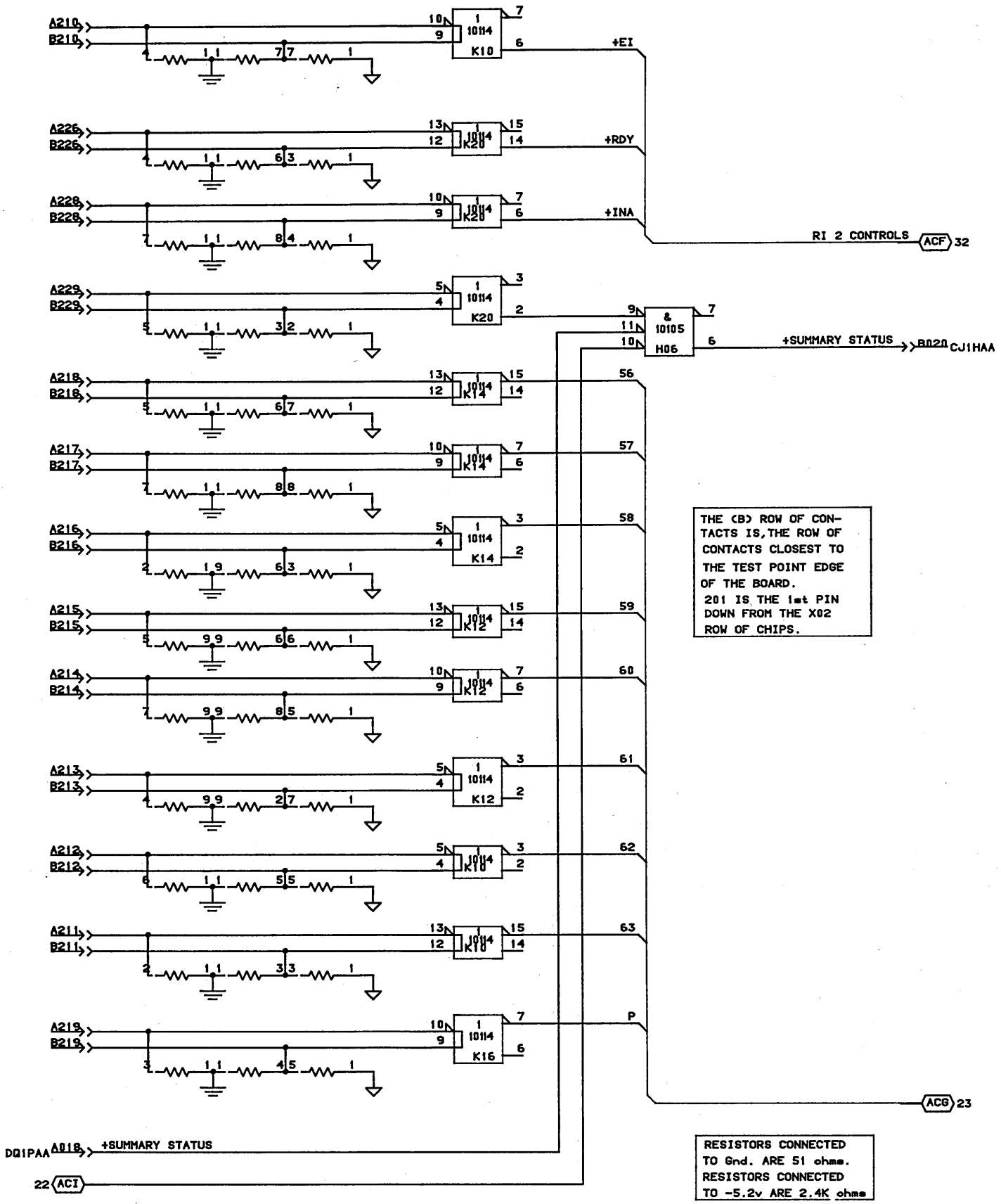

THE (B) ROW OF CONTACTS IS, THE ROW OF CONTACTS CLOSEST TO THE TEST POINT EDGE OF THE BOARD.
201 IS THE 1st PIN DOWN FROM THE X02 ROW OF CHIPS.

RESISTORS CONNECTED TO Gnd. ARE 51 ohms.
RESISTORS CONNECTED TO -5.2v ARE 2.4K ohms

CONTROL DATA CANADA LTD	RADIAL INTERFACE 2 RECIEVERS MODULE ASSY:210 PAK TYPE: 1CJ0	C		A
		22-JAN-84	SHEET 21	loc. d08

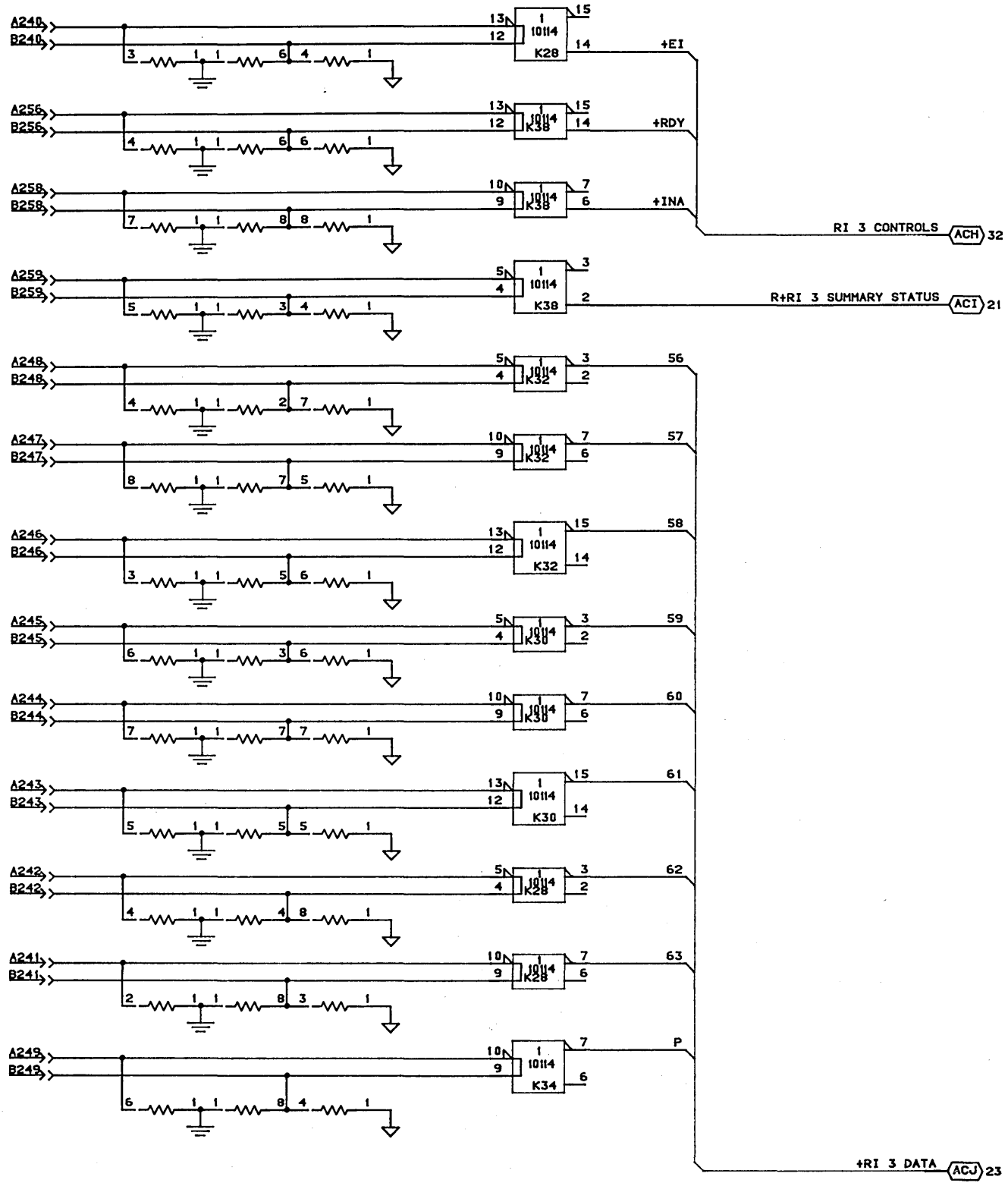

RESISTORS CONNECTED TO GROUND ARE 51ohms.

RESISTORS CONNECTED TO -5.2v ARE 2.4K ohms.

CONTROL DATA CANADA LTD	RADIAL INTERFACE 3 RECIEVERS MODULE ASSY:210 PAK TYPE: 1CJ0		C	
		22-JAN-84	SHEET 22	LOC. D08

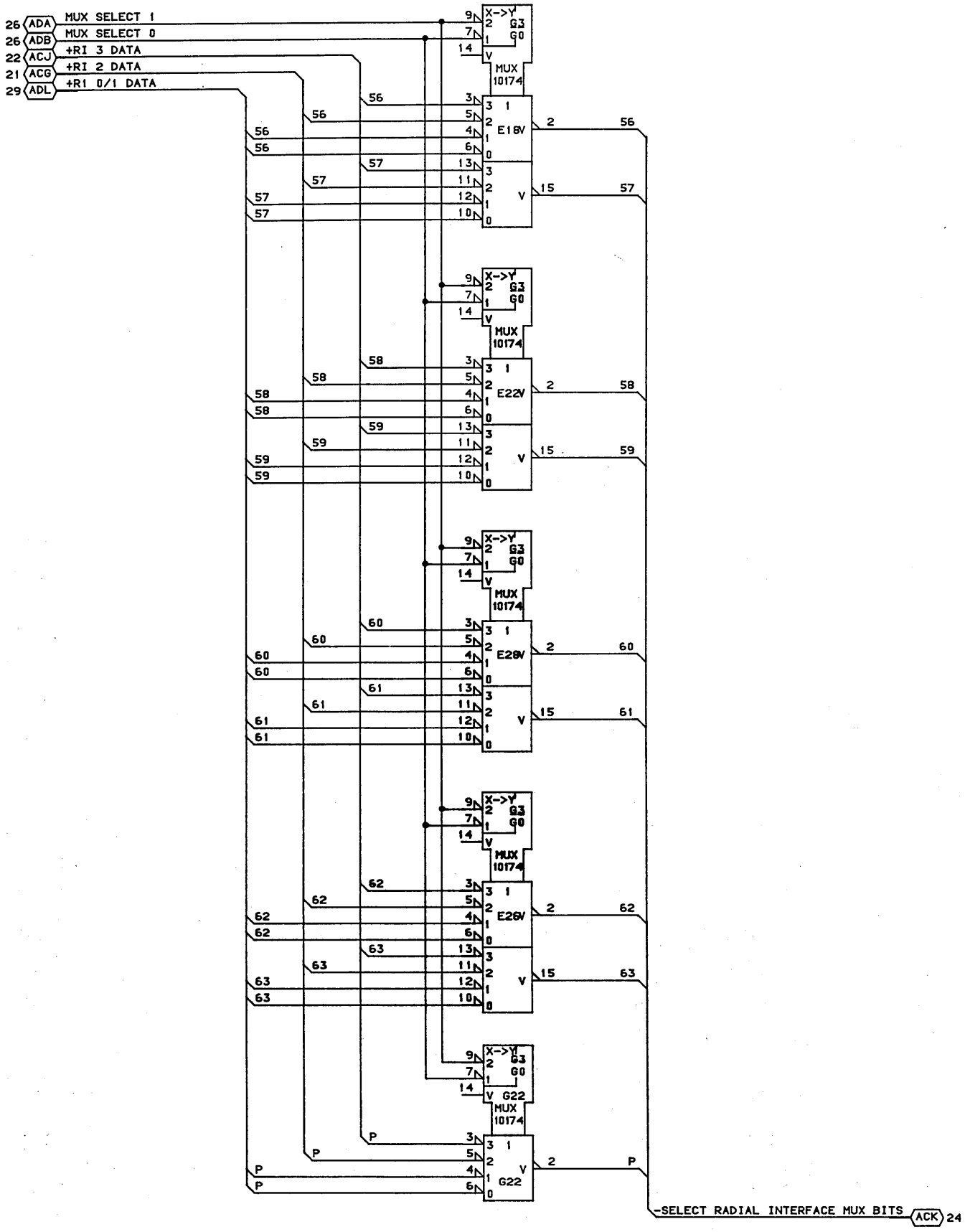

CONTROL DATA CANADA LTD	SELECT RADIAL INTERFACE MUX MODULE ASSY 210 PAK TYPE 1CJ0	C		
		22-JAN-84	SHEET 23	LOC D08

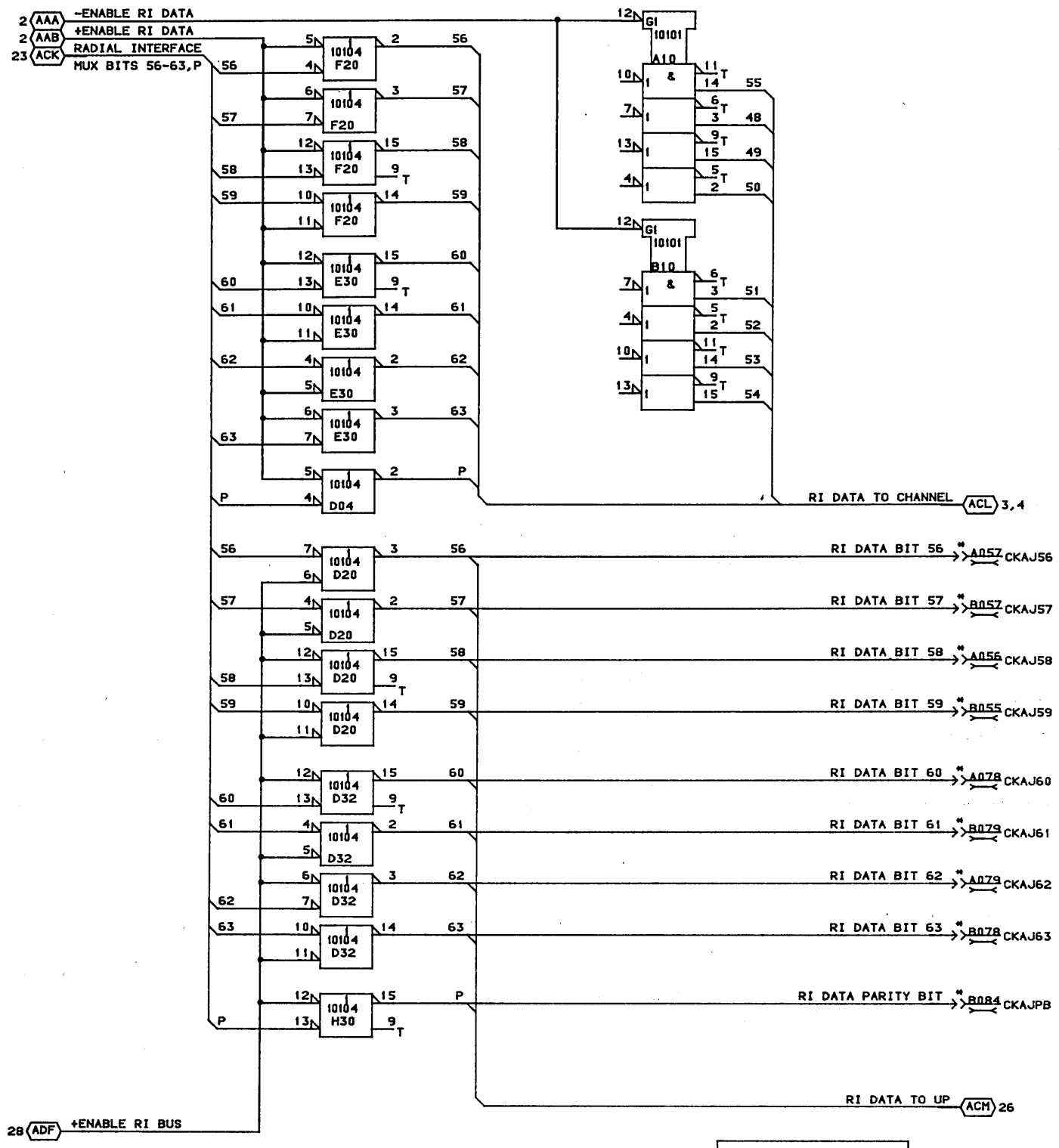

* THESE FOIL ARE AS SHORT AS POSSIBLE AND TERMINATED AT THE END FARTHEST FROM PIN

CONTROL DATA CANADA LTD	RI DATA TO CHANNEL RI DATA TO (up) MODULE ASSY 210 PAK TYPE: 1CJ0		C		
		22-JAN-84	SHEET 24	LOC D08	

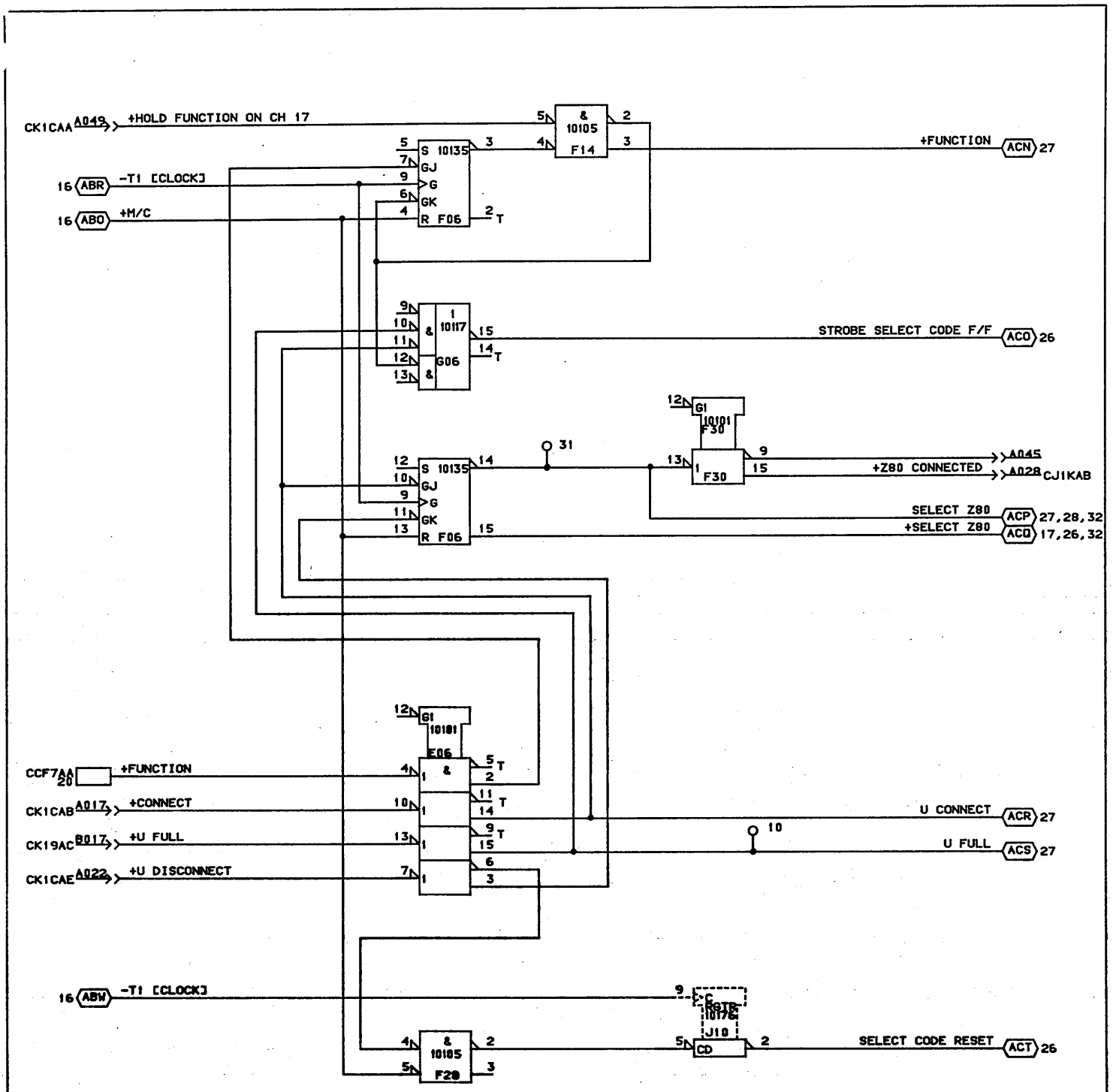

CONTROL DATA CANADA LTD	CONNECT CODE REGISTER MODULE ASSY 210 PAK TYPE 1CJ0		C		
		22-JAN-84	SHEET 25	LOC	D08

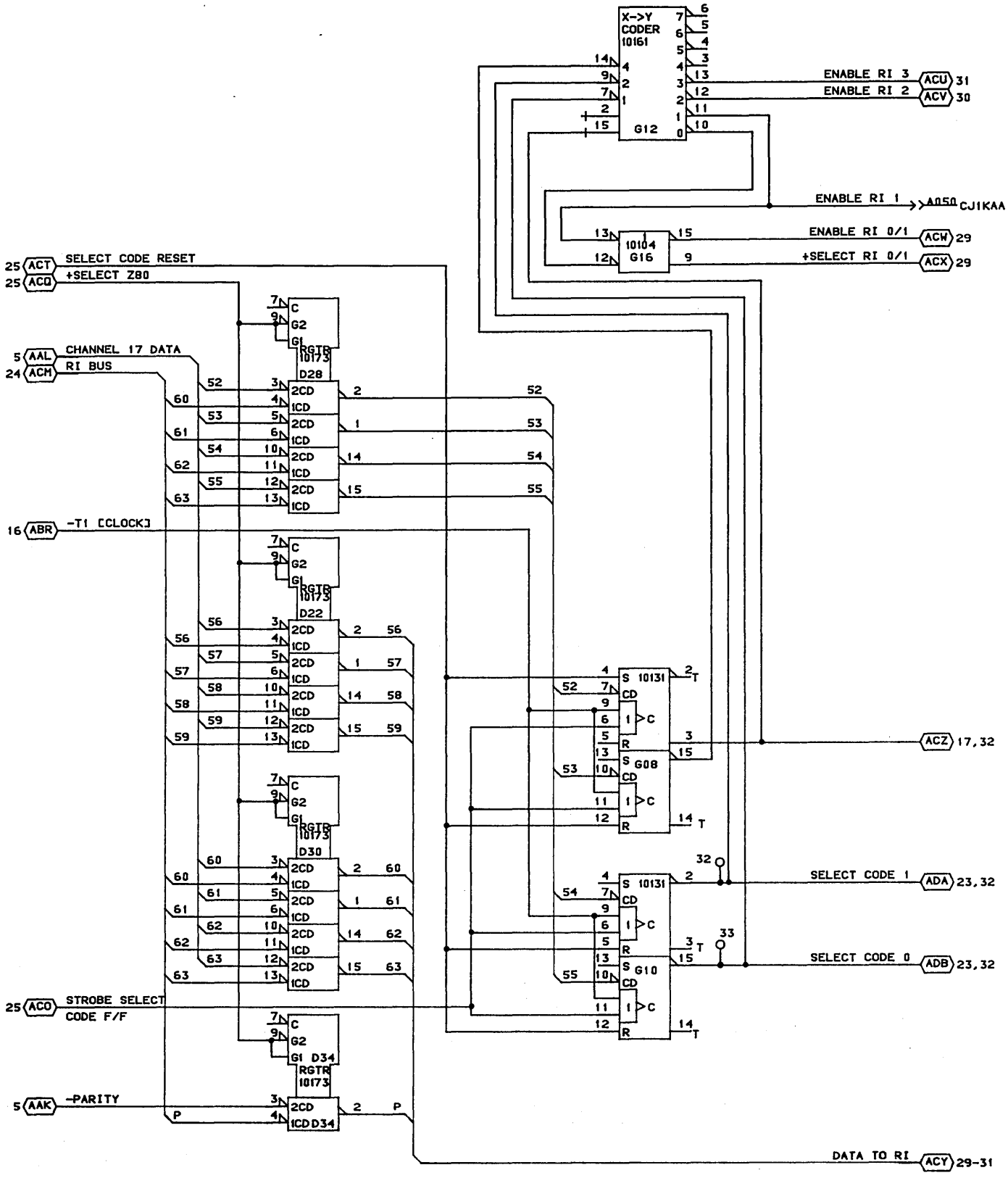

CONTROL DATA CANADA LTD	RI DATA MUX MODULE ASSY 210 PAK TYPE 1CJ0	C		
		22-JAN-84	SHEET 26	LOC D08

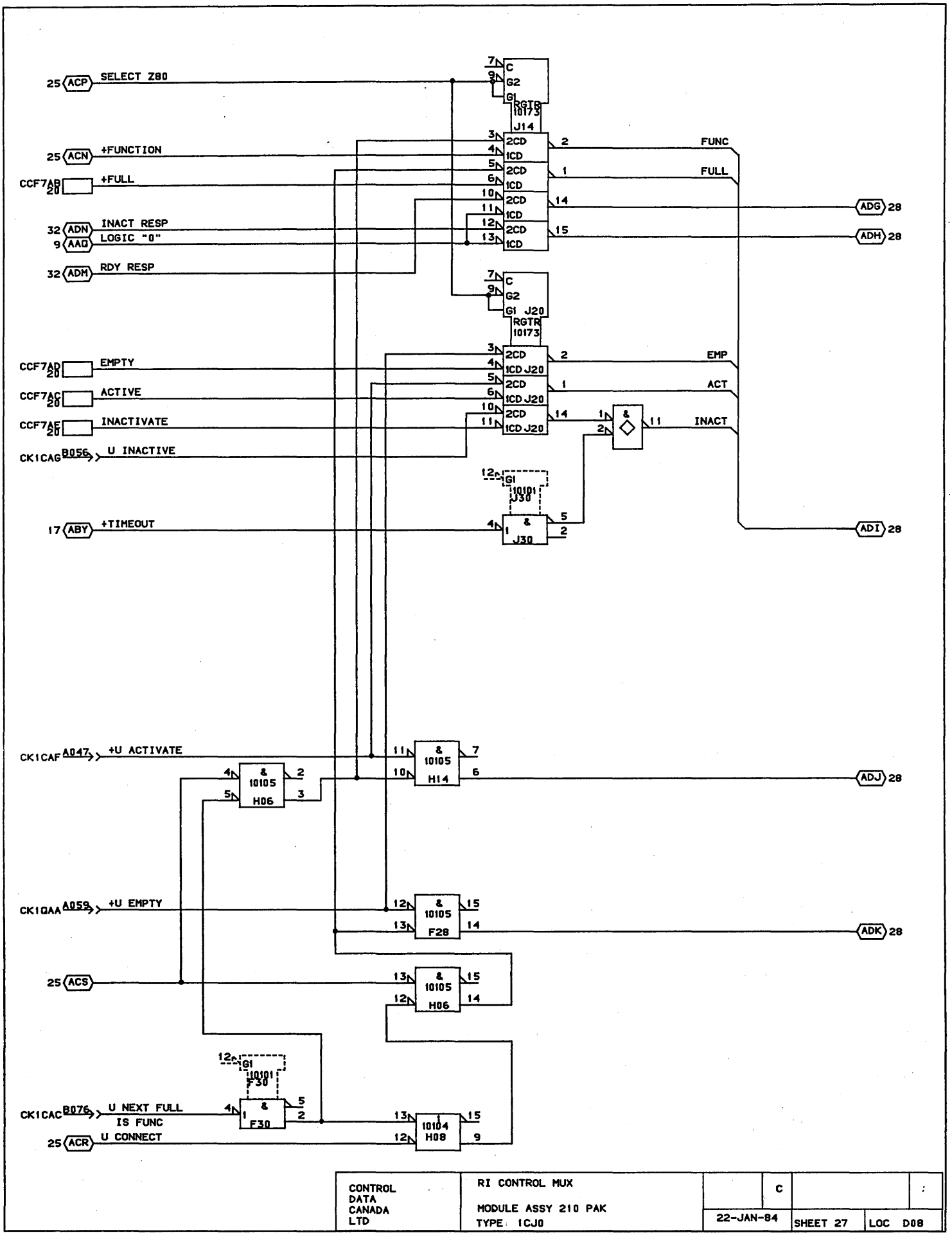
25 ACP SELECT Z80
25 ACN +FUNCTION
CCF7AB 20 +FULL
32 ADN INACT RESP
9 AAQ LOGIC "0"
32 ADM RDY RESP
CCF7AD 20 EMPTY
CCF7AC 20 ACTIVE
CCF7AE 20 INACTIVATE
CK1CAG B056 U INACTIVE
17 ABY +TIMEOUT
CK1CAF A047 +U ACTIVATE
CK1QAA A059 +U EMPTY
25 ACS
CK1CAC B076 U NEXT FULL
IS FUNC
25 ACR U CONNECT
C
G2
G1
RGTR 10173
J14
2CD
1CD
FUNC
FULL
ADG 28
ADH 28
J20
EMP
ACT
INACT
G1 10101 J30
&
J30
ADI 28
10105 H14
ADJ 28
10105 H06
10105 F28
ADK 28
10105 H06
G1 10101 F30
F30
10104 H08
CONTROL DATA CANADA LTD
RI CONTROL MUX
MODULE ASSY 210 PAK
TYPE 1CJ0
C
22-JAN-84
SHEET 27
LOC D08

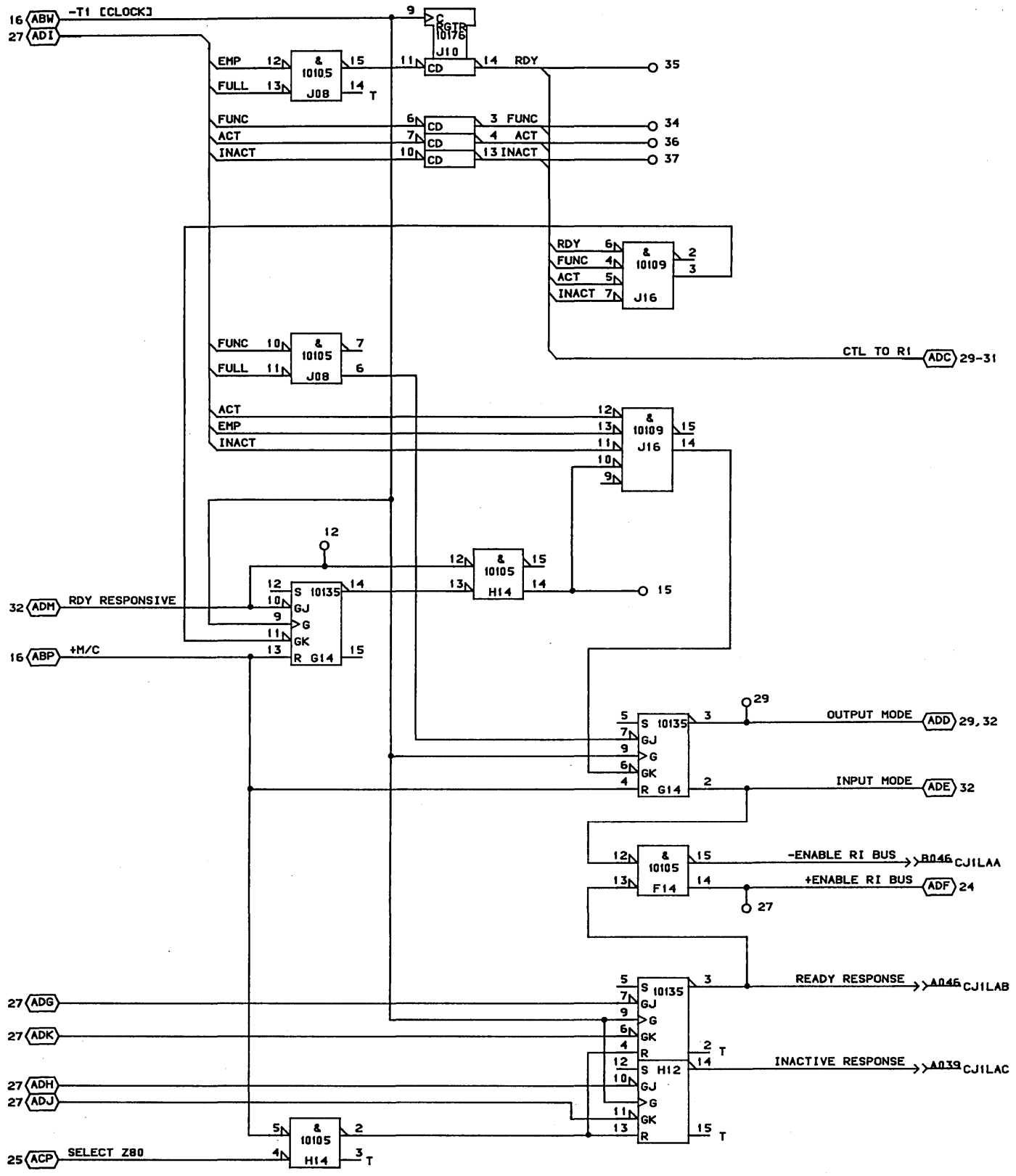

CONTROL DATA CANADA LTD	Z80 RESPONSE FLOPS MODULE ASSY 210 PAK TYPE 1CJ0	C		A
		22-JAN-84	SHEET 28	LOC D08

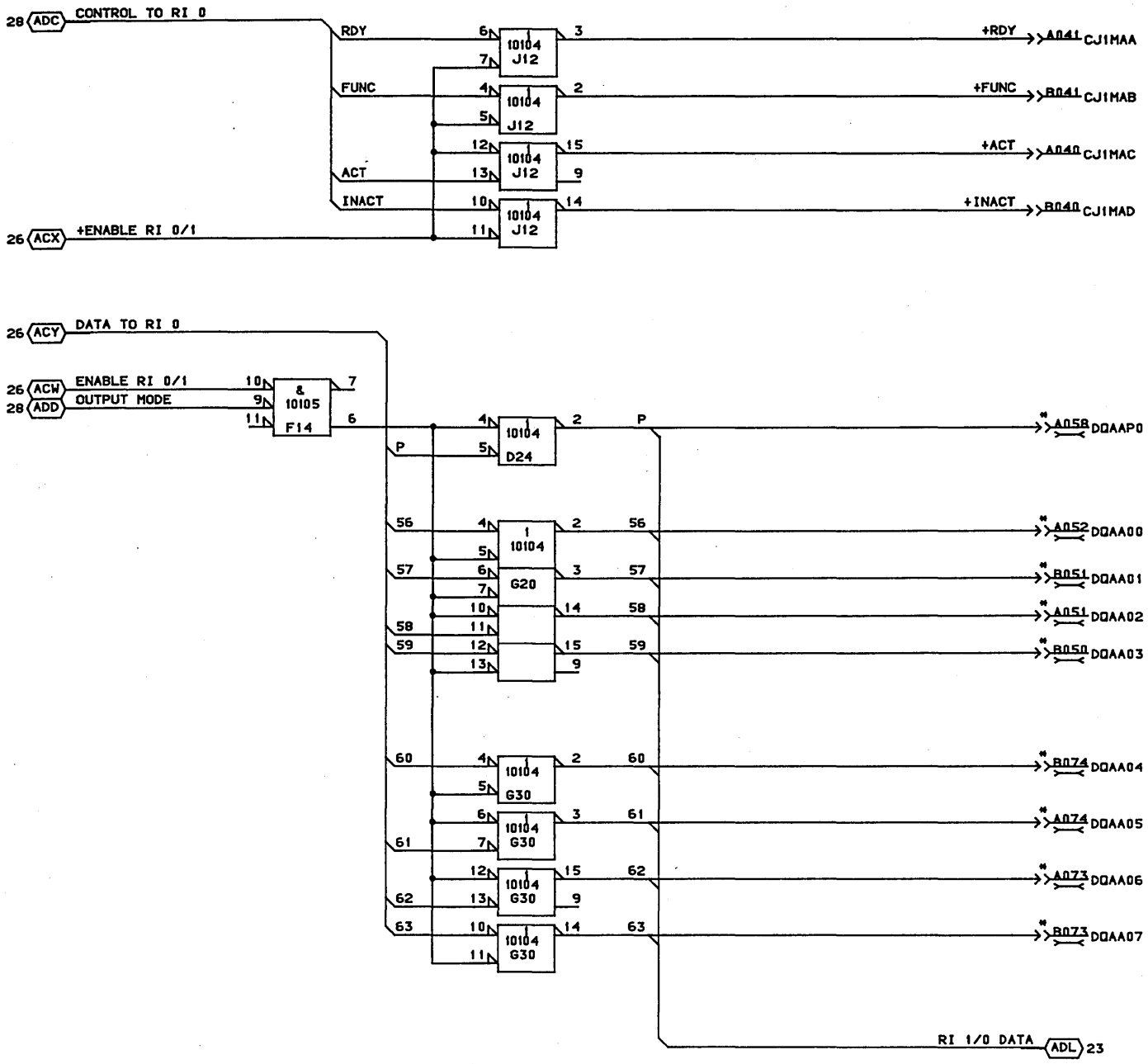

* THESE FOILS MUST BE EXTRA SHORT AND TERMINATE AT THE END FARTHEST FROM THE PIN.

CONTROL DATA CANADA LTD	MAC BUS DRIVERS MODULE ASSY 210 PAK TYPE 1CJ0		C		
		22-JAN-84	SHEET 29	LOC	D08

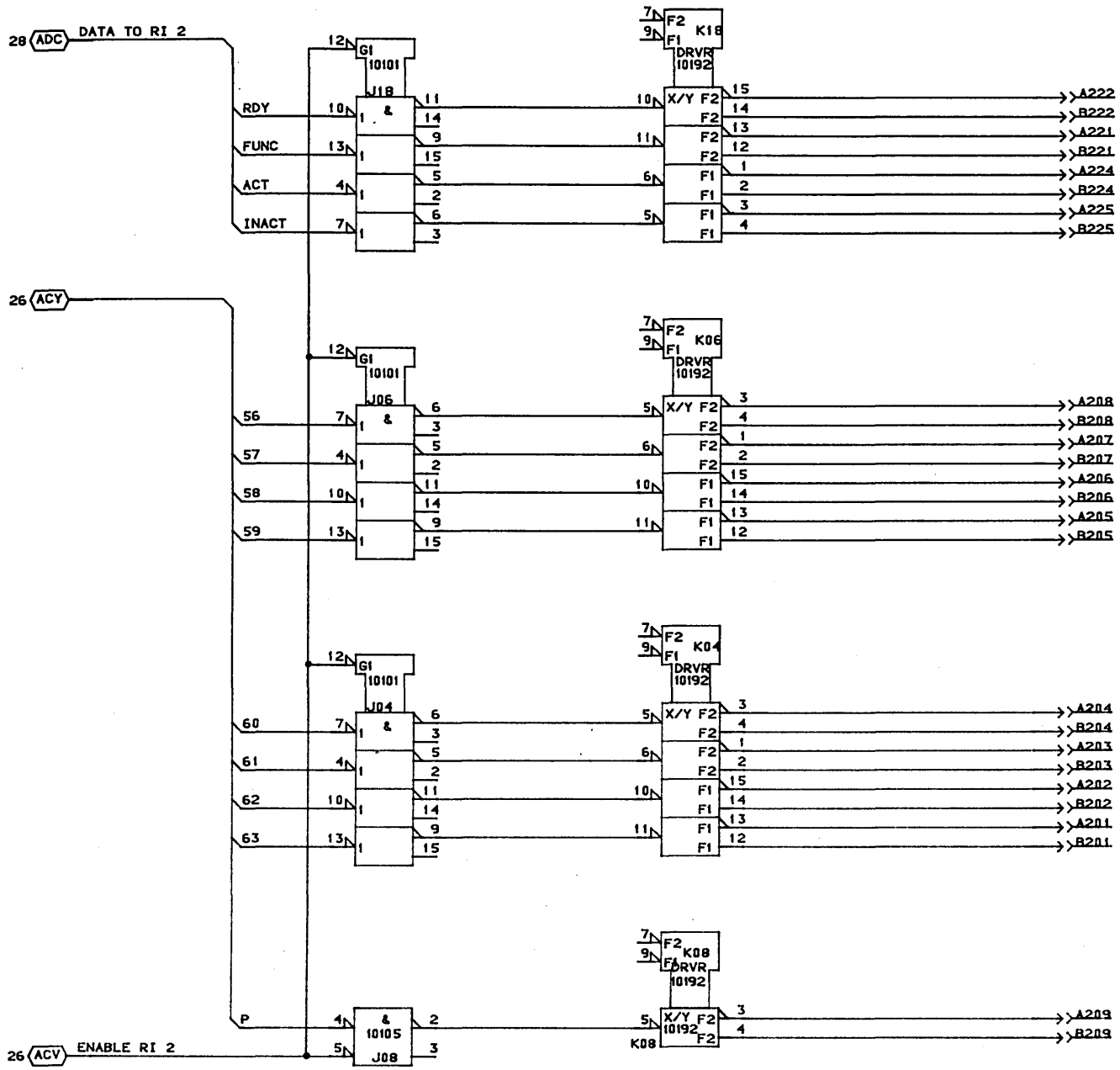

CONTROL DATA CANADA LTD	RADIAL INTERFACE 2 DRIVERS MODULE ASSY 210 PAK TYPE 1CJ0		C		
		22-JAN-84	SHEET 30	LOC D08	

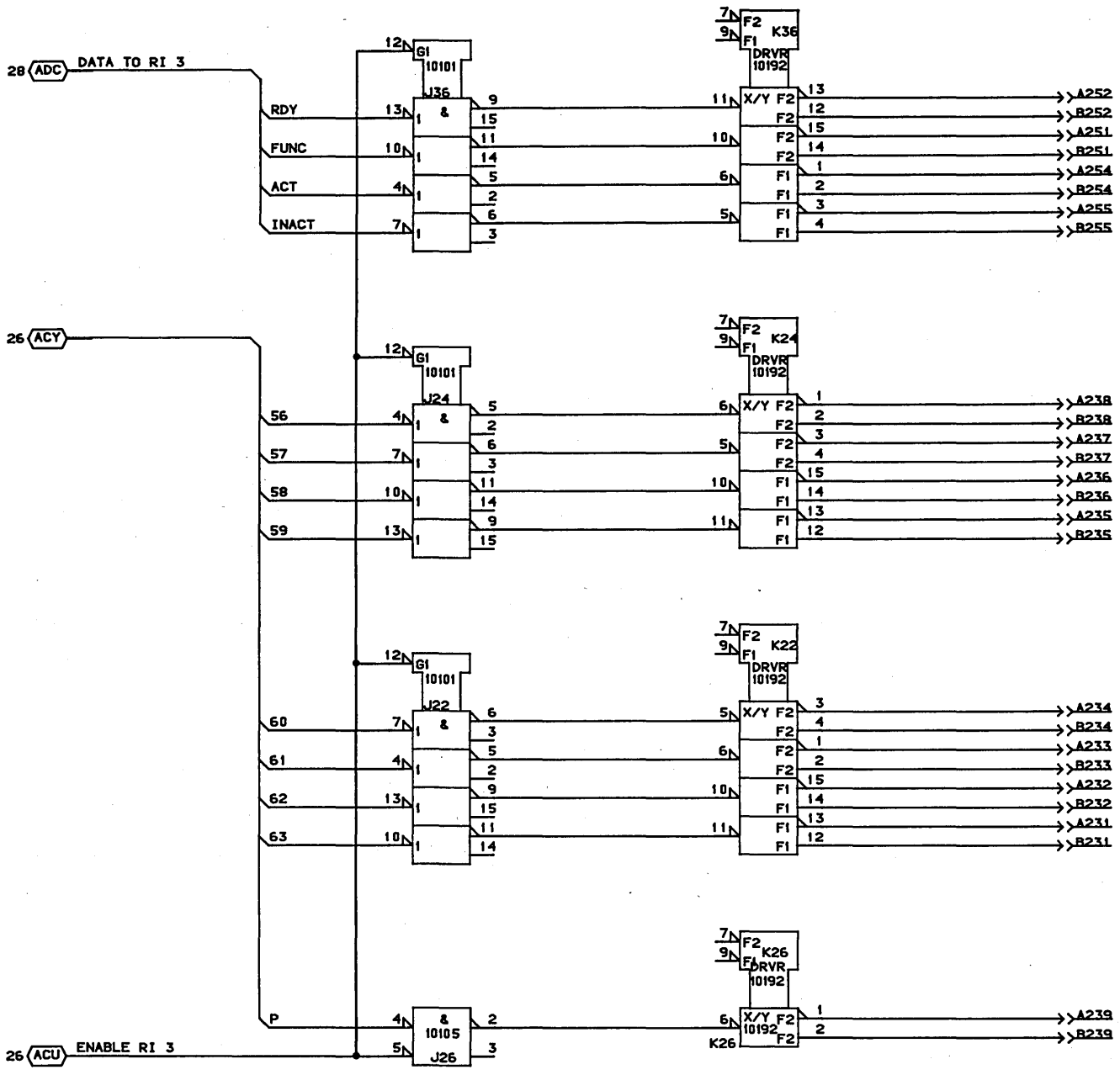

CONTROL DATA CANADA LTD	RADIAL INTERFACE 3 DRIVERS MODULE ASSY 210 PAK TYPE 1CJ0		C		
		22-JAN-84	SHEET 31	LOC D08	

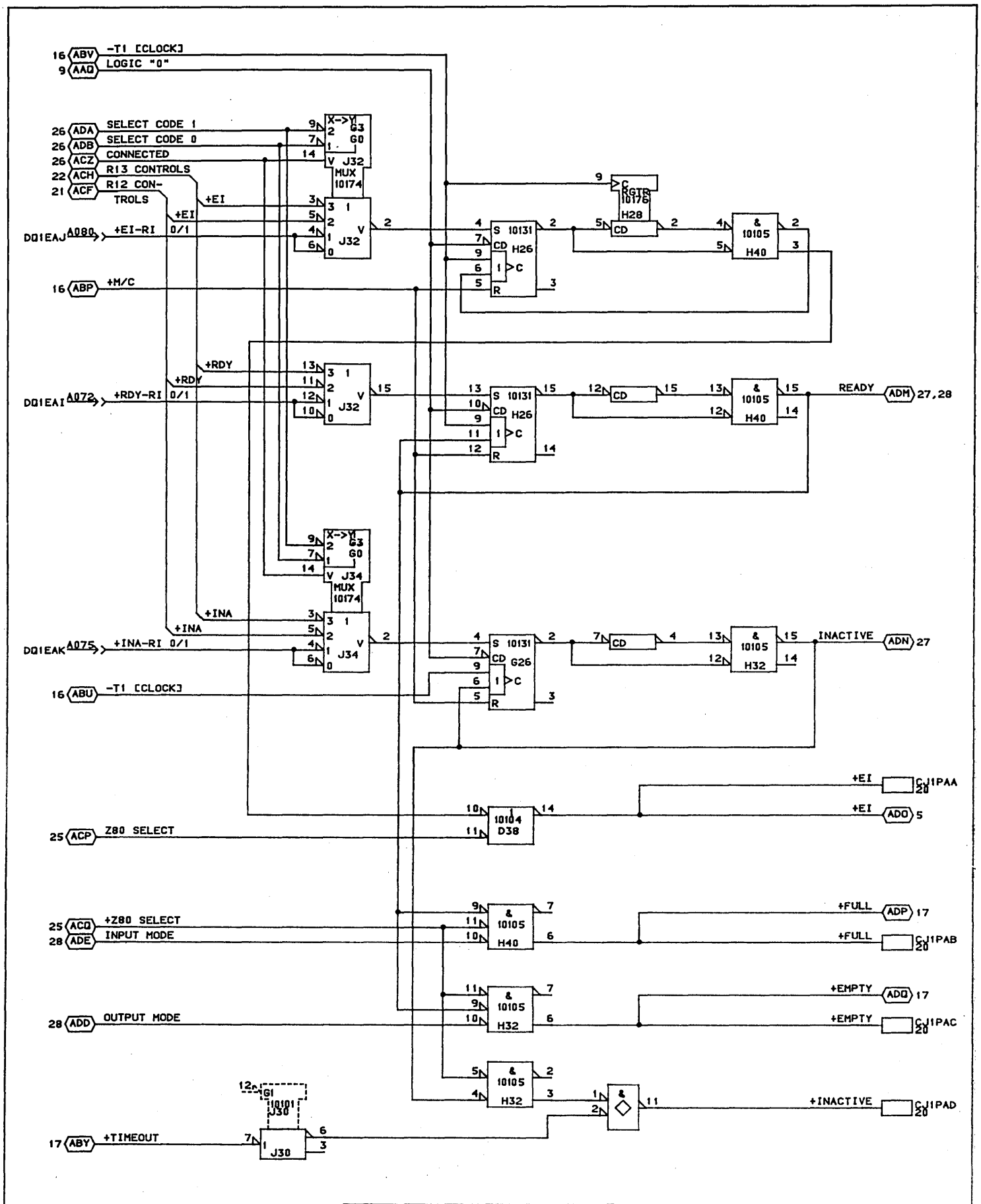

CONTROL DATA CANADA LTD	RI CONTROL RESYNCH AND MUX MODULE ASSY 210 PAK TYPE: 1CJ0		C		
		22-JAN-84	SHEET 32	LOC D08	

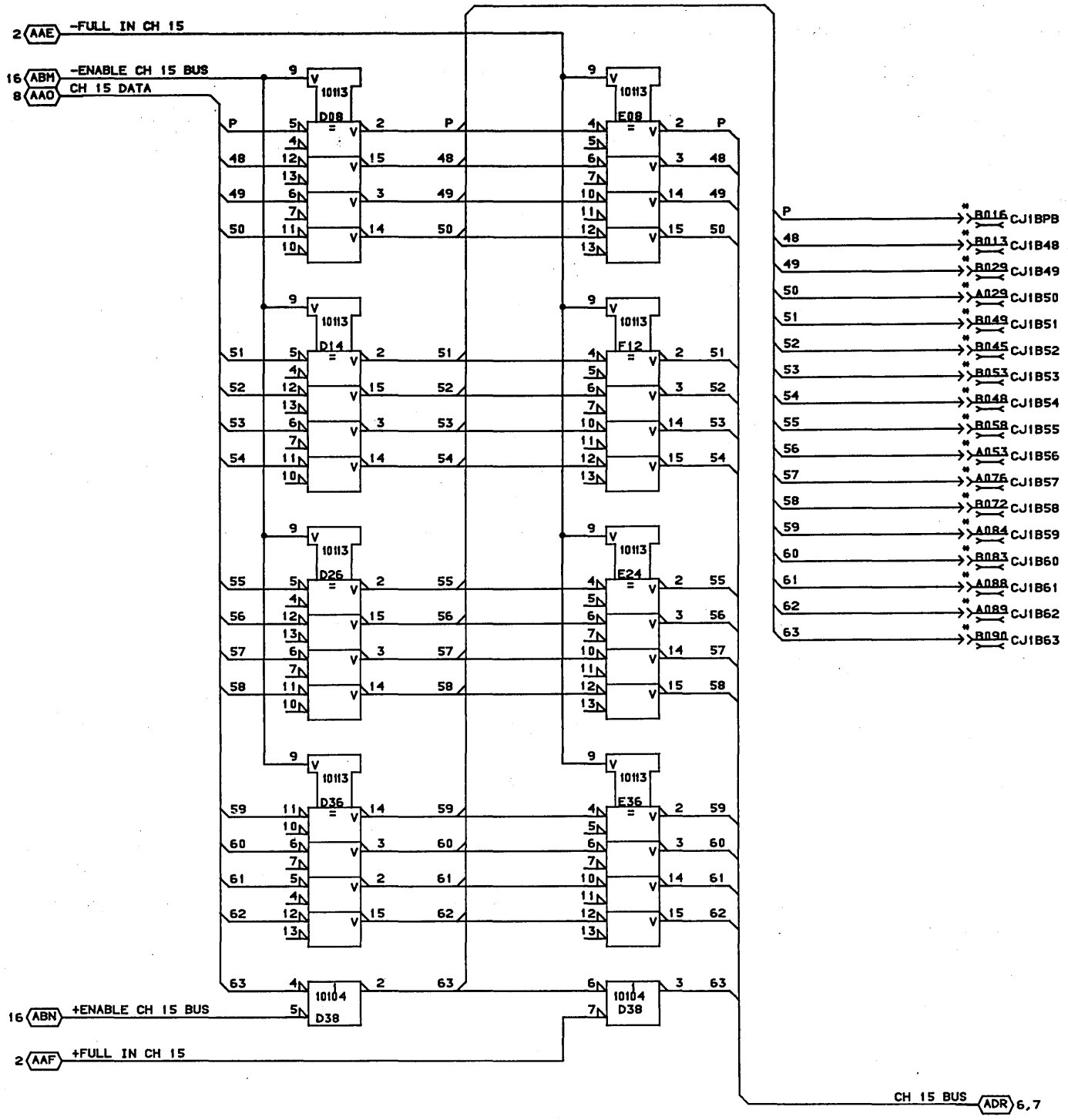

* THESE FOILS ARE AS SHORT AS POSSIBLE AND TERMINATED AT THE END FARTHEST FROM THE PIN

CONTROL DATA CANADA LTD	CHANNEL 15 BUS DRIVERS MODULE ASSY 210 PAK TYPE 1CJ0		C		1
		22-JAN-84	SHEET 33	LOC D08	

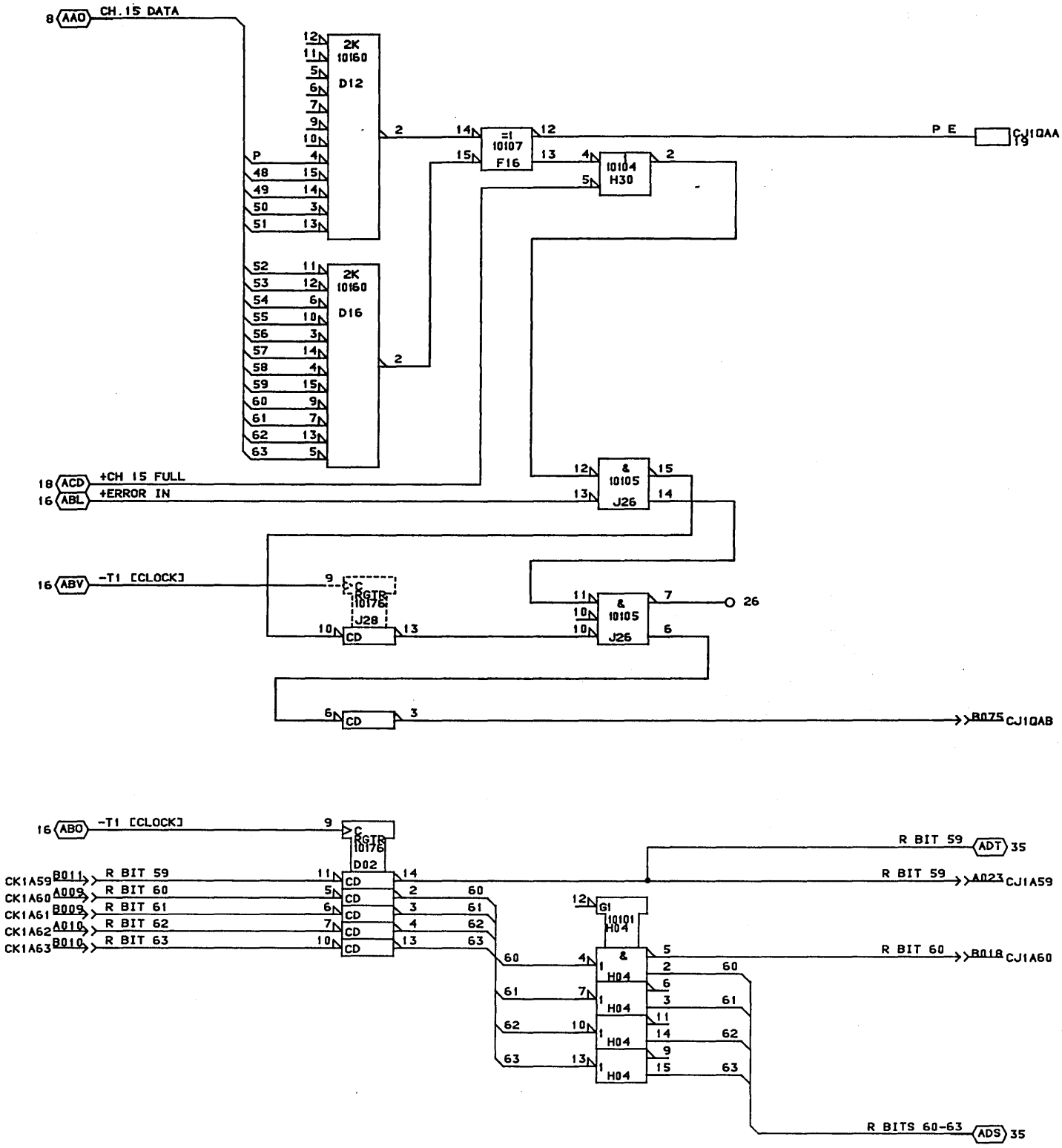

CONTROL DATA CANADA LTD	CH 15 PARITY CHECKER R BITS 59 TO 63 MODULE ASSY 210 PAK TYPE 1CJ0	C		
		22-JAN-84	SHEET 34	LOC D08

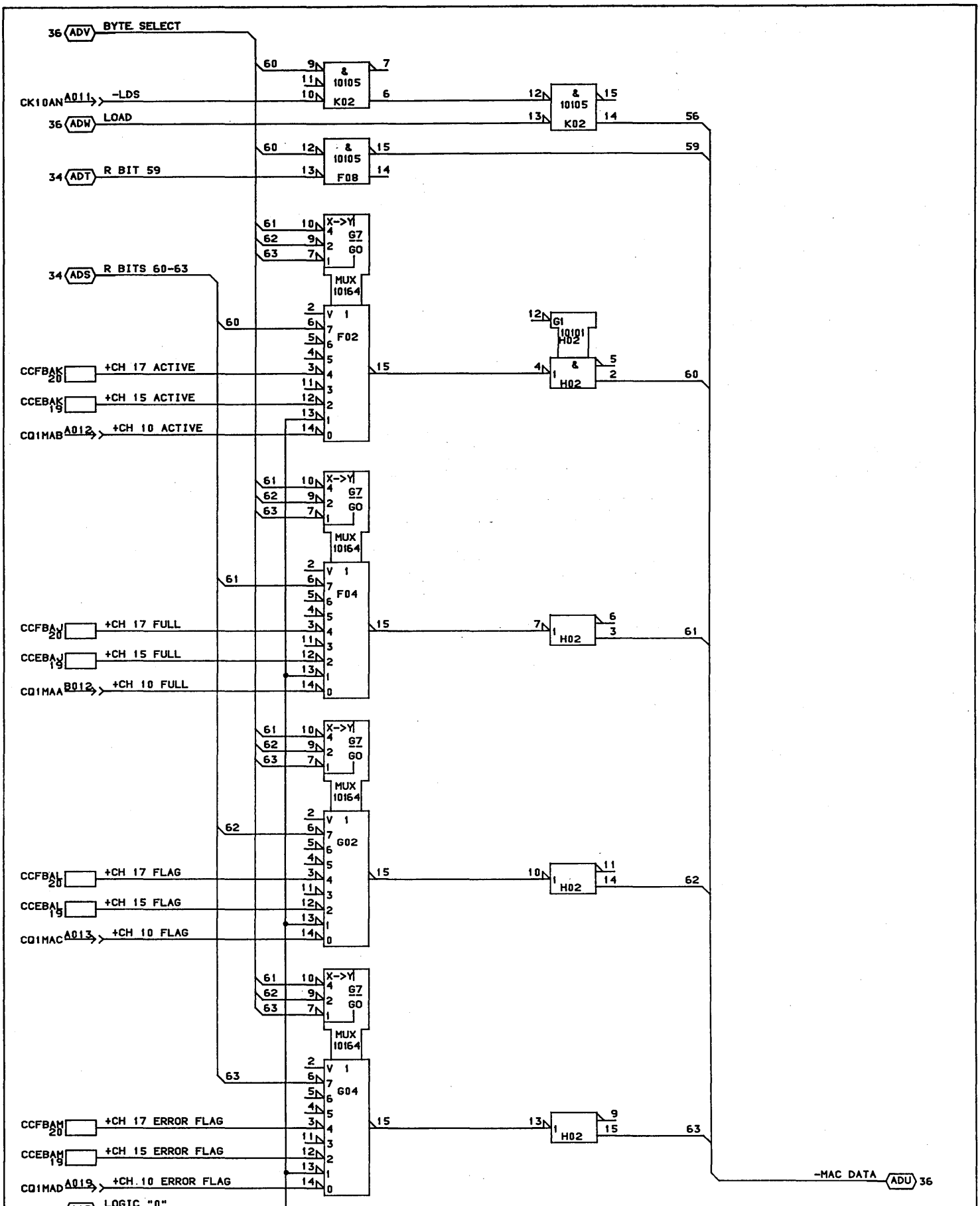
36 ADV BYTE SELECT
CK10AN A011 -LDS
36 ADW LOAD
34 ADT R BIT 59
34 ADS R BITS 60-63
CCFBAK 20 +CH 17 ACTIVE
CCEBAK 19 +CH 15 ACTIVE
CQ1MAB A012 +CH 10 ACTIVE
CCFBAJ 20 +CH 17 FULL
CCEBAJ 19 +CH 15 FULL
CQ1MAA B012 +CH 10 FULL
CCFBAL 20 +CH 17 FLAG
CCEBAL 19 +CH 15 FLAG
CQ1MAC A013 +CH 10 FLAG
CCFBAM 20 +CH 17 ERROR FLAG
CCEBAM 19 +CH 15 ERROR FLAG
CQ1MAD A019 +CH 10 ERROR FLAG
9 AAQ LOGIC "0"
& 10105 K02
& 10105 K02
& 10105 F08
X->Y G7 GO
MUX 10164
V 1 F02
G1 10101 H02
& H02
X->Y G7 GO
MUX 10164
V 1 F04
H02
X->Y G7 GO
MUX 10164
V 1 G02
H02
X->Y G7 GO
MUX 10164
V 1 G04
H02
-MAC DATA ADU 36
CONTROL DATA CANADA LTD
MAC MUX
MODULE ASSY 210 PAK
TYPE 1CJ0
C
22-JAN-84
SHEET 35
LOC D08

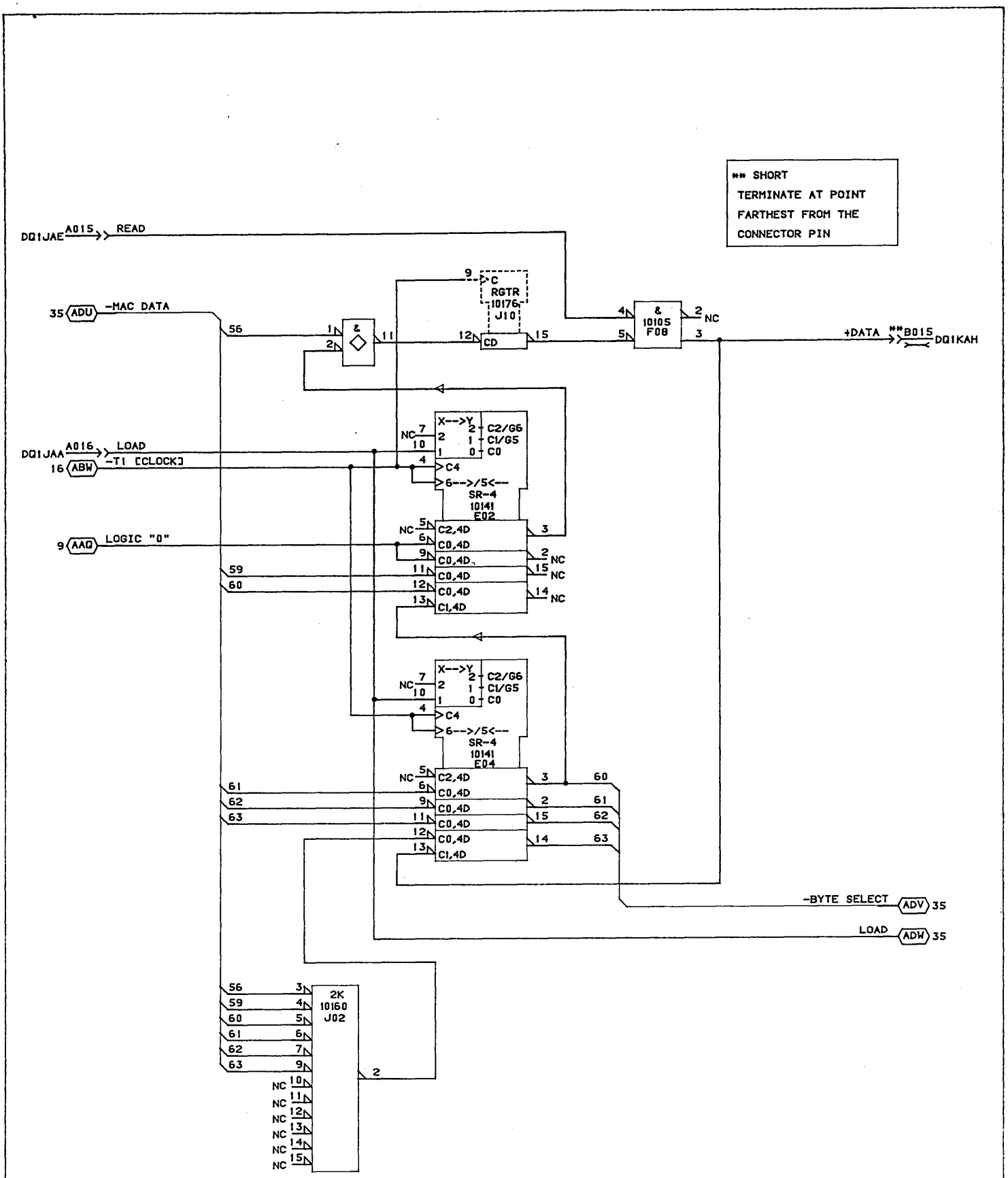

CONTROL DATA CANADA LTD	MAC INTERFACE MODULE ASSY:210 PAK TYPE: 1CJ0	C		E
		04-MAR-86	SHEET 36	

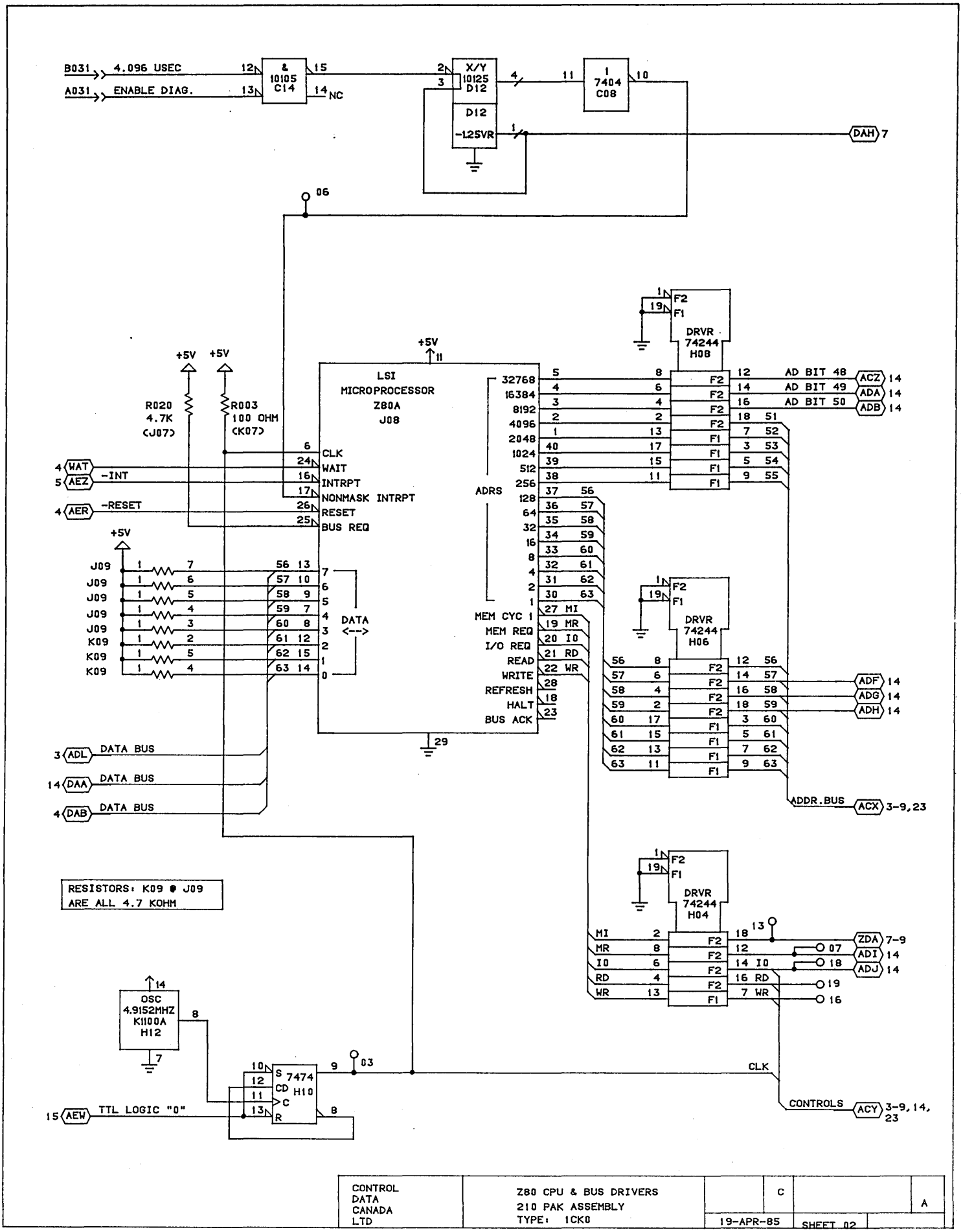

CONTROL DATA CANADA LTD	Z80 CPU & BUS DRIVERS 210 PAK ASSEMBLY TYPE: 1CK0		C	A
		19-APR-85	SHEET 02	

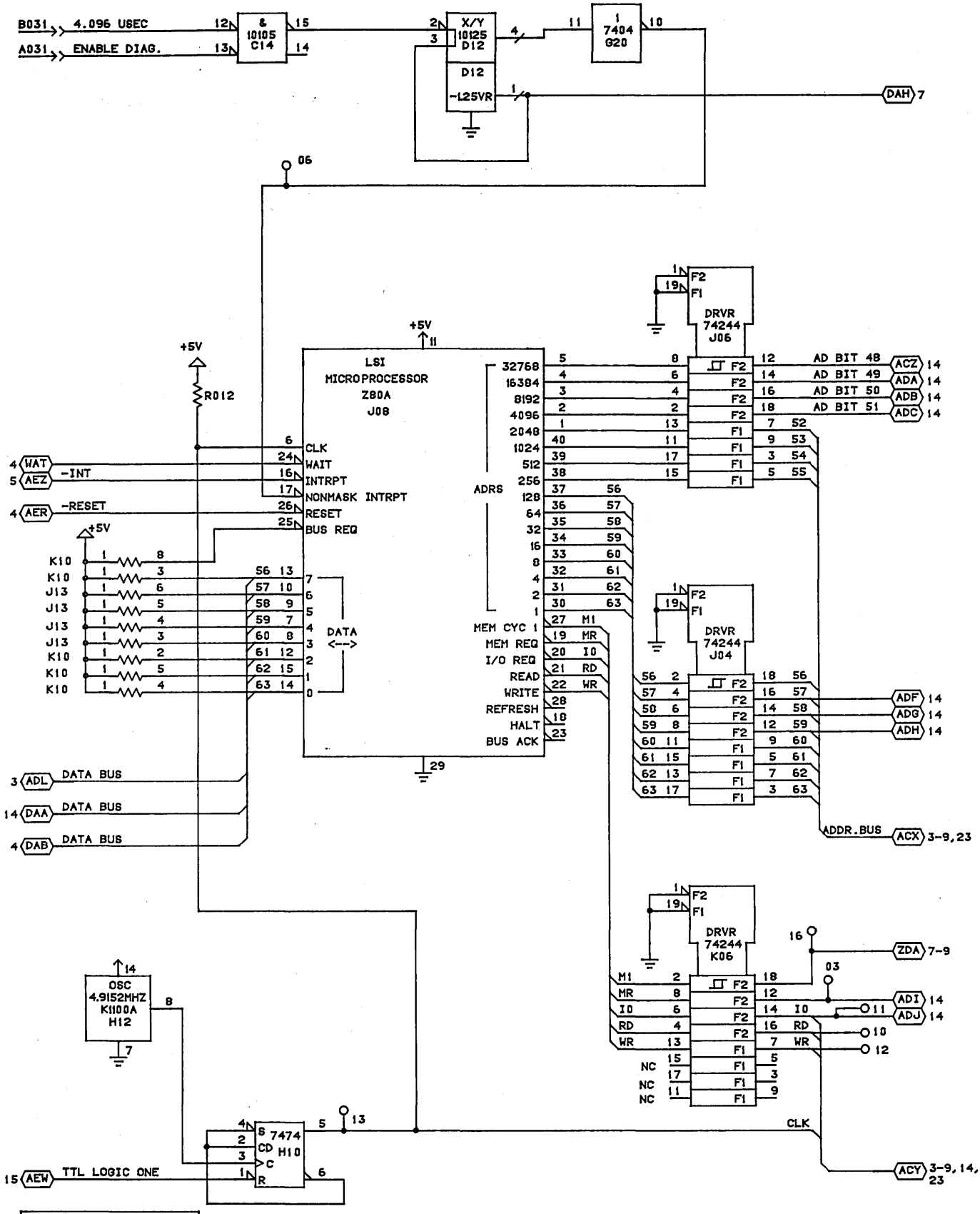

NOTE: THIS DRAWING IS APPLICABLE TO PWB 19268184 ONLY.

CONTROL DATA CANADA LTD	Z80 CPU & BUS DRIVERS 210 PAK ASSEMBLY TYPE: 1CK0	C		A
		19-APR-85	SHEET 02A	

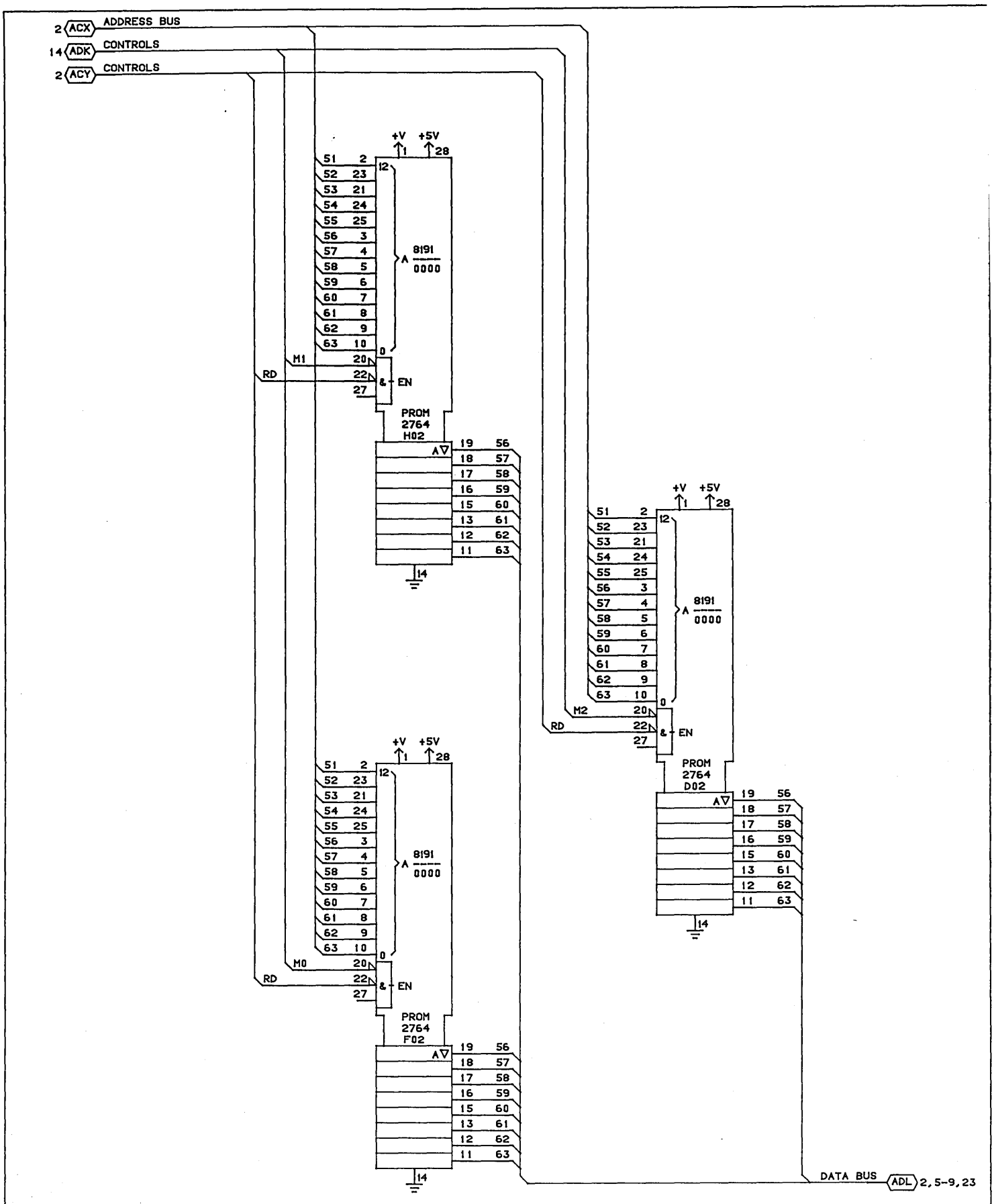

CONTROL DATA CANADA LTD	PROMS 210 PAK ASSEMBLY TYPE: 1CK0	C		A
		19-APR-85	SHEET 03	

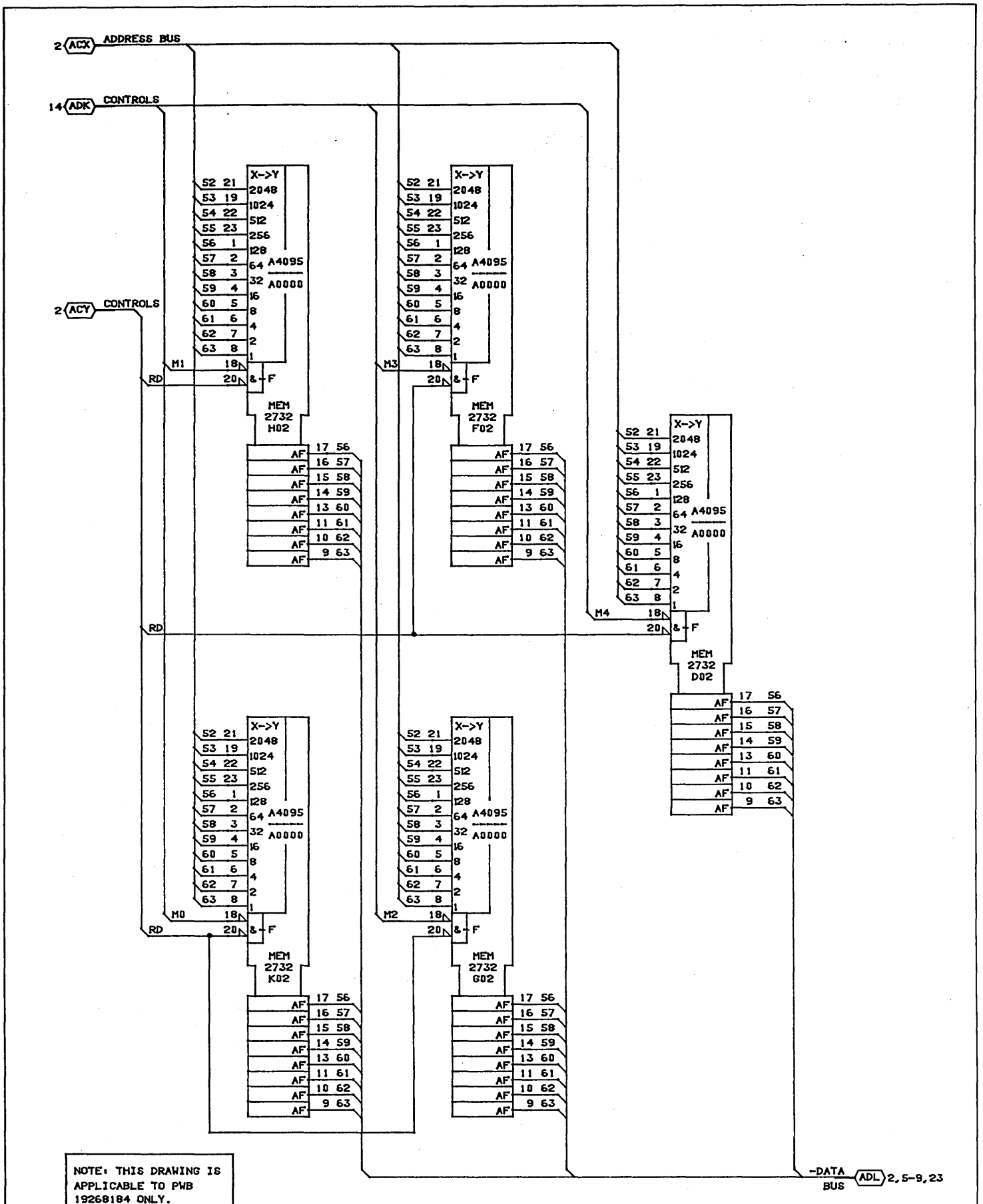

NOTE: THIS DRAWING IS APPLICABLE TO PWB 19268184 ONLY.

CONTROL DATA CANADA LTD	PROMS 210 PAK ASSEMBLY TYPE: 1CK0	C		A
		19-APR-85	SHEET 03A	

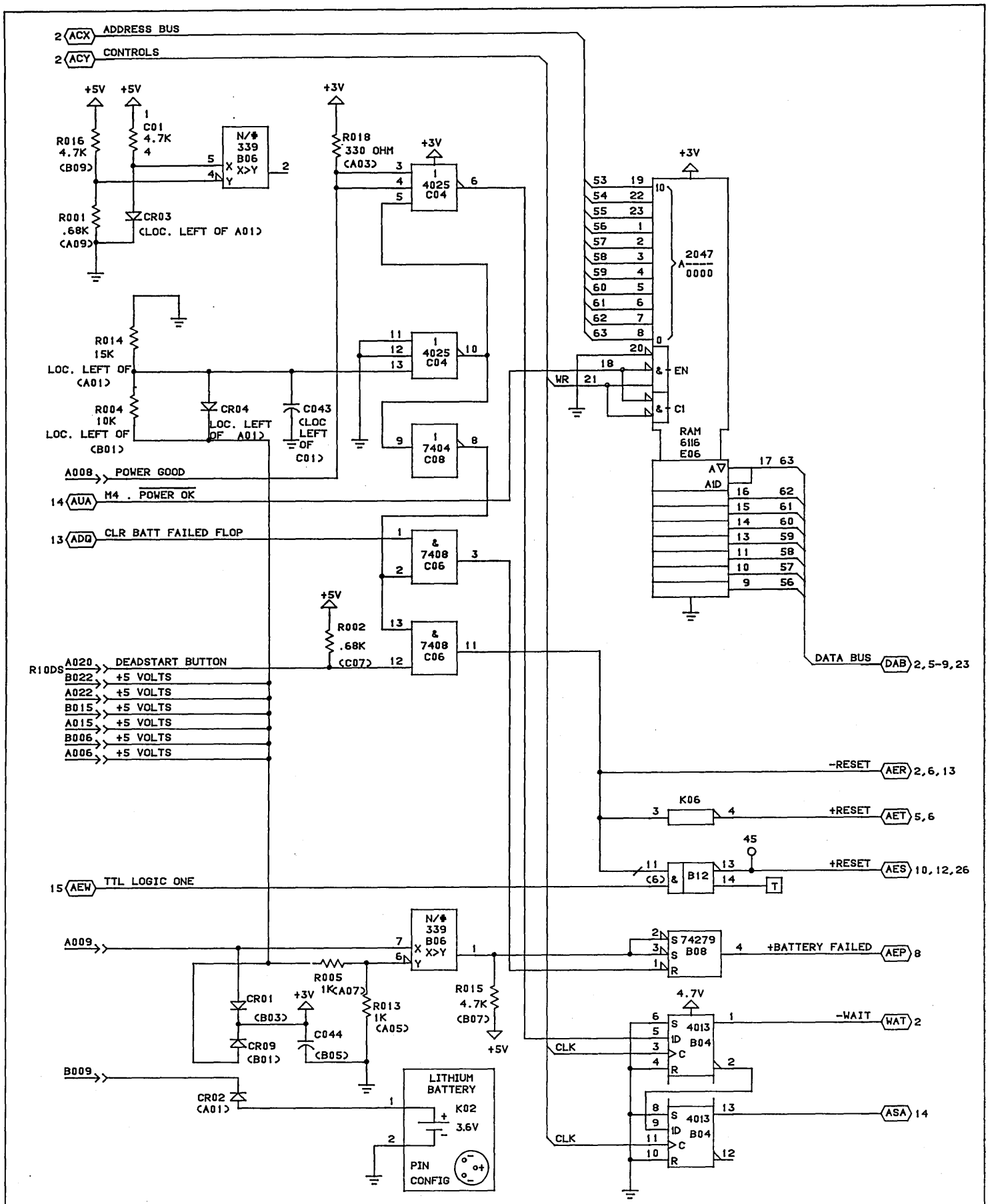

CONTROL DATA CANADA LTD	RAMS & PROM BUS DRIVERS BATTERY CIRCUIT 210 ASSEMBLY PAK TYPE: 1CK0	C		A
		19-APR-85	SHEET 04	

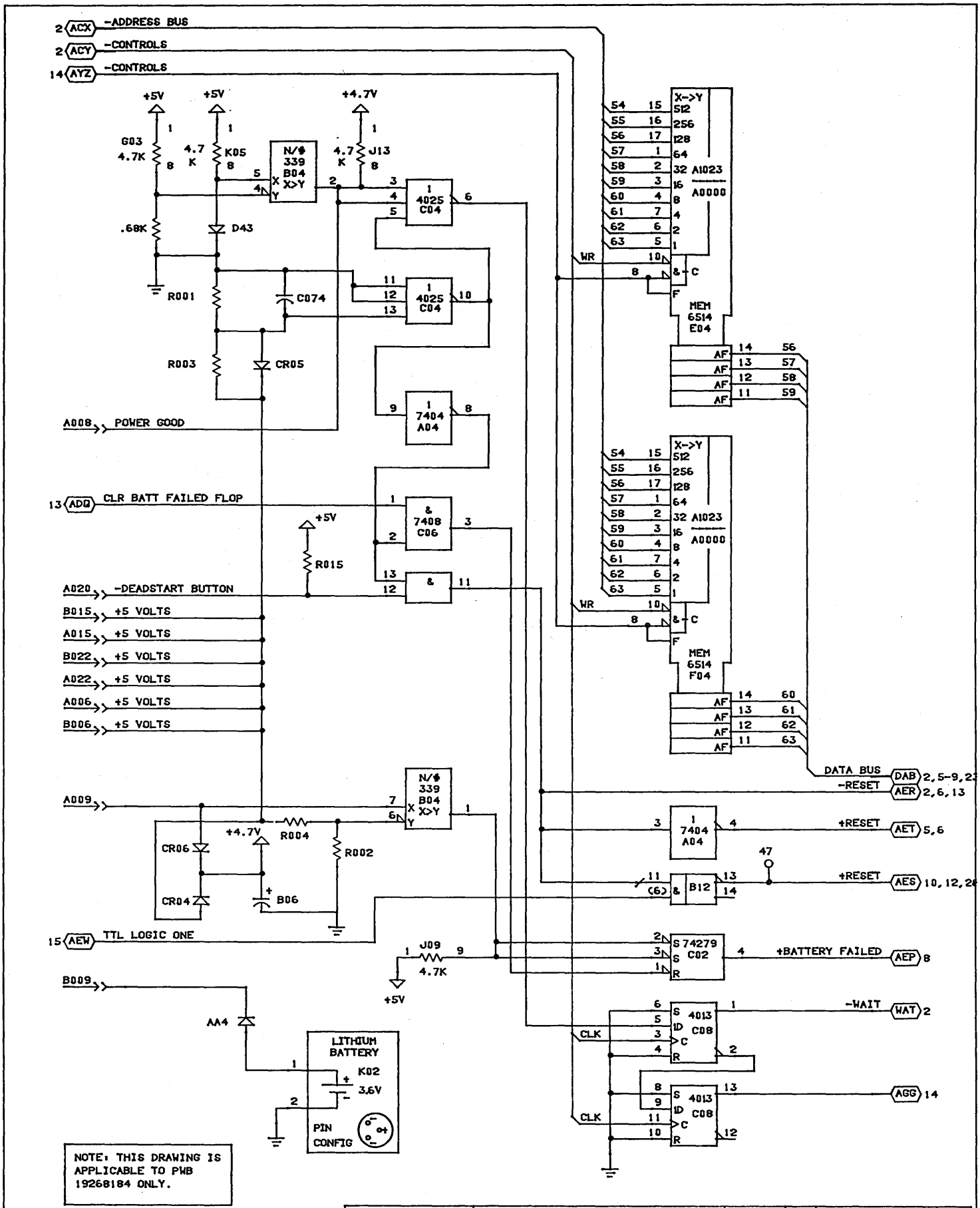
2 ACX -ADDRESS BUS
2 ACY -CONTROLS
14 AYZ -CONTROLS
+5V
+5V
+4.7V
G03 4.7K
4.7 K
K05
N/# 339 B04 X>Y
4.7 K
J13
.68K
D43
R001
C074
R003
CR05
1 4025 C04
1 4025 C04
1 7404 A04
A008 POWER GOOD
13 ADQ CLR BATT FAILED FLOP
& 7408 C06
R015
A020 -DEADSTART BUTTON
B015 +5 VOLTS
A015 +5 VOLTS
B022 +5 VOLTS
A022 +5 VOLTS
A006 +5 VOLTS
B006 +5 VOLTS
A009
N/# 339 B04 X>Y
+4.7V
R004
R002
CR06
CR04
B06
15 AEW TTL LOGIC ONE
J09
4.7K
+5V
B009
AA4
LITHIUM BATTERY
K02
3.6V
PIN CONFIG
NOTE: THIS DRAWING IS APPLICABLE TO PWB 19268184 ONLY.
X->Y 512 256 128 64 32 16 8 4 2 1
A1023 A0000
WR
MEM 6514 E04
MEM 6514 F04
DATA BUS DAB 2,5-9,23
-RESET AER 2,6,13
1 7404 A04
+RESET AET 5,6
47
B12
+RESET AES 10,12,26
S 74279 C02
+BATTERY FAILED AEP 8
4013 C08
-WAIT WAT 2
CLK
AGG 14
CONTROL DATA CANADA LTD
RAMS & PROM BUS DRIVERS
BATTERY CIRCUIT
210 ASSEMBLY PAK
TYPE: 1CK0
C
A
19-APR-85
SHEET 04A

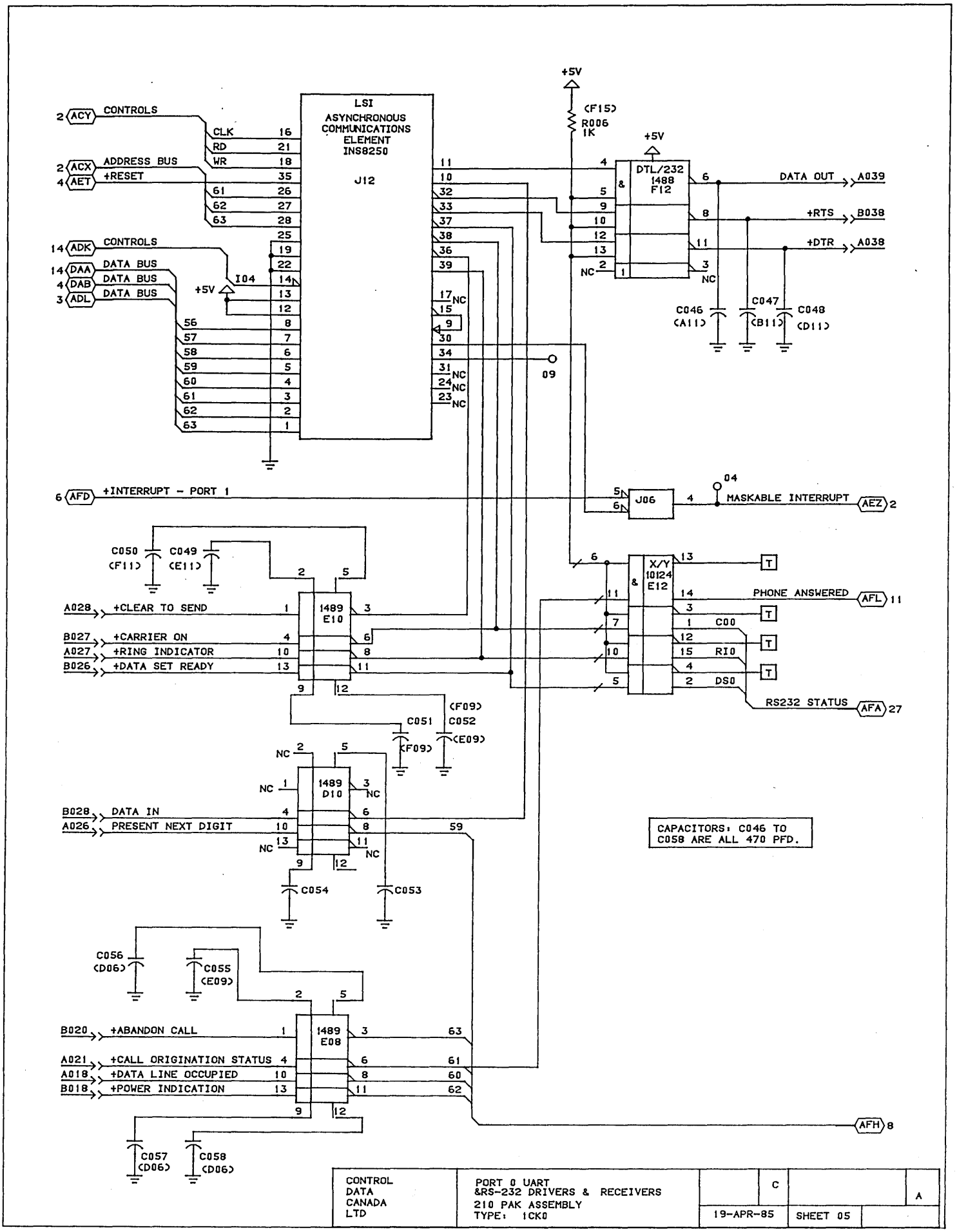

CONTROL DATA CANADA LTD	PORT 0 UART &RS-232 DRIVERS & RECEIVERS 210 PAK ASSEMBLY TYPE: 1CK0		C	A
		19-APR-85	SHEET 05	

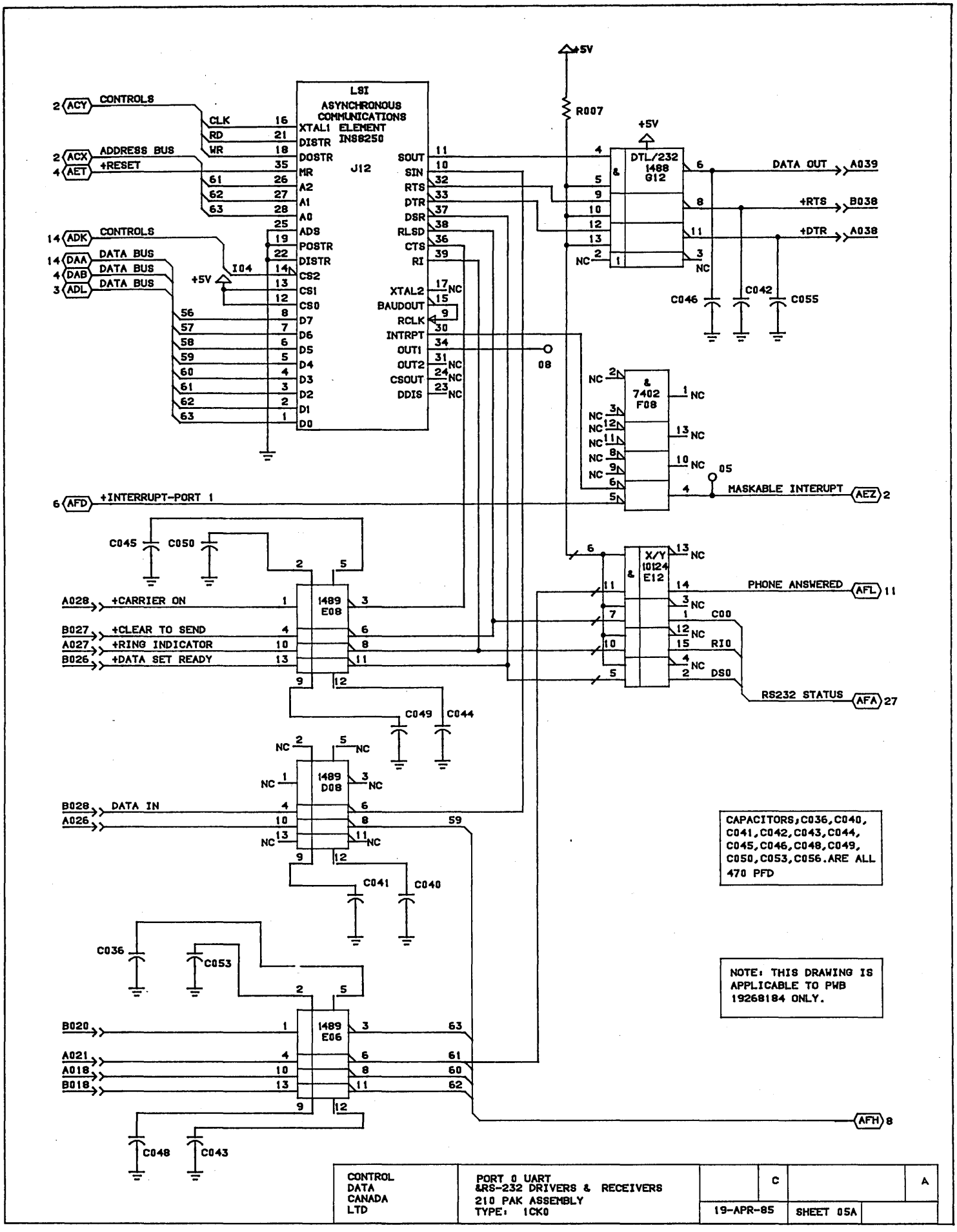
LSI
ASYNCHRONOUS
COMMUNICATIONS
ELEMENT
INS8250
J12
CONTROLS
ADDRESS BUS
+RESET
CONTROLS
DATA BUS
DATA BUS
DATA BUS
+5V
I04
+5V
R007
+5V
DTL/232
1488
G12
DATA OUT
A039
+RTS
B038
+DTR
A038
C046
C042
C055
08
7402
F08
05
MASKABLE INTERUPT
AEZ
+INTERRUPT-PORT 1
AFD
C045
C050
1489
E08
A028
+CARRIER ON
B027
+CLEAR TO SEND
A027
+RING INDICATOR
B026
+DATA SET READY
C049
C044
X/Y
10124
E12
PHONE ANSWERED
AFL
C00
RI0
DS0
RS232 STATUS
AFA
1489
D08
B028
DATA IN
A026
C041
C040
CAPACITORS,C036,C040,
C041,C042,C043,C044,
C045,C046,C048,C049,
C050,C053,C056.ARE ALL
470 PFD
C036
C053
NOTE: THIS DRAWING IS
APPLICABLE TO PWB
19268184 ONLY.
1489
E06
B020
A021
A018
B018
AFH
C048
C043
CONTROL
DATA
CANADA
LTD
PORT 0 UART
&RS-232 DRIVERS & RECEIVERS
210 PAK ASSEMBLY
TYPE: 1CK0
C
A
19-APR-85
SHEET 05A

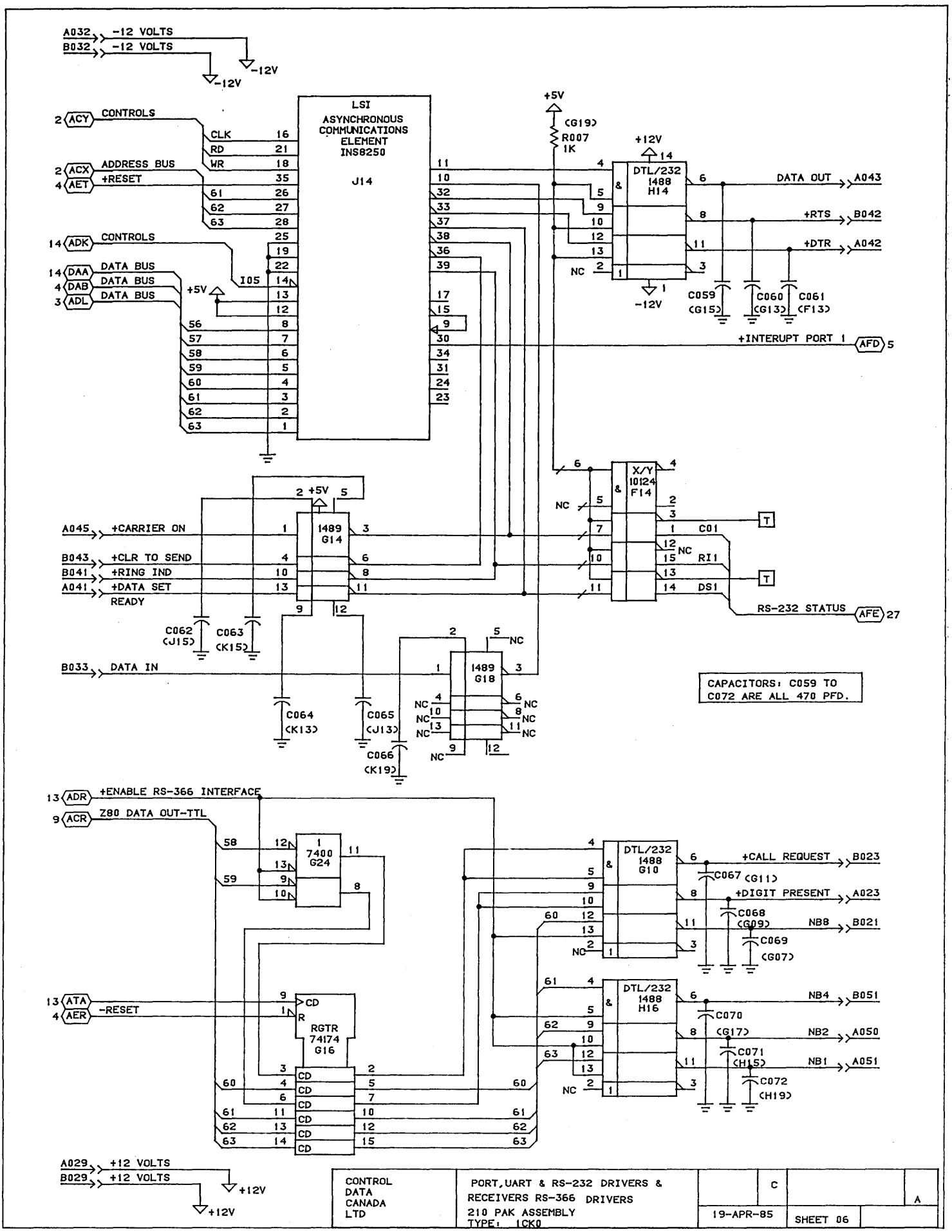
A032 -12 VOLTS
B032 -12 VOLTS
-12V
LSI
ASYNCHRONOUS
COMMUNICATIONS
ELEMENT
INS8250
J14
2 ACY CONTROLS
2 ACX ADDRESS BUS
4 AET +RESET
14 ADK CONTROLS
14 DAA DATA BUS
4 DAB DATA BUS
3 ADL DATA BUS
CLK
RD
WR
I05
+5V
(G19)
R007
1K
+12V
DTL/232
1488
H14
DATA OUT A043
+RTS B042
+DTR A042
NC
C059 (G15)
C060 (G13)
C061 (F13)
+INTERUPT PORT 1 AFD 5
X/Y
10124
F14
C01
RI1
DS1
RS-232 STATUS AFE 27
A045 +CARRIER ON
B043 +CLR TO SEND
B041 +RING IND
A041 +DATA SET READY
1489
G14
C062 (J15)
C063 (K15)
B033 DATA IN
1489
G18
C064 (K13)
C065 (J13)
C066 (K19)
CAPACITORS: C059 TO C072 ARE ALL 470 PFD.
13 ADR +ENABLE RS-366 INTERFACE
9 ACR Z80 DATA OUT-TTL
7400
G24
DTL/232
1488
G10
+CALL REQUEST B023
+DIGIT PRESENT A023
NB8 B021
C067 (G11)
C068 (G09)
C069 (G07)
13 ATA
4 AER -RESET
RGTR
74174
G16
CD
DTL/232
1488
H16
NB4 B051
NB2 A050
NB1 A051
C070 (G17)
C071 (H15)
C072 (H19)
A029 +12 VOLTS
B029 +12 VOLTS
+12V
CONTROL
DATA
CANADA
LTD
PORT, UART & RS-232 DRIVERS &
RECEIVERS RS-366 DRIVERS
210 PAK ASSEMBLY
TYPE: 1CK0
C
A
19-APR-85
SHEET 06

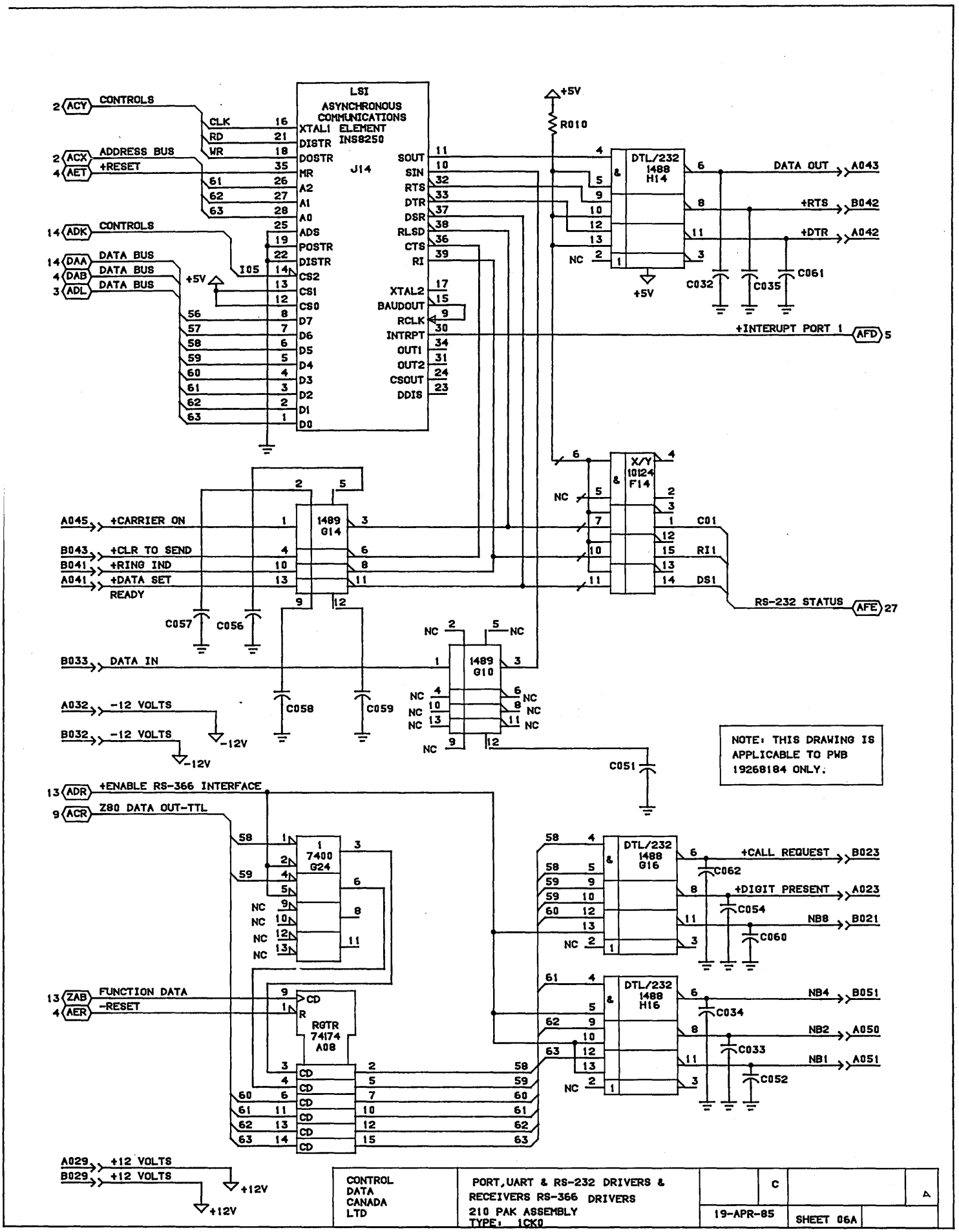
LSI
ASYNCHRONOUS
COMMUNICATIONS
ELEMENT
INS8250
J14
CONTROLS
ADDRESS BUS
+RESET
CONTROLS
DATA BUS
DATA BUS
DATA BUS
+5V
R010
DTL/232
1488
H14
DATA OUT
+RTS
+DTR
C032
C035
C061
+INTERUPT PORT 1
X/Y
10124
F14
1489
G14
+CARRIER ON
+CLR TO SEND
+RING IND
+DATA SET
READY
C01
RI1
DS1
RS-232 STATUS
C057
C056
1489
G10
DATA IN
-12 VOLTS
-12 VOLTS
-12V
C058
C059
C051
NOTE: THIS DRAWING IS
APPLICABLE TO PWB
19268184 ONLY.
+ENABLE RS-366 INTERFACE
Z80 DATA OUT-TTL
7400
G24
DTL/232
1488
G16
+CALL REQUEST
+DIGIT PRESENT
NB8
C062
C054
C060
FUNCTION DATA
-RESET
RGTR
74174
A08
DTL/232
1488
H16
NB4
NB2
NB1
C034
C033
C052
+12 VOLTS
+12 VOLTS
+12V
+12V
CONTROL
DATA
CANADA
LTD
PORT,UART & RS-232 DRIVERS &
RECEIVERS RS-366 DRIVERS
210 PAK ASSEMBLY
TYPE: 1CK0
C
A
19-APR-85
SHEET 06A

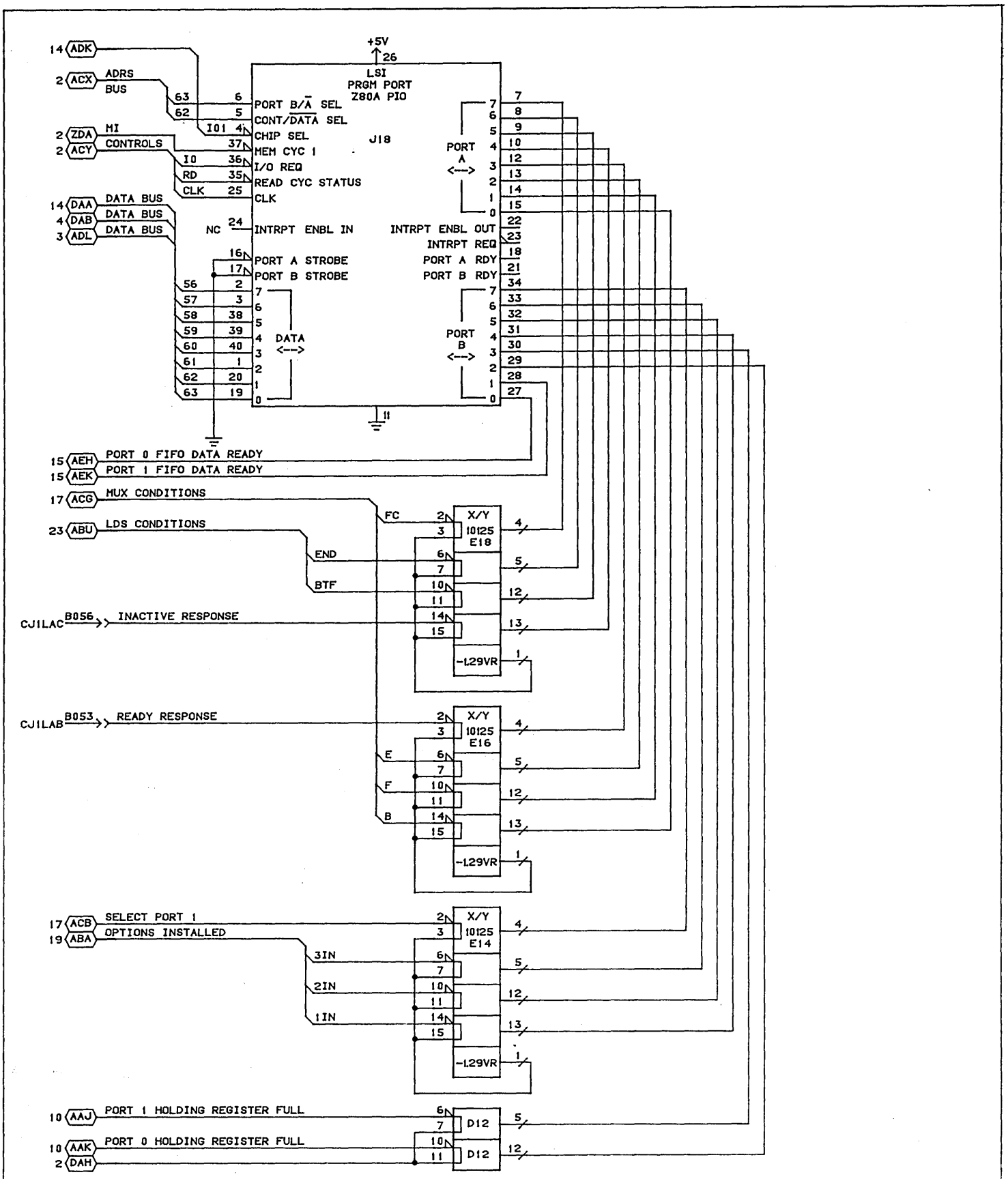

CONTROL DATA CANADA LTD	STATUS INPUT PORTS 210 PAK ASSEMBLY TYPE: 1CK0	C		A
		19-APR-85	SHEET 07	

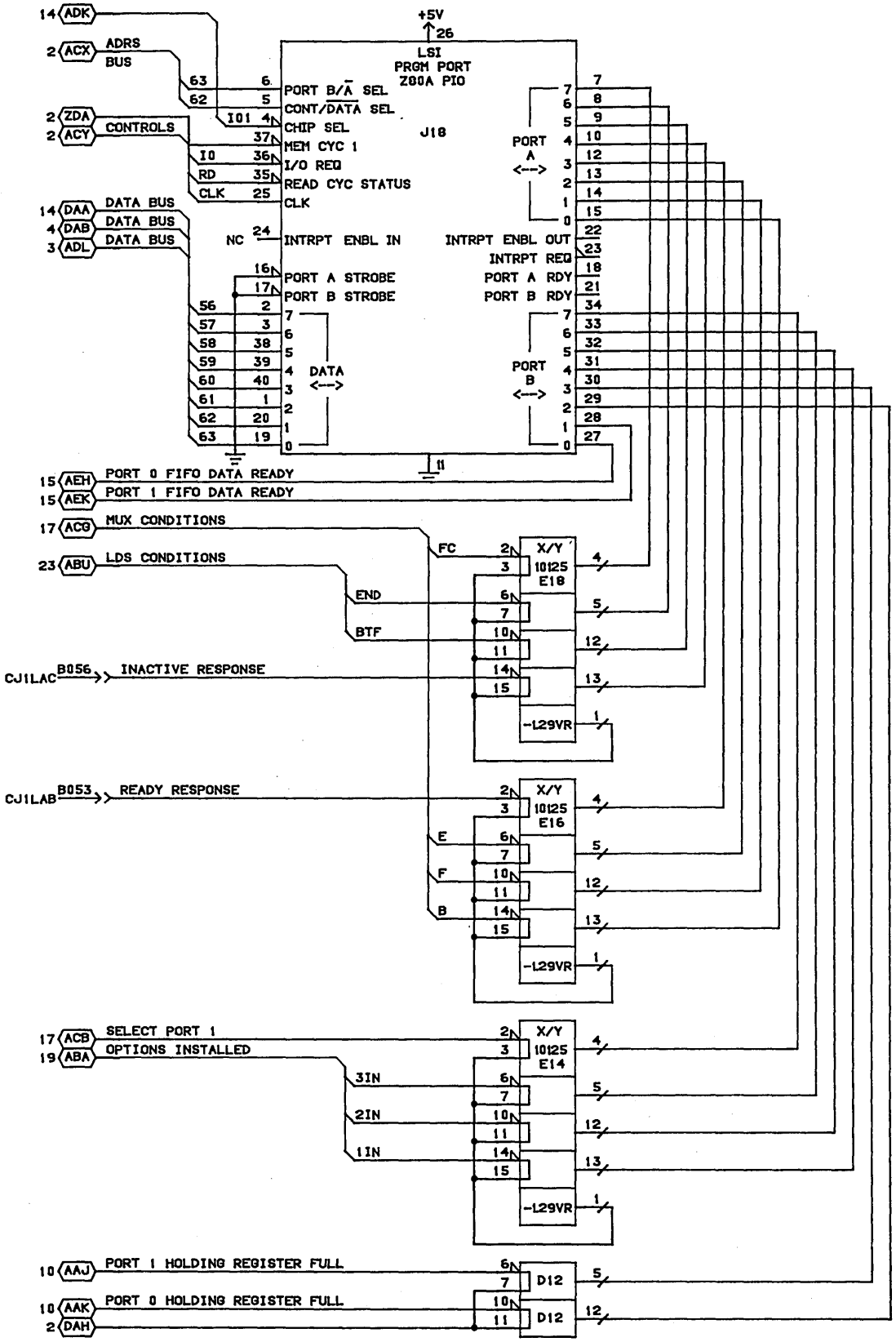

NOTE: THIS DRAWING IS APPLICABLE TO PWB 19268184 ONLY.

CONTROL DATA CANADA LTD	STATUS INPUT PORTS 210 PAK ASSEMBLY TYPE: 1CK0		C	A
		19-APR-85	SHEET 07A	

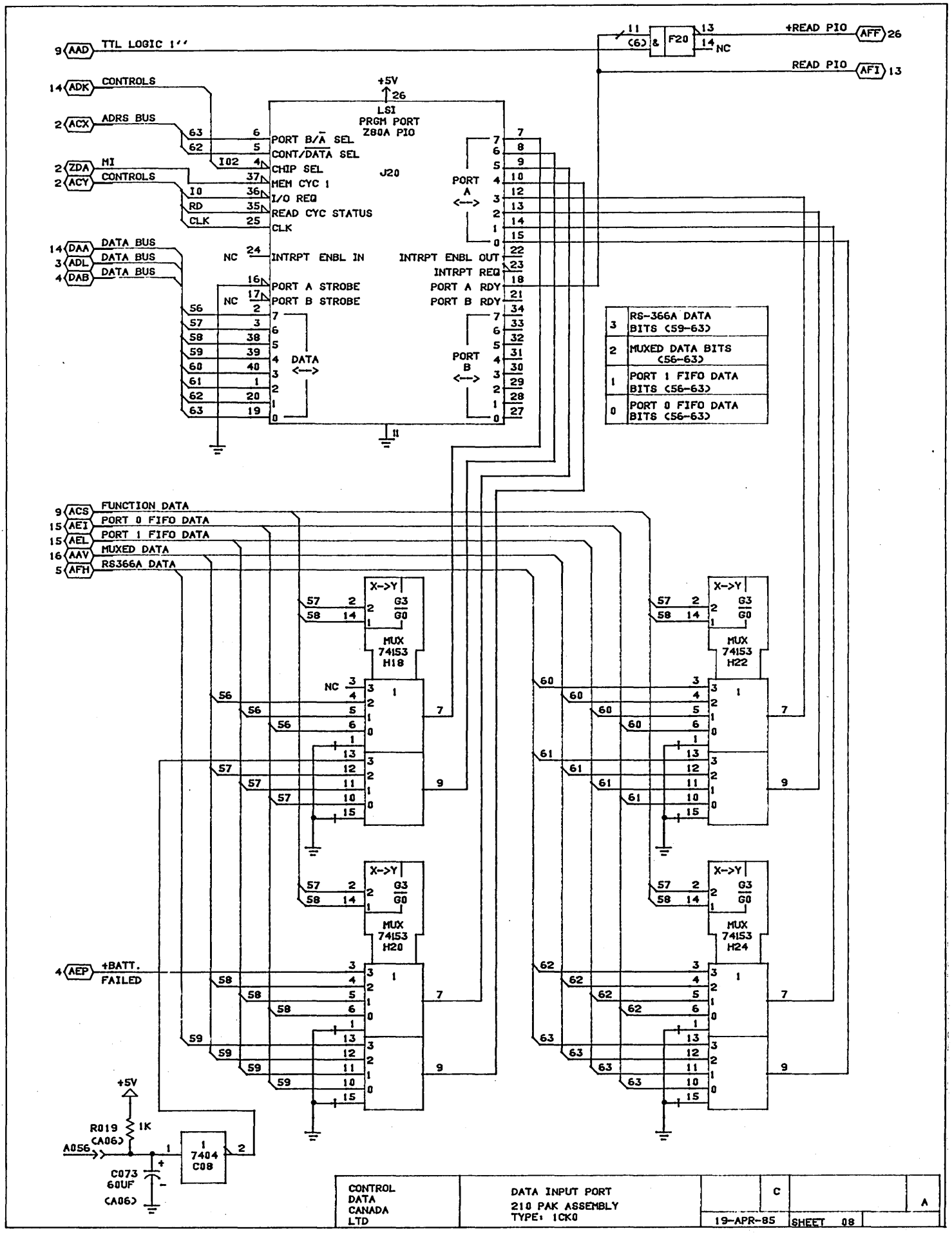
TTL LOGIC 1''
CONTROLS
ADRS BUS
MI
CONTROLS
DATA BUS
DATA BUS
DATA BUS
+5V
LSI
PRGM PORT
Z80A PIO
J20
PORT B/A SEL
CONT/DATA SEL
CHIP SEL
MEM CYC 1
I/O REQ
READ CYC STATUS
CLK
INTRPT ENBL IN
PORT A STROBE
PORT B STROBE
DATA
PORT A
PORT B
INTRPT ENBL OUT
INTRPT REQ
PORT A RDY
PORT B RDY
+READ PIO
READ PIO
F20
RS-366A DATA BITS (59-63)
MUXED DATA BITS (56-63)
PORT 1 FIFO DATA BITS (56-63)
PORT 0 FIFO DATA BITS (56-63)
FUNCTION DATA
PORT 0 FIFO DATA
PORT 1 FIFO DATA
MUXED DATA
RS366A DATA
MUX 74153 H18
MUX 74153 H22
MUX 74153 H20
MUX 74153 H24
+BATT. FAILED
R019 1K
C073 60UF
7404 C08
CONTROL DATA CANADA LTD
DATA INPUT PORT
210 PAK ASSEMBLY
TYPE: 1CK0
19-APR-85
SHEET 08

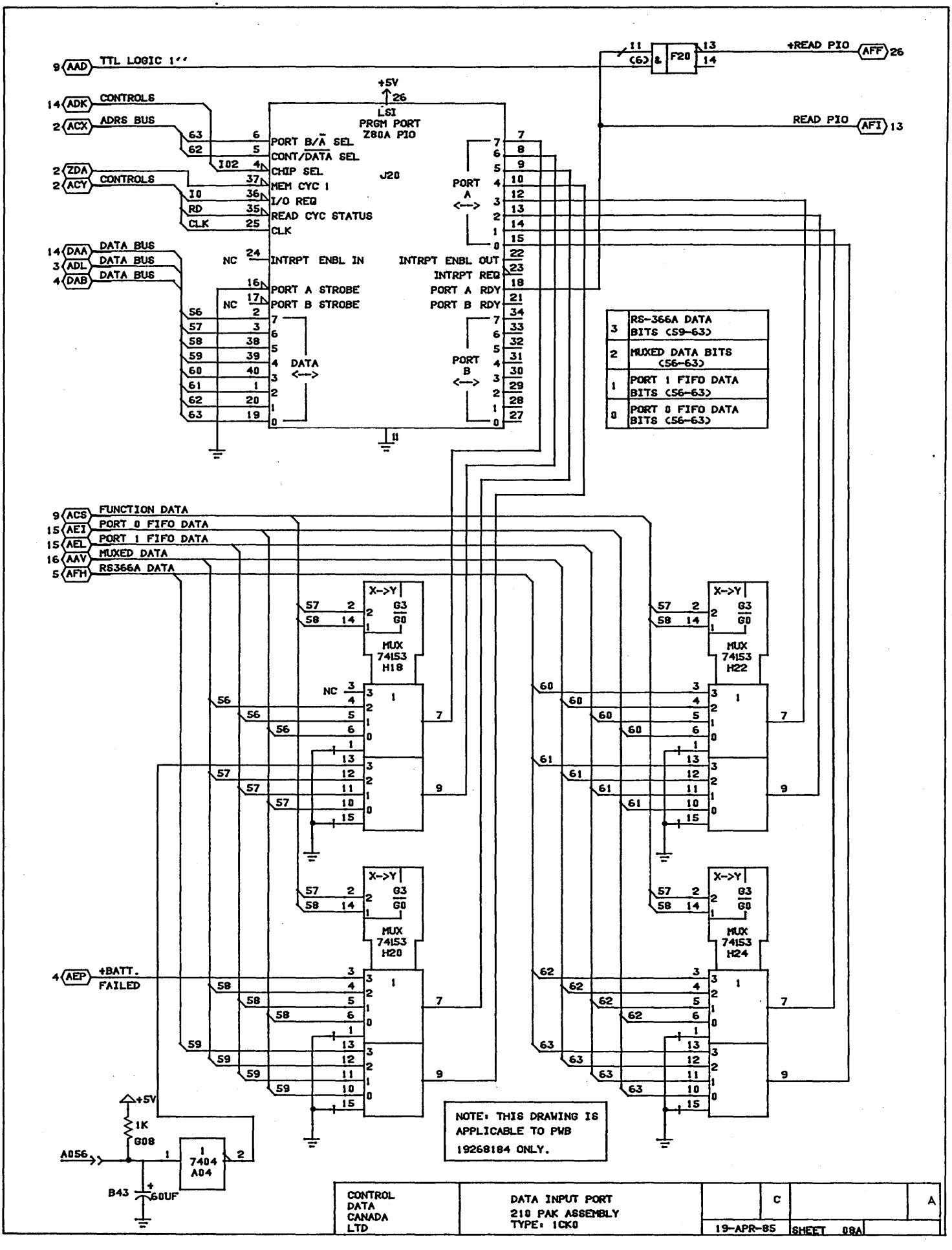
TTL LOGIC 1''
CONTROLS
ADRS BUS
CONTROLS
DATA BUS
DATA BUS
DATA BUS
+5V
LSI
PRGM PORT
Z80A PIO
J20
PORT B/A SEL
CONT/DATA SEL
CHIP SEL
MEM CYC 1
I/O REQ
READ CYC STATUS
CLK
INTRPT ENBL IN
PORT A STROBE
PORT B STROBE
DATA
PORT A
PORT B
INTRPT ENBL OUT
INTRPT REQ
PORT A RDY
PORT B RDY
+READ PIO
READ PIO
F20
RS-366A DATA BITS (59-63)
MUXED DATA BITS (56-63)
PORT 1 FIFO DATA BITS (56-63)
PORT 0 FIFO DATA BITS (56-63)
FUNCTION DATA
PORT 0 FIFO DATA
PORT 1 FIFO DATA
MUXED DATA
RS366A DATA
MUX 74153 H18
MUX 74153 H22
MUX 74153 H20
MUX 74153 H24
+BATT. FAILED
+5V
1K
G08
A056
7404 A04
B43
60UF
NOTE: THIS DRAWING IS APPLICABLE TO PWB 19268184 ONLY.
CONTROL DATA CANADA LTD
DATA INPUT PORT
210 PAK ASSEMBLY
TYPE: 1CK0
19-APR-85
SHEET 08A

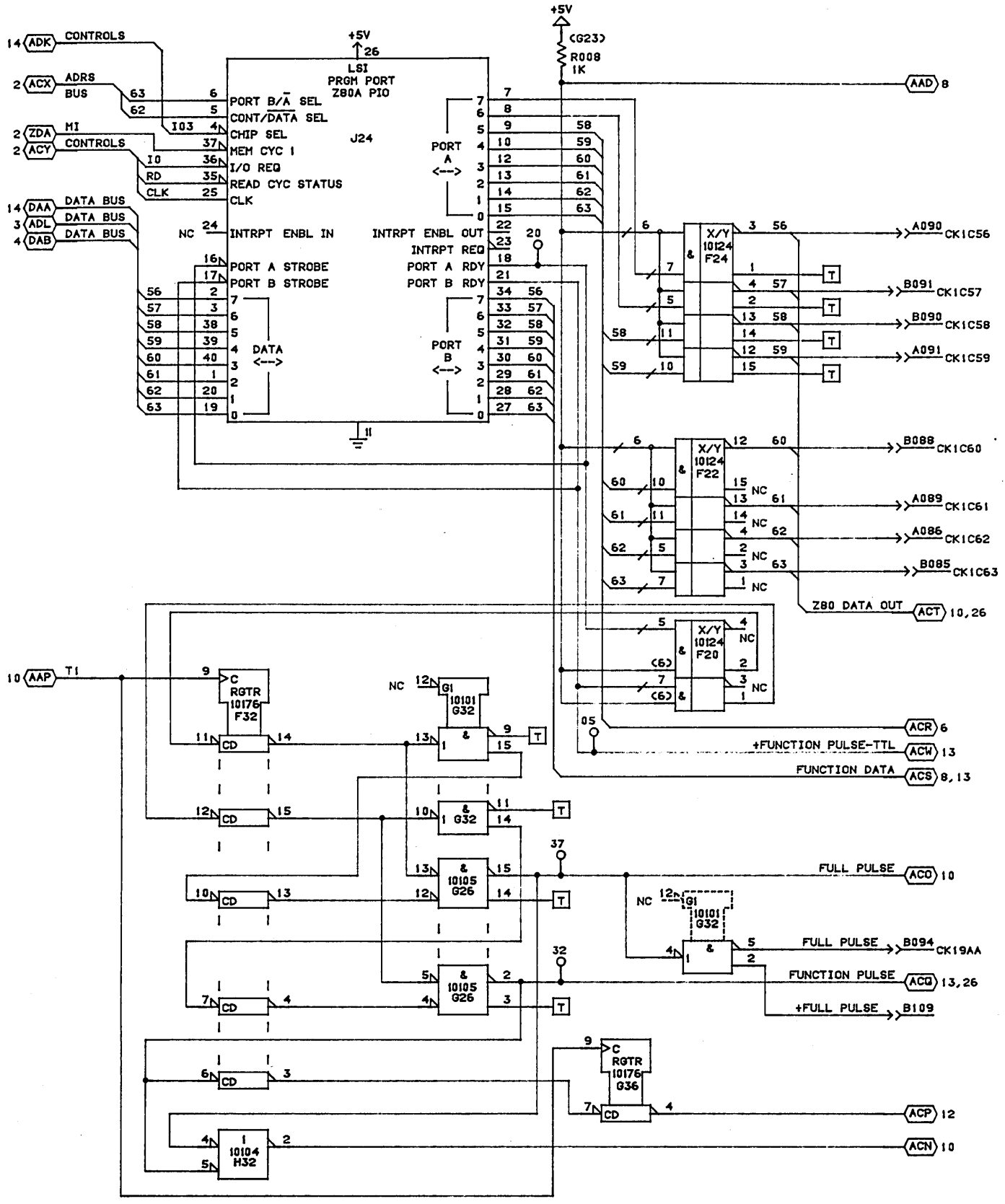

CONTROL DATA CANADA LTD	OUTPUT PORTS (FUNCTION,DATA) 210 PAK ASSEMBLY TYPE: 1CK0	C	A
		23-APR-85	SHEET 09

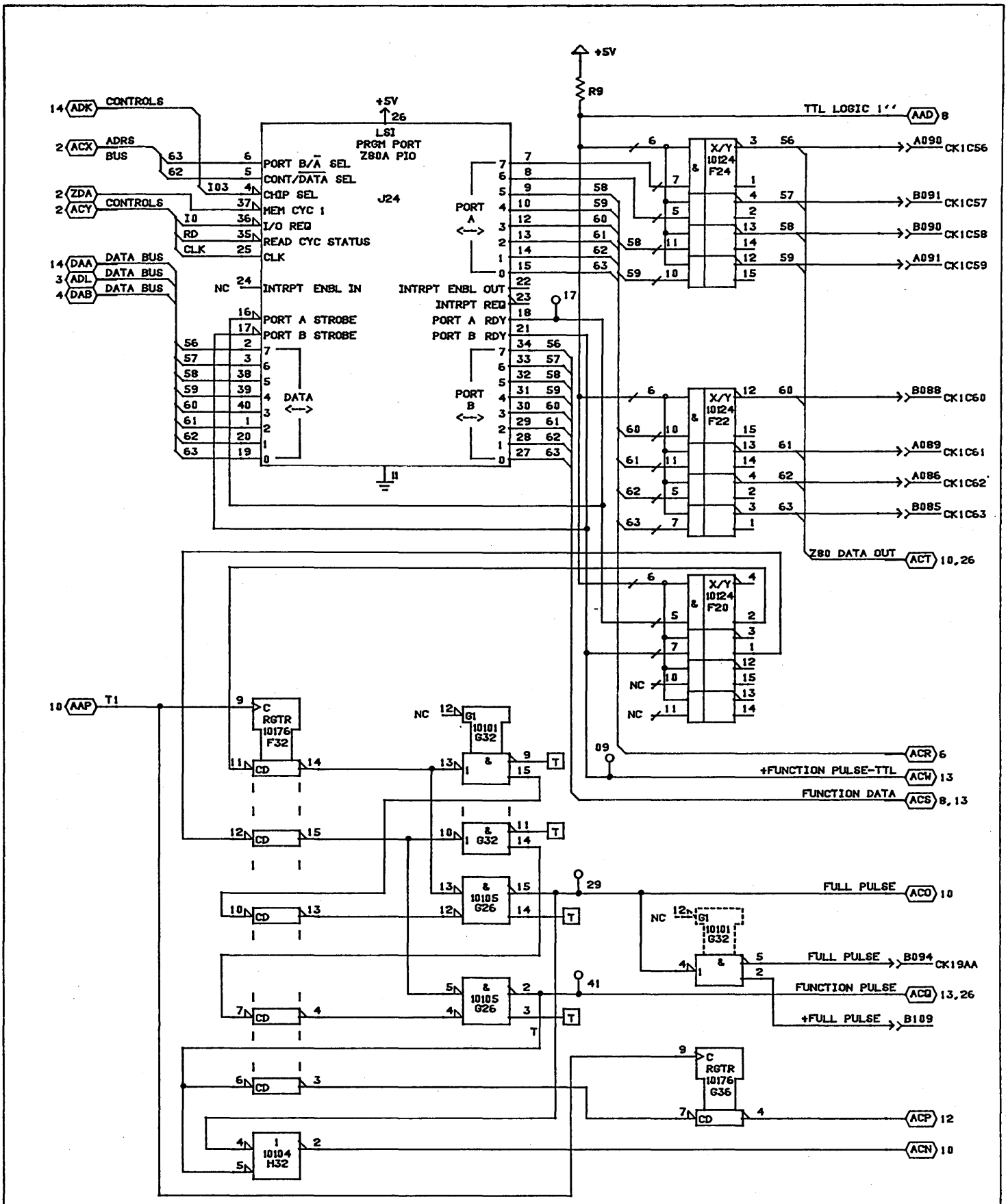

NOTE: THIS DRAWING IS APPLICABLE TO PWB 19268184 ONLY.

CONTROL DATA CANADA LTD	OUTPUT PORTS (FUNCTION,DATA) 210 PAK ASSEMBLY TYPE: 1CK0	C		A
		19-APR-85	SHEET 09A	

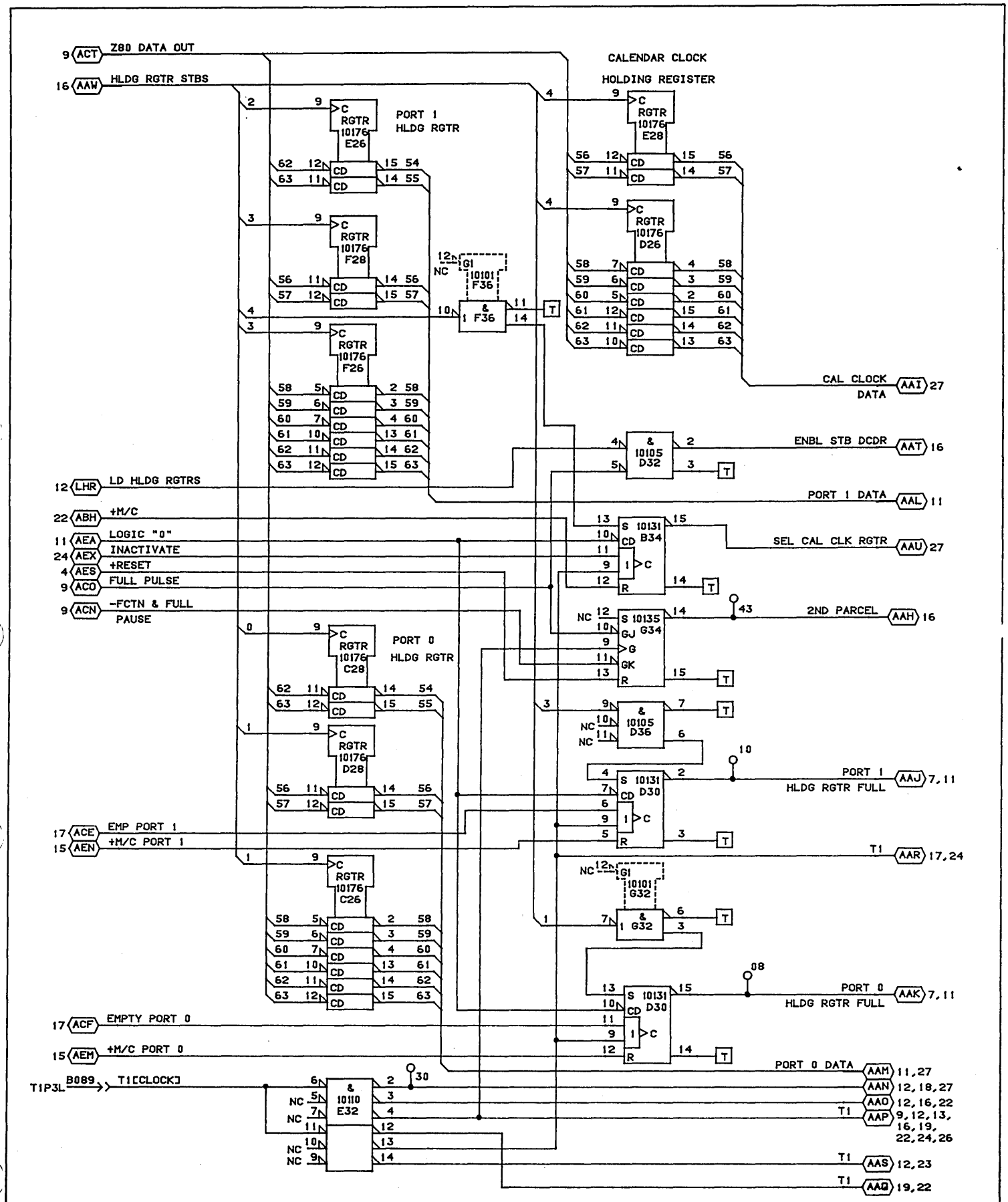

CONTROL DATA CANADA LTD	HOLDING REGISTERS 210 PAK ASSEMBLY TYPE: 1CK0	C		A
		24-APR-85	SHEET 10	

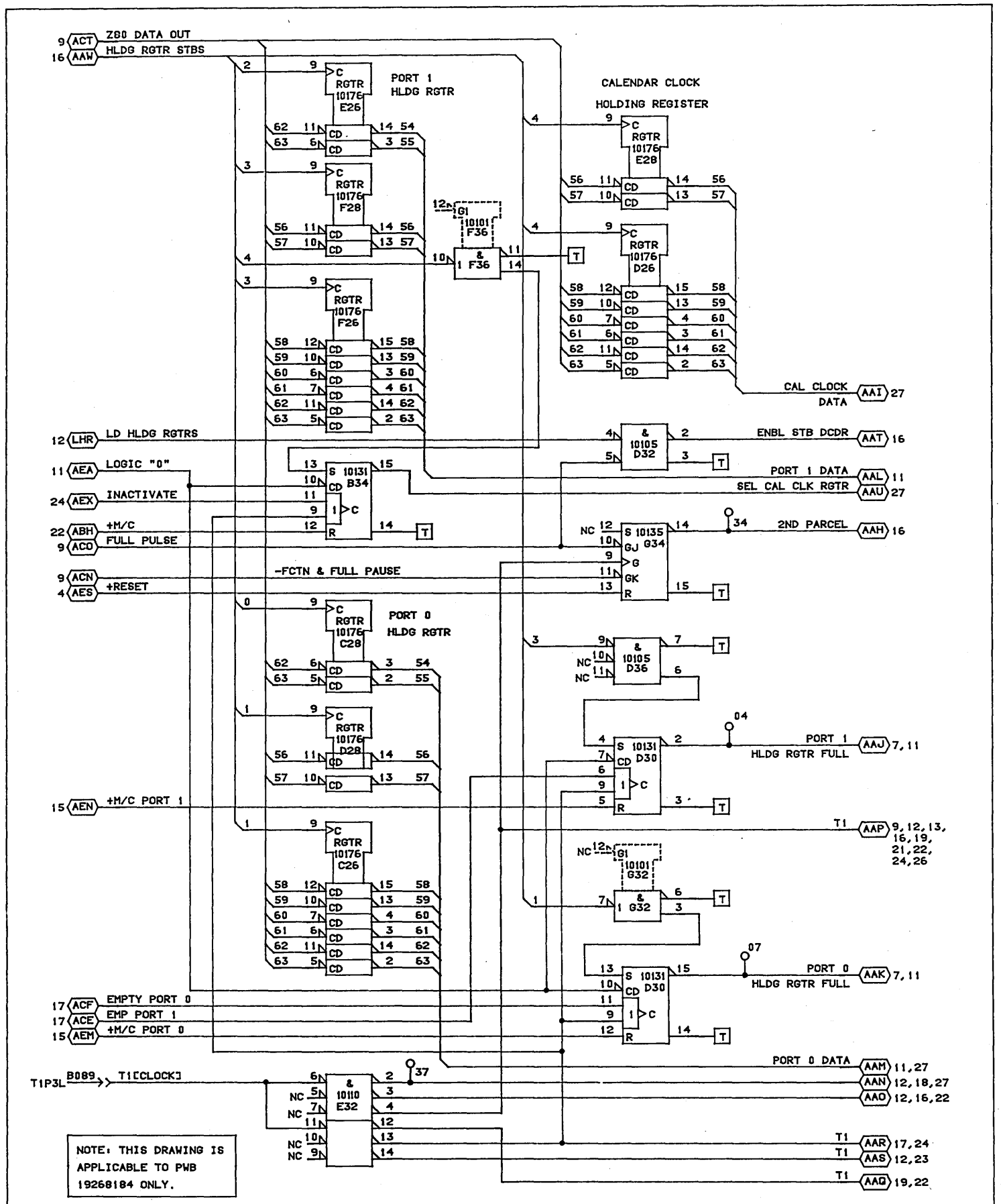

CONTROL DATA CANADA LTD	HOLDING REGISTERS 210 PAK ASSEMBLY TYPE: 1CK0	C		A
		23-APR-85	SHEET 10A	

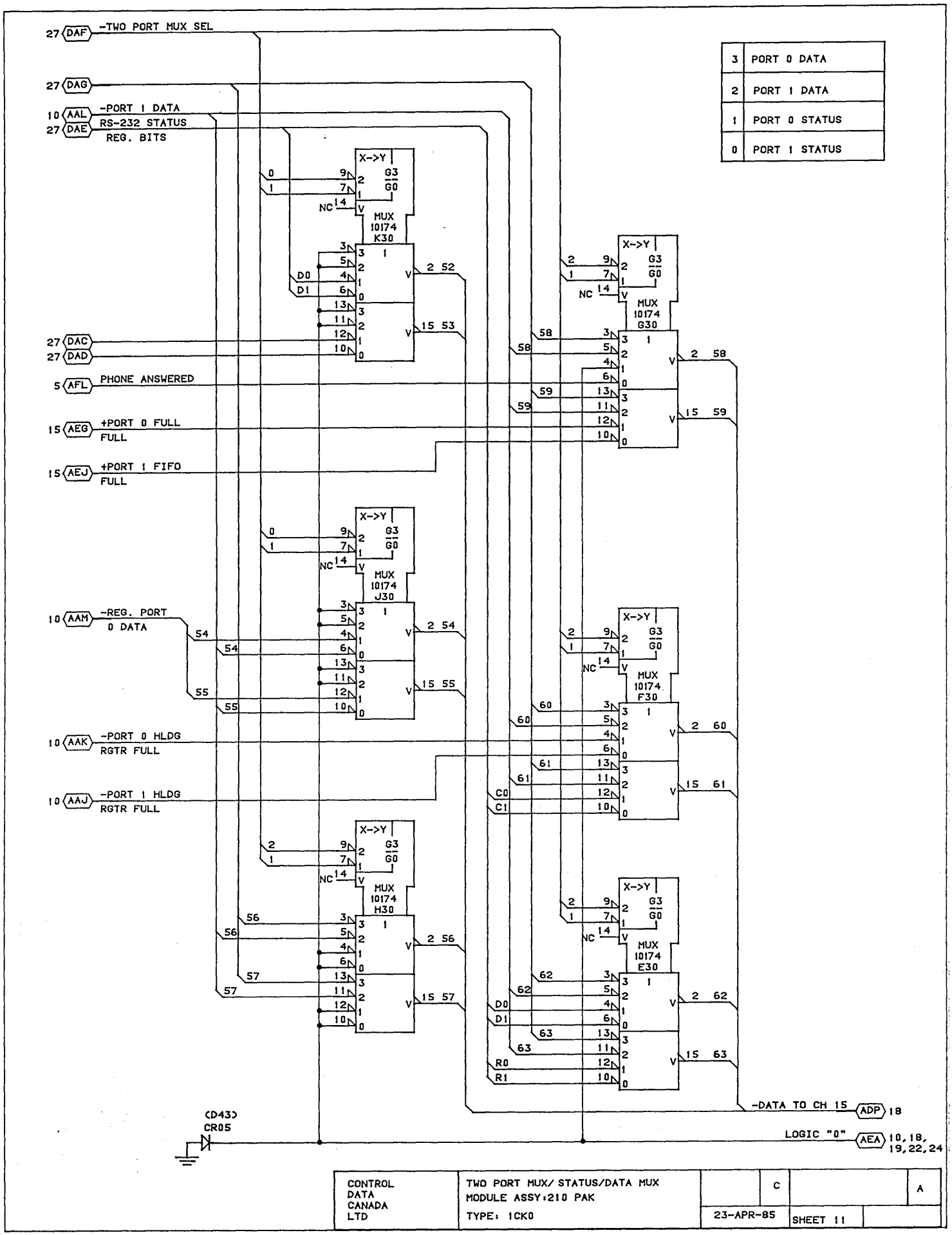

CONTROL DATA CANADA LTD	TWO PORT MUX/ STATUS/DATA MUX MODULE ASSY:210 PAK TYPE: 1CK0		C	A
		23-APR-85	SHEET 11	

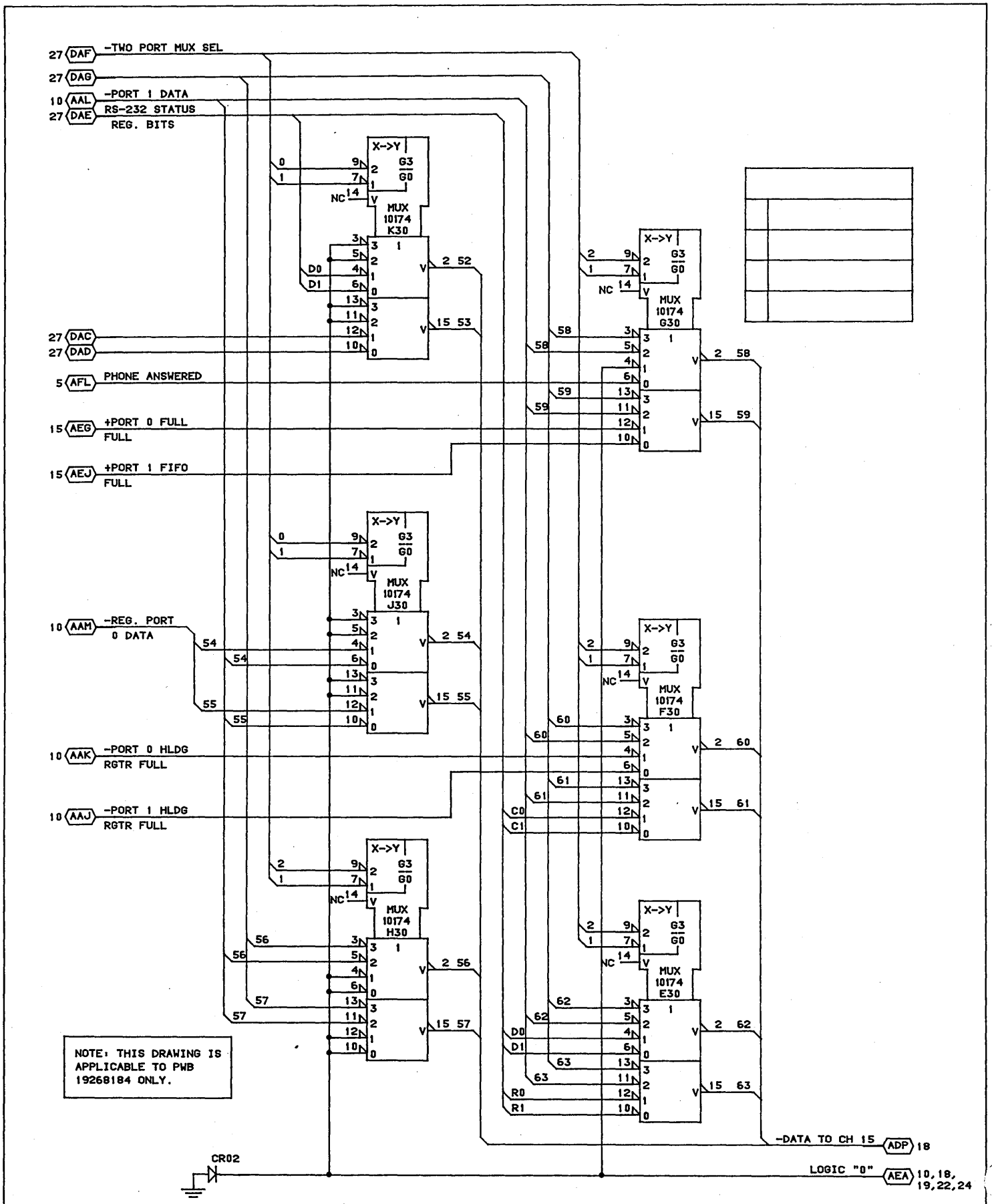

CONTROL DATA CANADA LTD	TWO PORT MUX/ STATUS/DATA MUX MODULE ASSY:210 PAK TYPE: 1CK0	C		A
		23-APR-85	SHEET 11A	

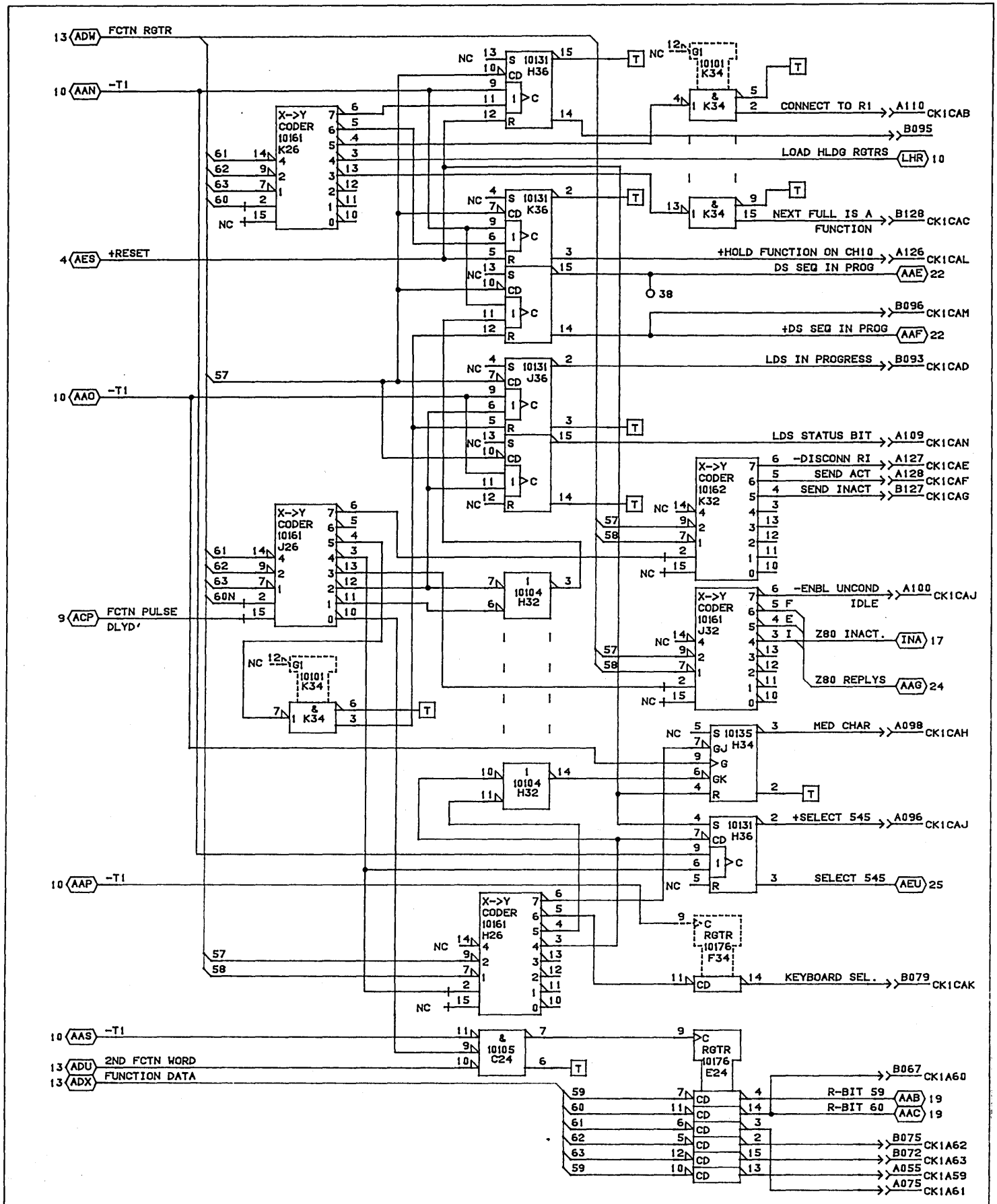

CONTROL DATA CANADA LTD	Z80 FUNCTION DECODER 210 PAK ASSEMBLY TYPE: 1CK0	C		A
		23-APR-85	SHEET 12	

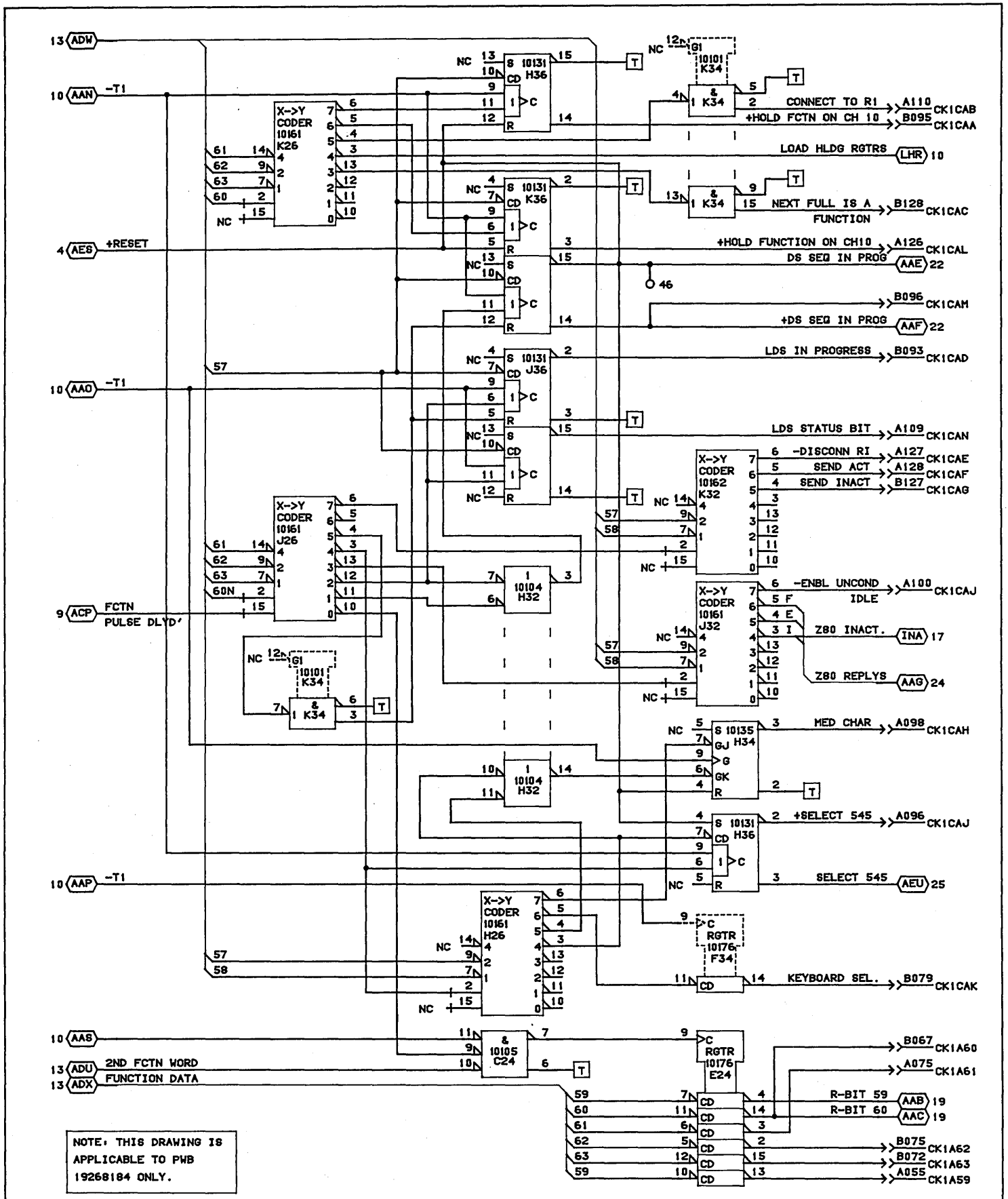

NOTE: THIS DRAWING IS APPLICABLE TO PWB 19268184 ONLY.

CONTROL DATA CANADA LTD	Z80 FUNCTION DECODER 210 PAK ASSEMBLY TYPE: 1CK0		C	A
		23-APR-85	SHEET 12A	

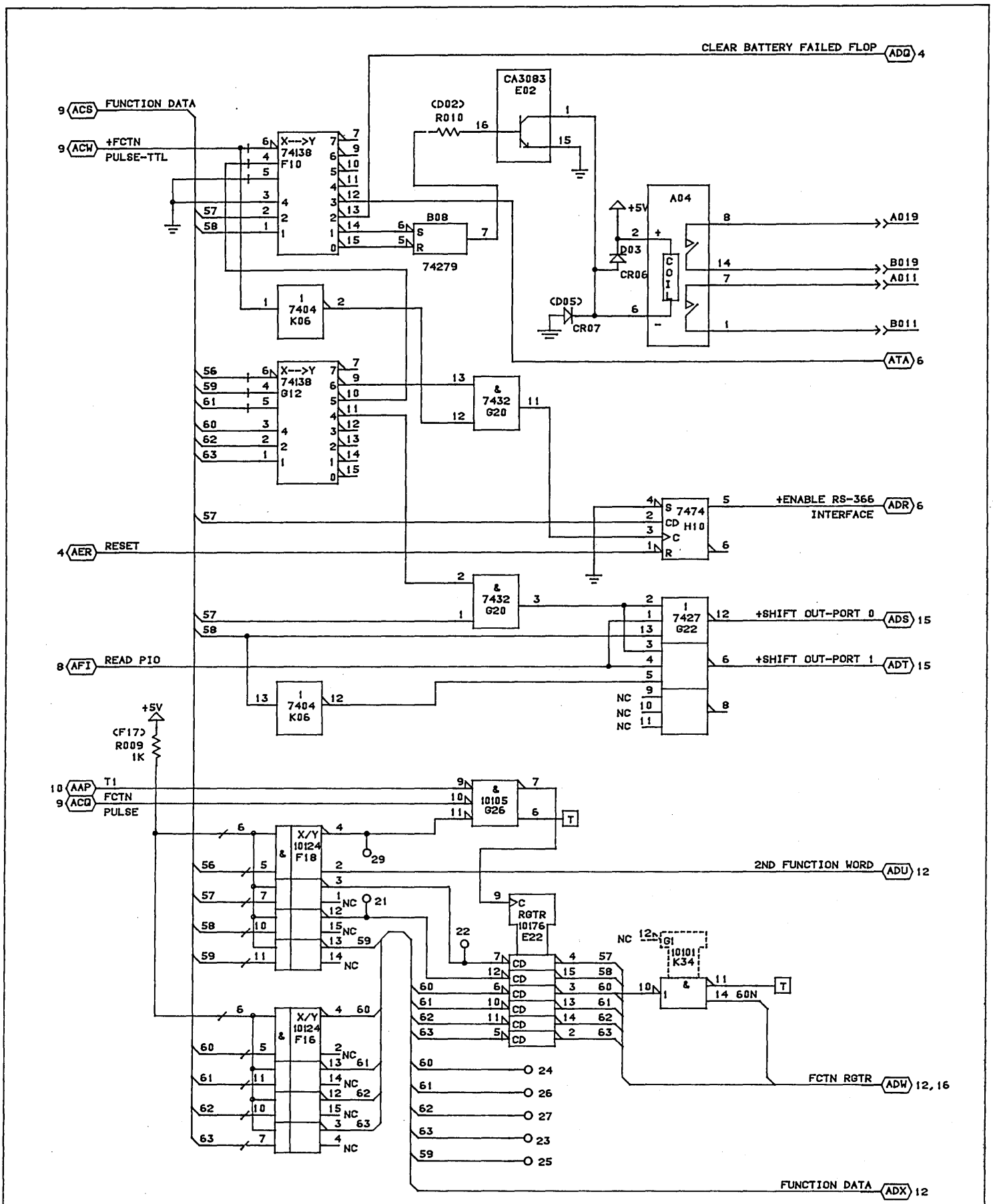

CONTROL DATA CANADA LTD	Z80 FUNCTION CONVERSION & TTL DECODING 210 PAK ASSEMBLY TYPE: 1CK0	C		A
		23-APR-85	SHEET 13	

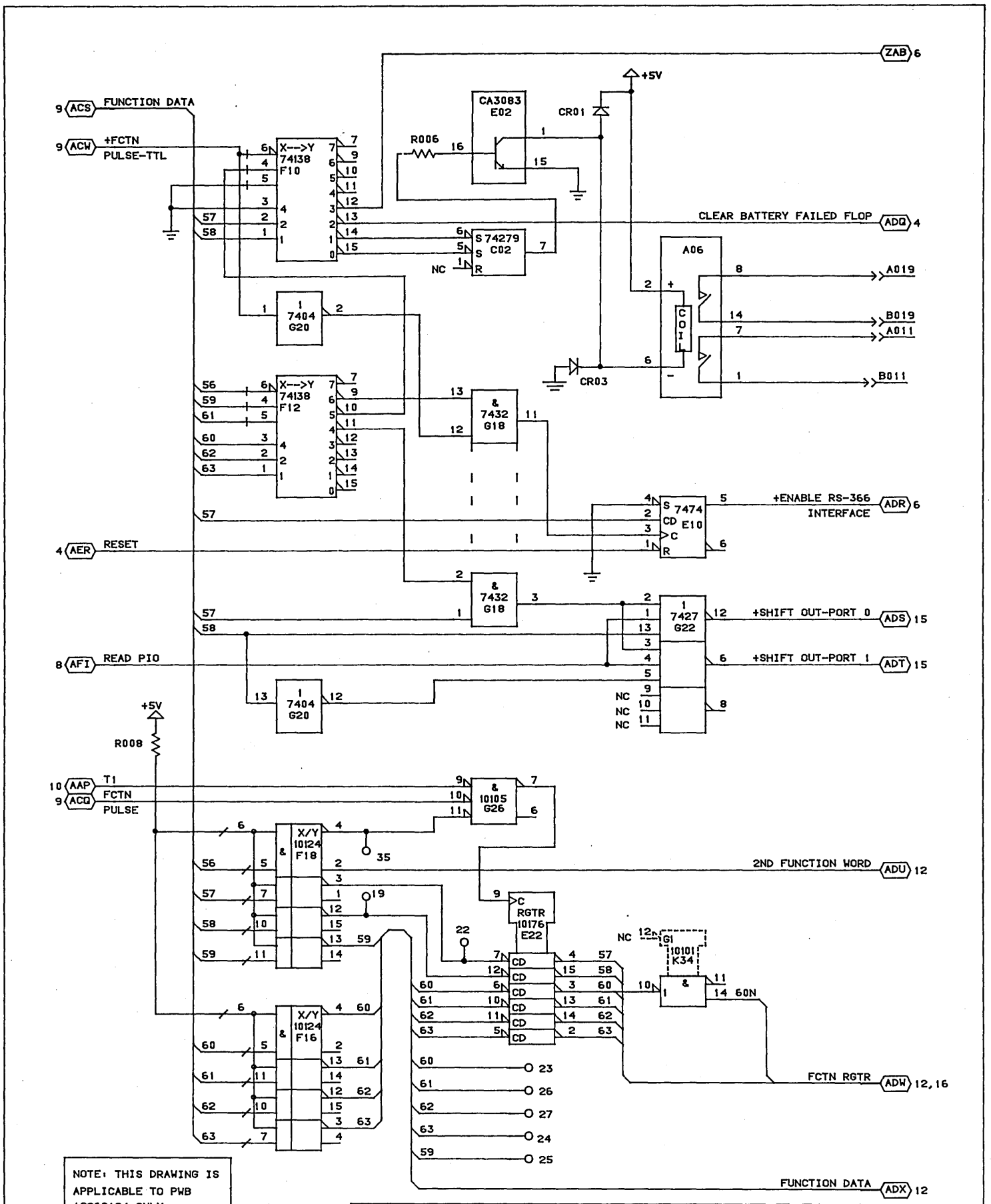

NOTE: THIS DRAWING IS APPLICABLE TO PWB 19268184 ONLY.

CONTROL DATA CANADA LTD	Z80 FUNCTION CONVERSION & TTL DECODING 210 PAK ASSEMBLY TYPE: 1CK0	C		A
		26-APR-85	SHEET 13A	

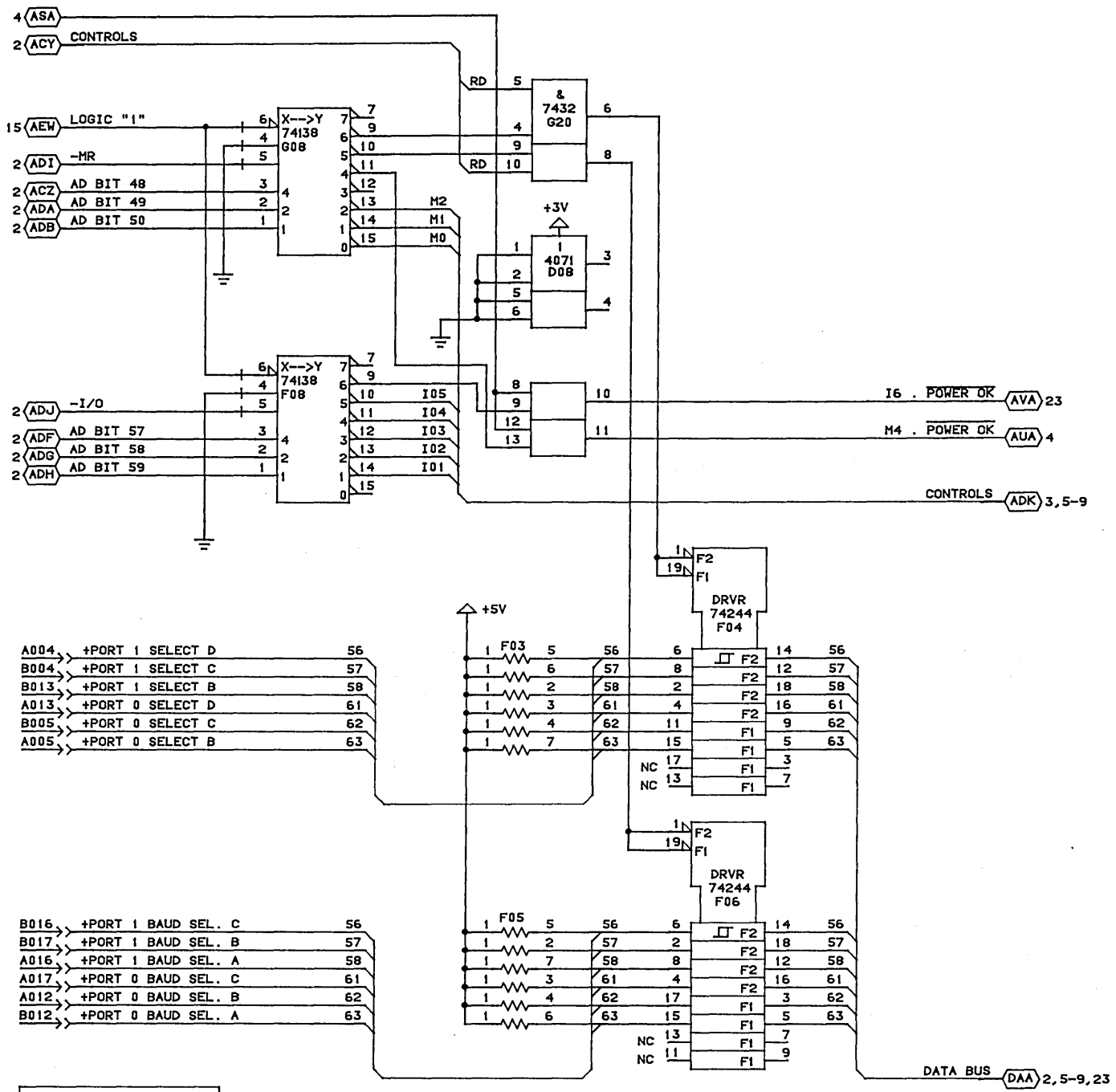

NOTE:
RESISTORS F03 AND F05
ARE ALL 4.7 KOHM

CONTROL DATA CANADA LTD	ADDRESS DECODER SWITCH DRIVERS 210 PAK ASSEMBLY TYPE: 1CK0	C		A
		19-APR-85	SHEET 14	

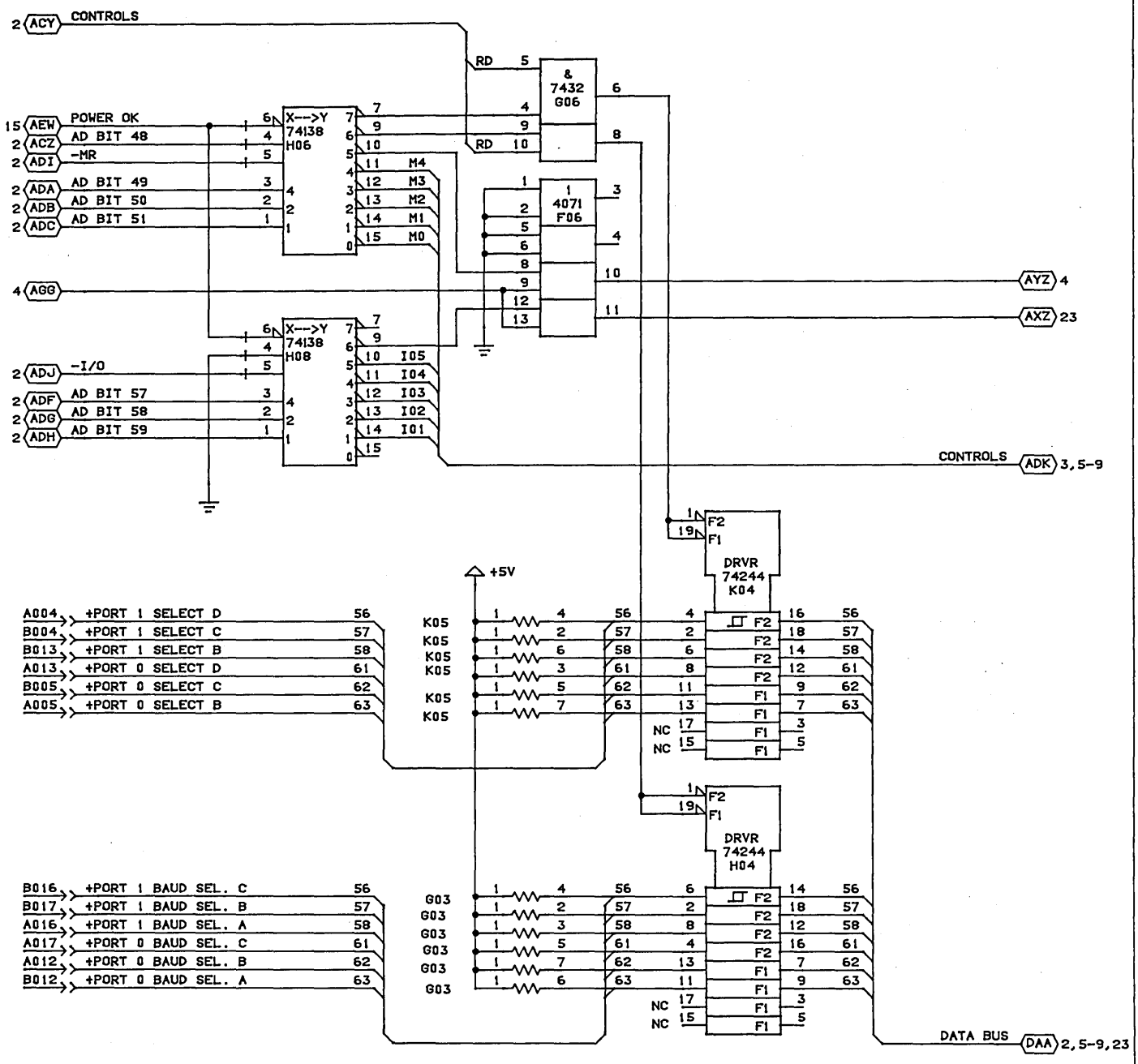

NOTE: THIS DRAWING IS APPLICABLE TO PWB 19268184 ONLY.

CONTROL DATA CANADA LTD	ADDRESS DECODER SWITCH DRIVERS 210 PAK ASSEMBLY TYPE: 1CK0	C		A
		23-APR-85	SHEET 14A	

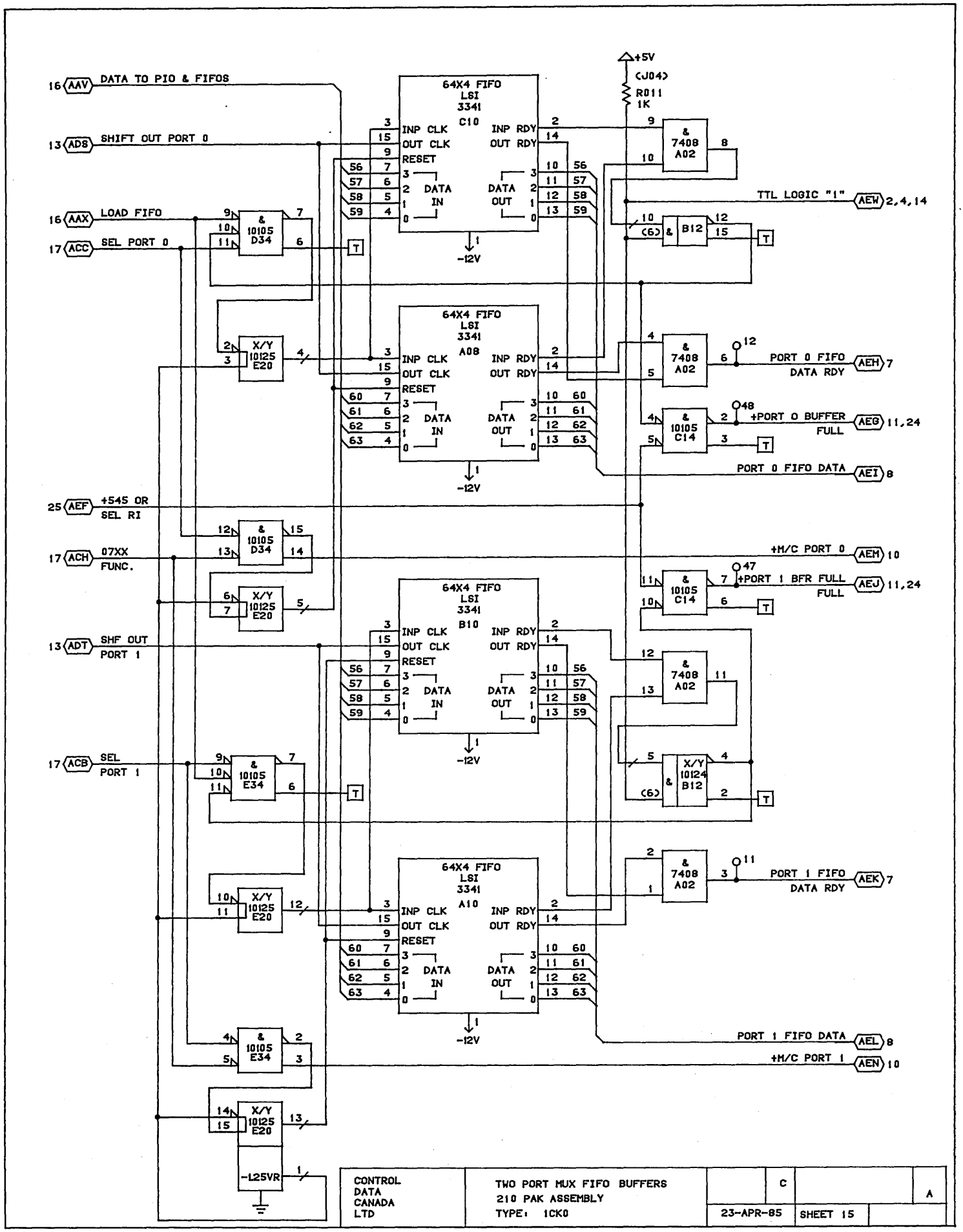
16 AAV DATA TO PIO & FIFOS
13 ADS SHIFT OUT PORT 0
16 AAX LOAD FIFO
17 ACC SEL PORT 0
25 AEF +545 OR SEL RI
17 ACH 07XX FUNC.
13 ADT SHF OUT PORT 1
17 ACB SEL PORT 1
64X4 FIFO LSI 3341 C10
64X4 FIFO LSI 3341 A08
64X4 FIFO LSI 3341 B10
64X4 FIFO LSI 3341 A10
INP CLK
OUT CLK
RESET
DATA IN
INP RDY
OUT RDY
DATA OUT
-12V
+5V
(J04)
R011 1K
& 7408 A02
TTL LOGIC "1" AEW 2,4,14
& B12
PORT 0 FIFO DATA RDY AEH 7
+PORT 0 BUFFER FULL AEG 11,24
PORT 0 FIFO DATA AEI 8
+M/C PORT 0 AEM 10
+PORT 1 BFR FULL AEJ 11,24
X/Y 10124 B12
PORT 1 FIFO DATA RDY AEK 7
PORT 1 FIFO DATA AEL 8
+M/C PORT 1 AEN 10
& 10105 D34
X/Y 10125 E20
& 10105 C14
& 10105 E34
-L25VR
CONTROL DATA CANADA LTD
TWO PORT MUX FIFO BUFFERS
210 PAK ASSEMBLY
TYPE: 1CK0
C
A
23-APR-85
SHEET 15

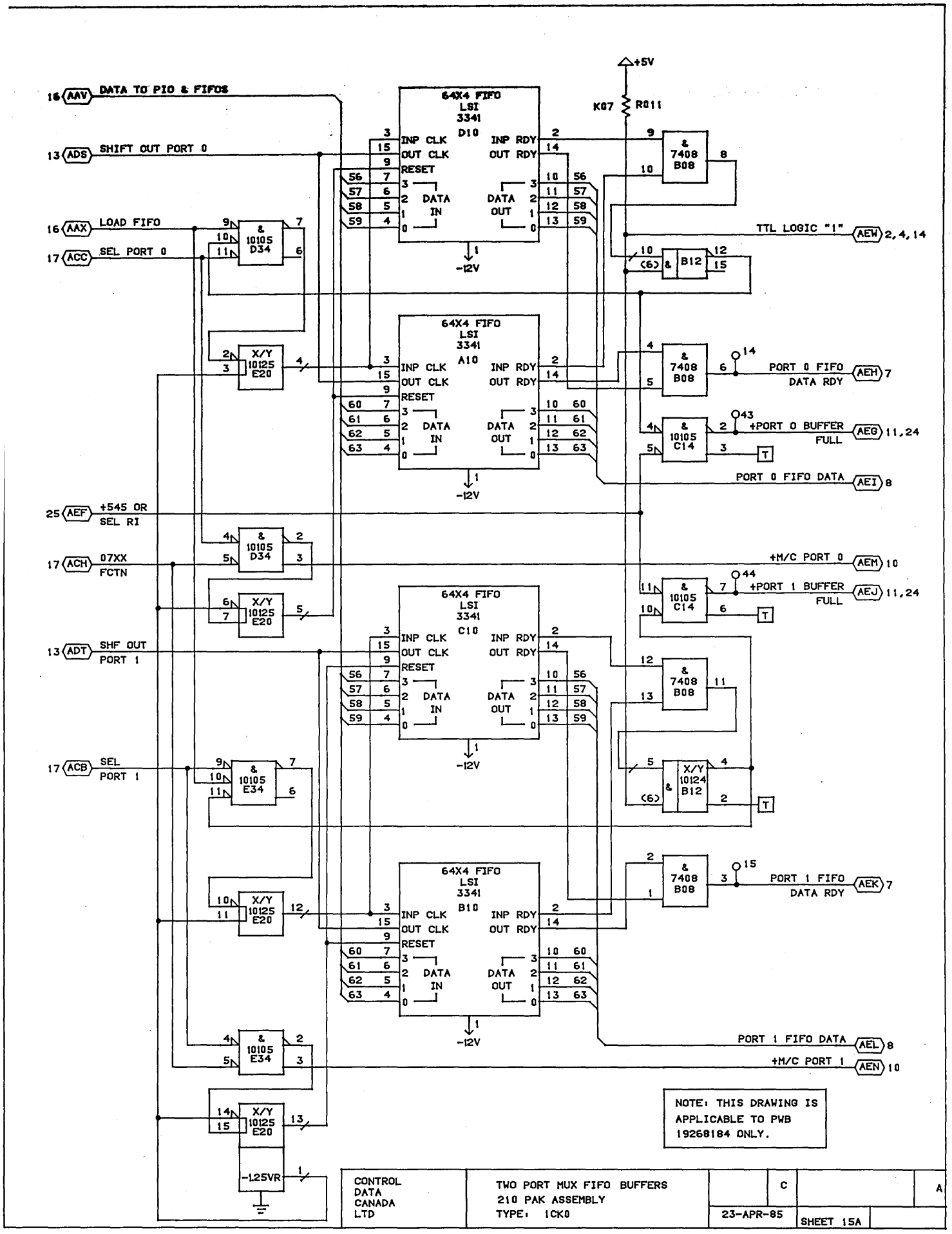
16 AAV DATA TO PIO & FIFOS
13 ADS SHIFT OUT PORT 0
16 AAX LOAD FIFO
17 ACC SEL PORT 0
25 AEF +545 OR SEL RI
17 ACH 07XX FCTN
13 ADT SHF OUT PORT 1
17 ACB SEL PORT 1
64X4 FIFO LSI 3341 D10
64X4 FIFO LSI 3341 A10
64X4 FIFO LSI 3341 C10
64X4 FIFO LSI 3341 B10
INP CLK
OUT CLK
RESET
DATA IN
INP RDY
OUT RDY
DATA OUT
-12V
+5V
K07
R011
TTL LOGIC "1" AEW 2,4,14
PORT 0 FIFO DATA RDY AEH 7
+PORT 0 BUFFER FULL AEG 11,24
PORT 0 FIFO DATA AEI 8
+M/C PORT 0 AEM 10
+PORT 1 BUFFER FULL AEJ 11,24
PORT 1 FIFO DATA RDY AEK 7
PORT 1 FIFO DATA AEL 8
+M/C PORT 1 AEN 10
-1.25VR
NOTE: THIS DRAWING IS APPLICABLE TO PWB 19268184 ONLY.
CONTROL DATA CANADA LTD
TWO PORT MUX FIFO BUFFERS
210 PAK ASSEMBLY
TYPE: 1CK0
C
A
23-APR-85
SHEET 15A

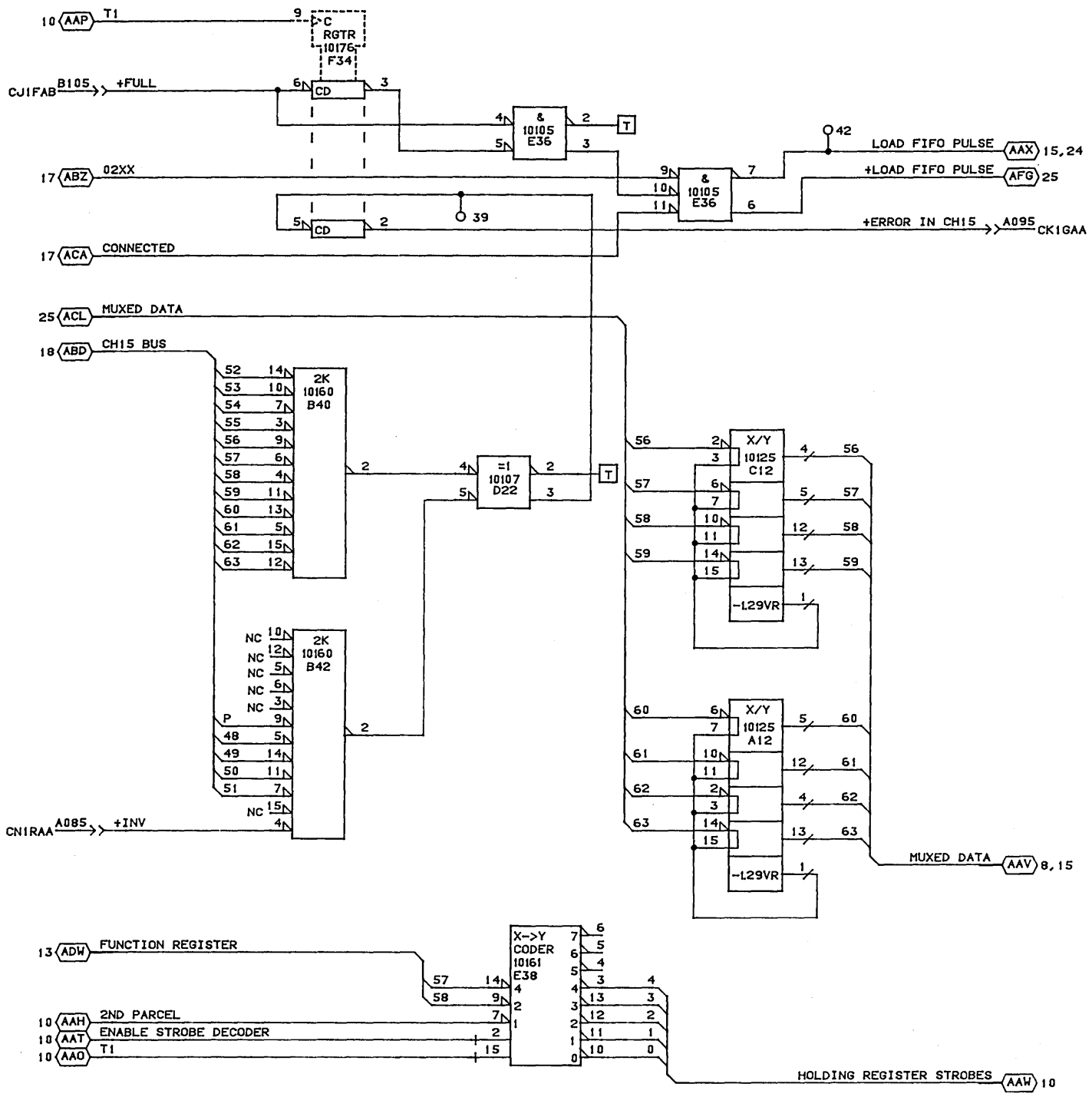

CONTROL DATA CANADA LTD	CH15 BUS PARITY CHECKER INPUT DATA, ECL/TTL/ CONVERSION 210 PAK ASSEMBLY TYPE: 1CK0	C		A
		19-APR-85	SHEET 16	

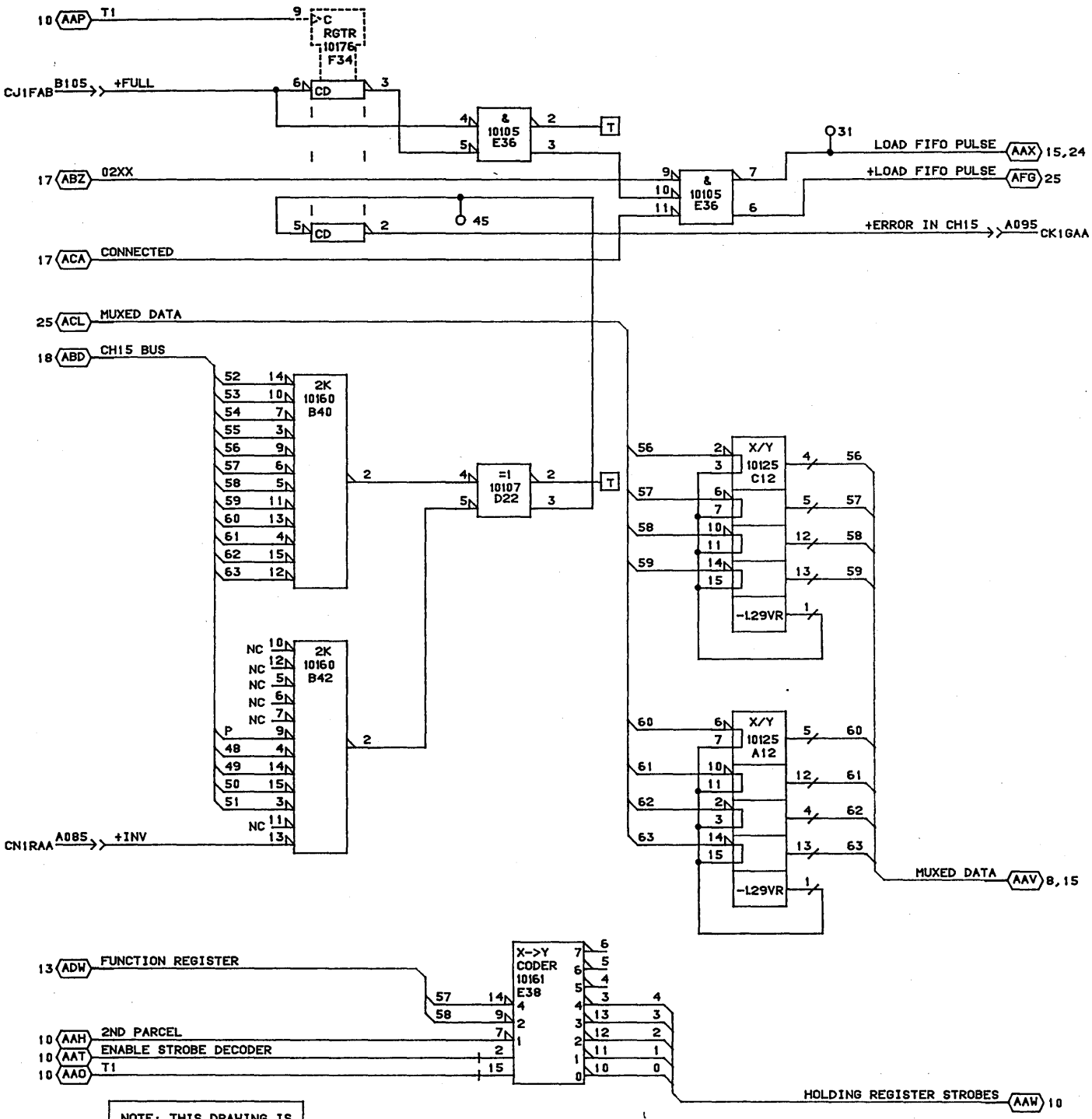

NOTE: THIS DRAWING IS APPLICABLE TO PWB 19268184 ONLY.

CONTROL DATA CANADA LTD	CH15 BUS PARITY CHECKER INPUT DATA, ECL/TTL/ CONVERSION 210 PAK ASSEMBLY TYPE: 1CK0	C		A
		23-APR-85	SHEET 16A	

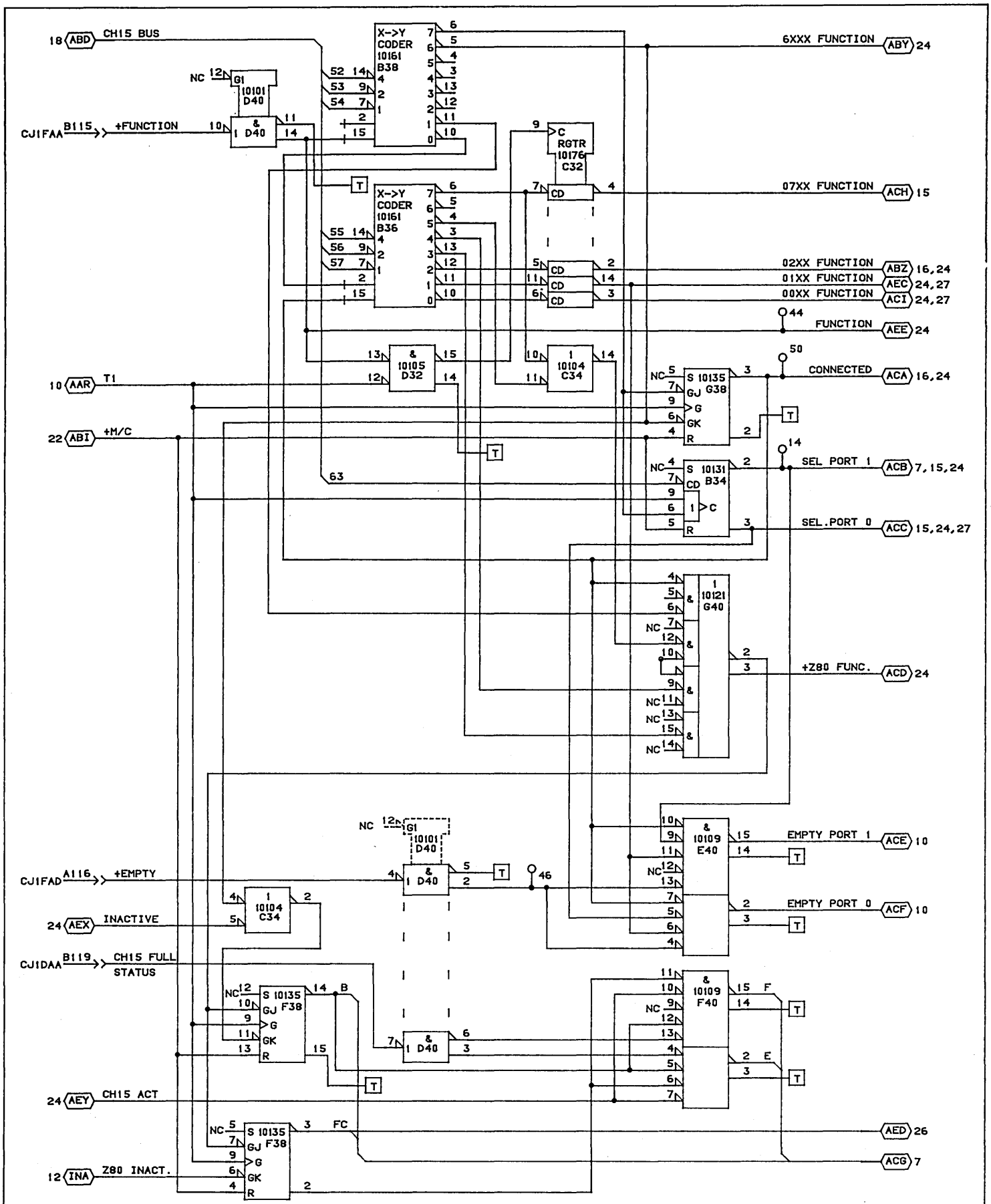

CONTROL DATA CANADA LTD	TWO PORT MUX FUNCTION DECODER 210 PAK ASSEMBLY TYPE: 1CK0	C		A
		19-APR-85	SHEET 17	

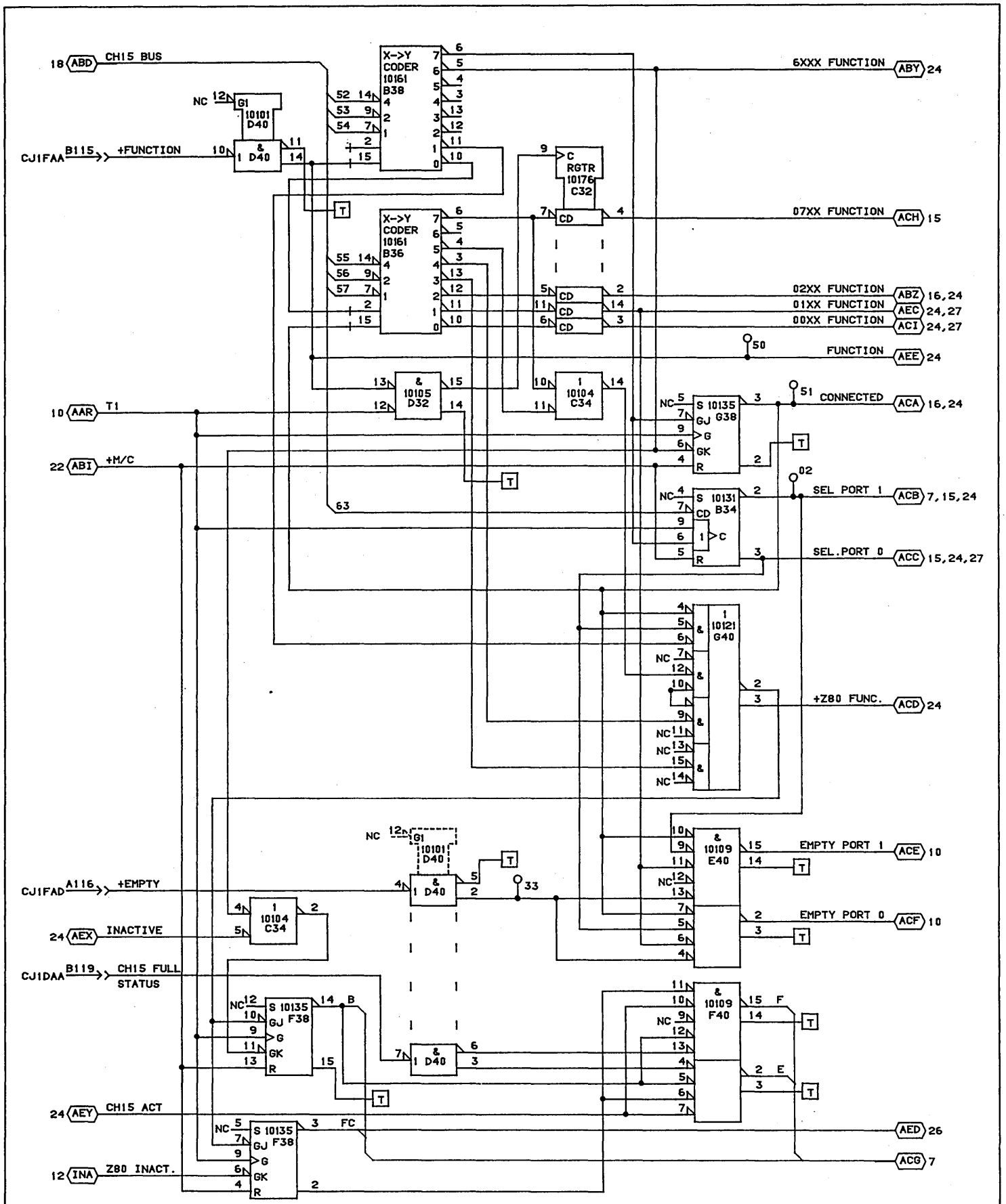

NOTE: THIS DRAWING IS APPLICABLE TO PWB 19268184 ONLY.

CONTROL DATA CANADA LTD	TWO PORT MUX FUNCTION DECODER 210 PAK ASSEMBLY TYPE: 1CK0	C		A
		23-APR-85	SHEET 17A	

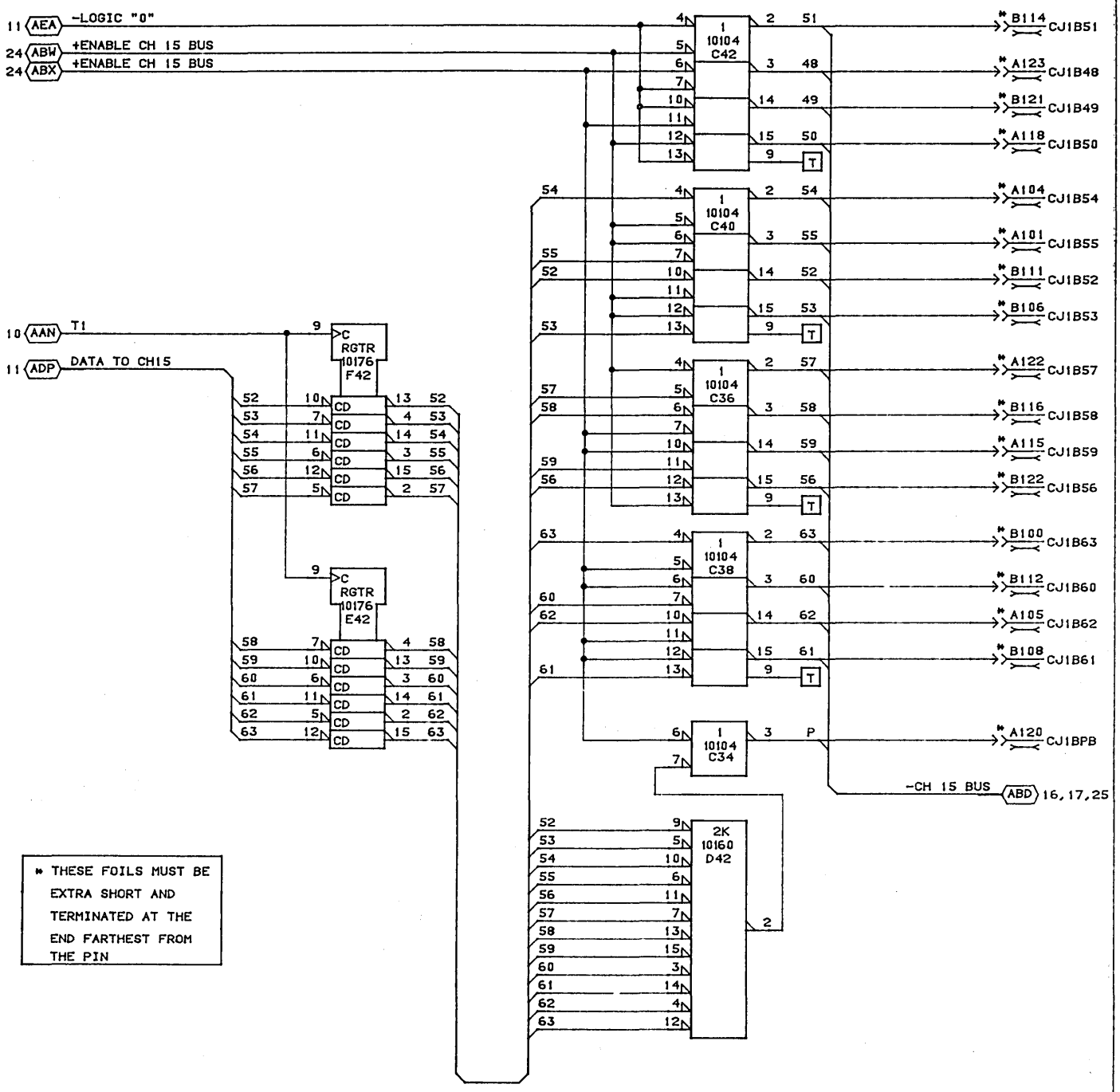

CONTROL DATA CANADA LTD	CHANNEL 15 BUS DRIVERS 210 PAK ASSEMBLY TYPE 1CK0	C		A
		19-APR-85	SHEET 18	

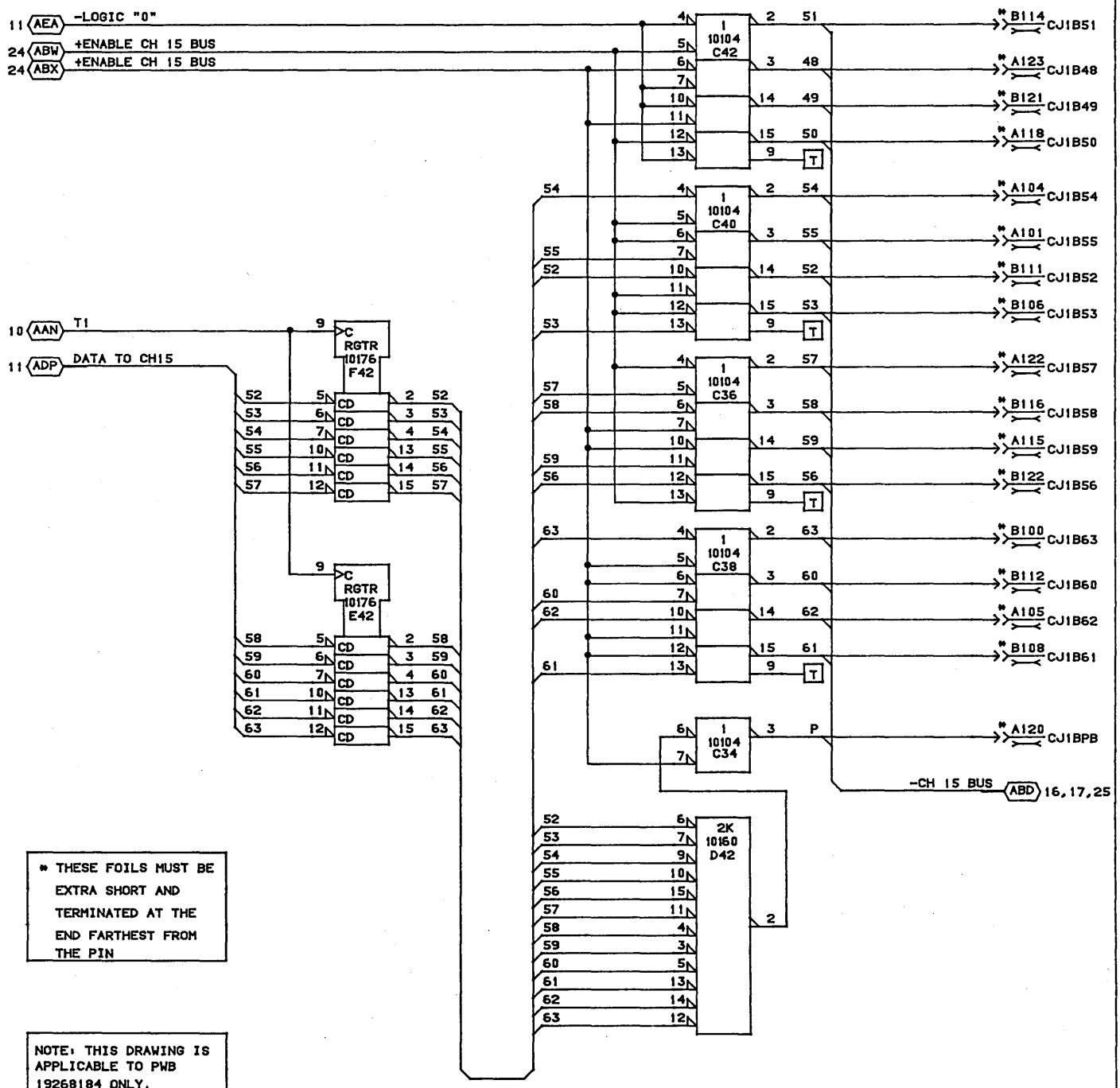

* THESE FOILS MUST BE EXTRA SHORT AND TERMINATED AT THE END FARTHEST FROM THE PIN

NOTE: THIS DRAWING IS APPLICABLE TO PWB 19268184 ONLY.

CONTROL DATA CANADA LTD	CHANNEL 15 BUS DRIVERS 210 PAK ASSEMBLY TYPE 1CK0	C		A
		23-APR-85	SHEET 18A	

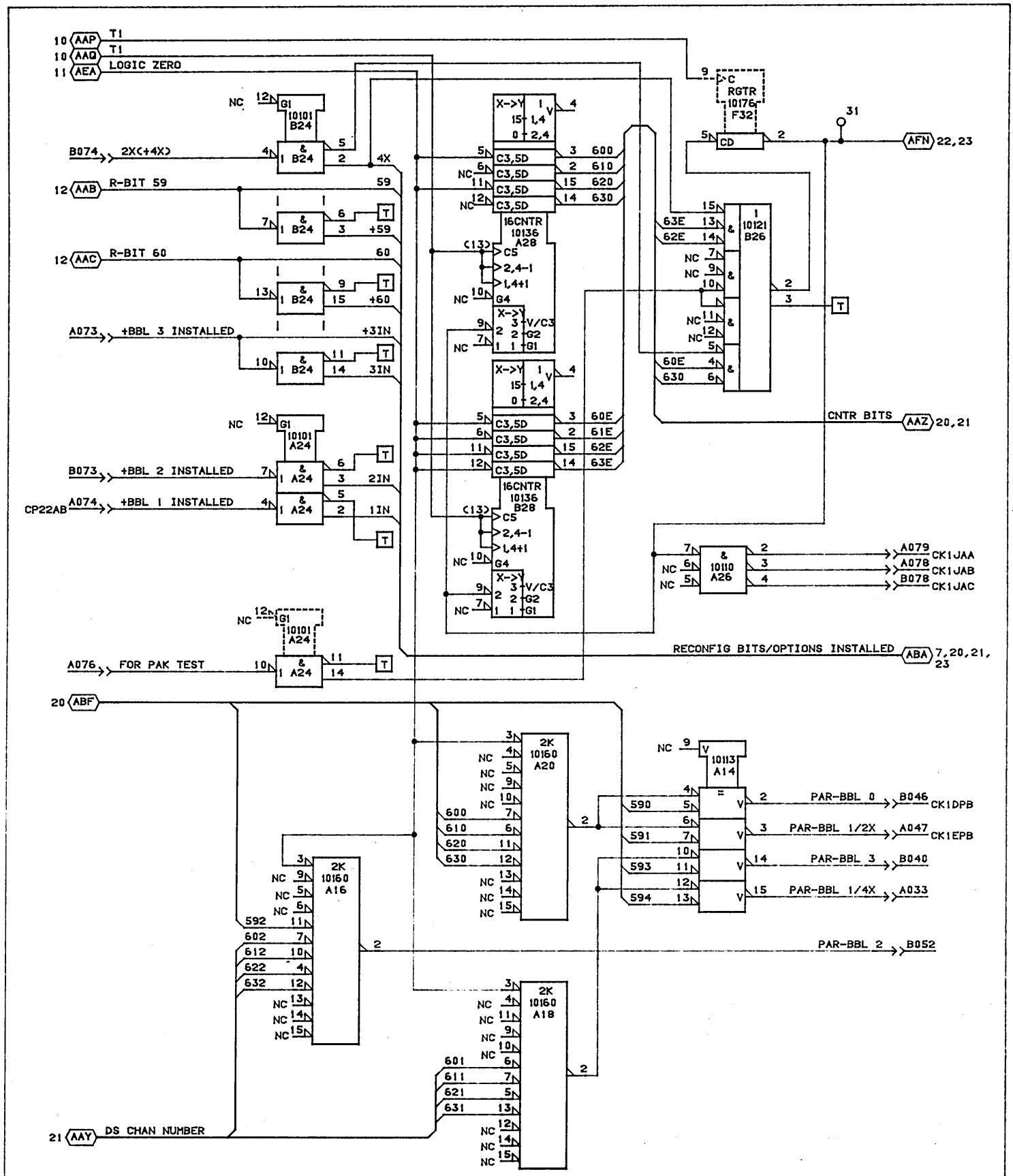

CONTROL DATA CANADA LTD	PP & DEADSTART NUMBER COUNTERS & PARITY GENERATORS 210 PAK ASSEMBLY TYPE: 1CK0	C		A
		19-APR-85	SHEET 19	

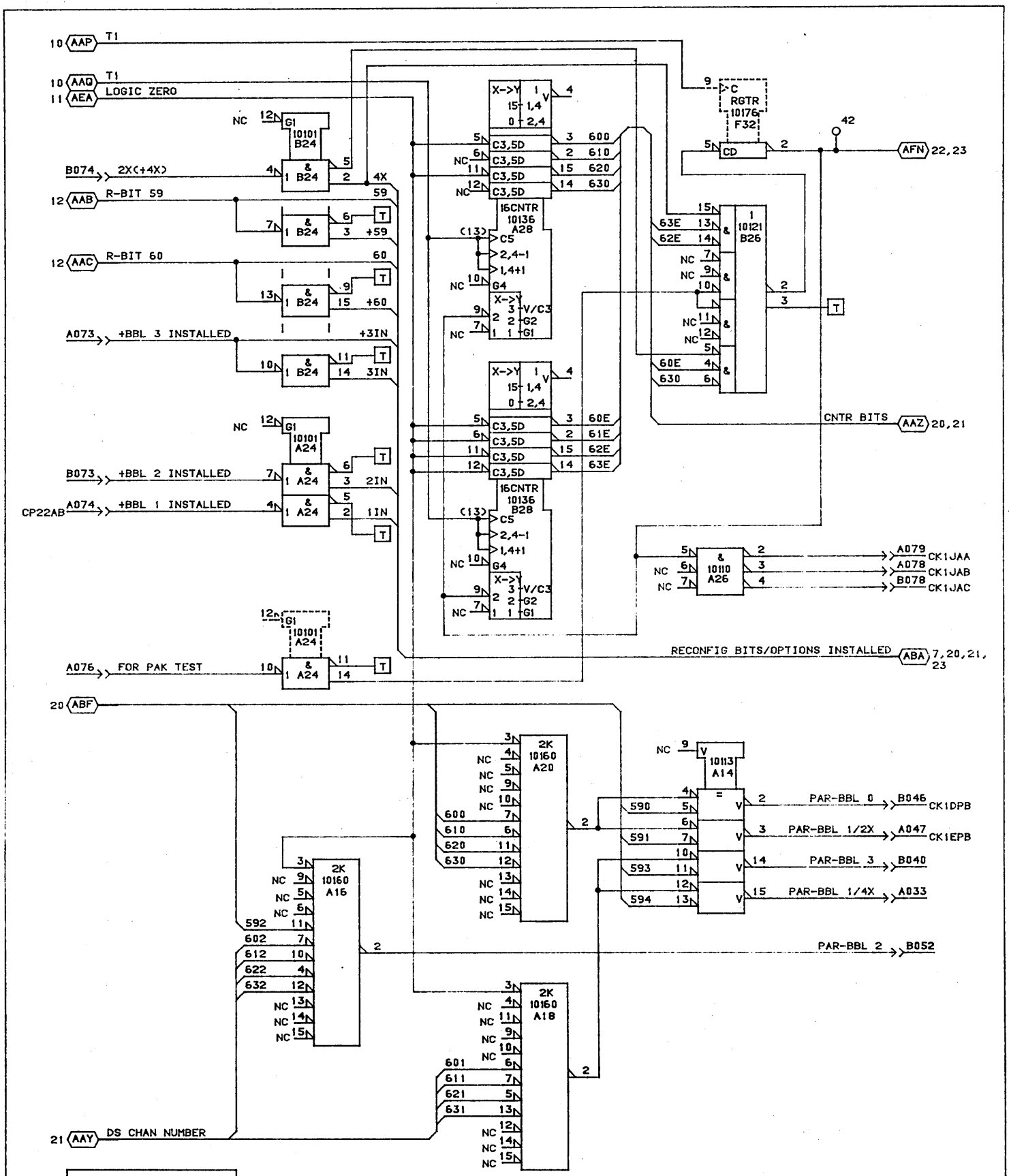

NOTE: THIS DRAWING IS APPLICABLE TO PWB 19268184 ONLY.

CONTROL DATA CANADA LTD	PP & DEADSTART NUMBER COUNTERS & PARITY GENERATORS 210 PAK ASSEMBLY TYPE: 1CK0	C		A
		23-APR-85	SHEET 19A	

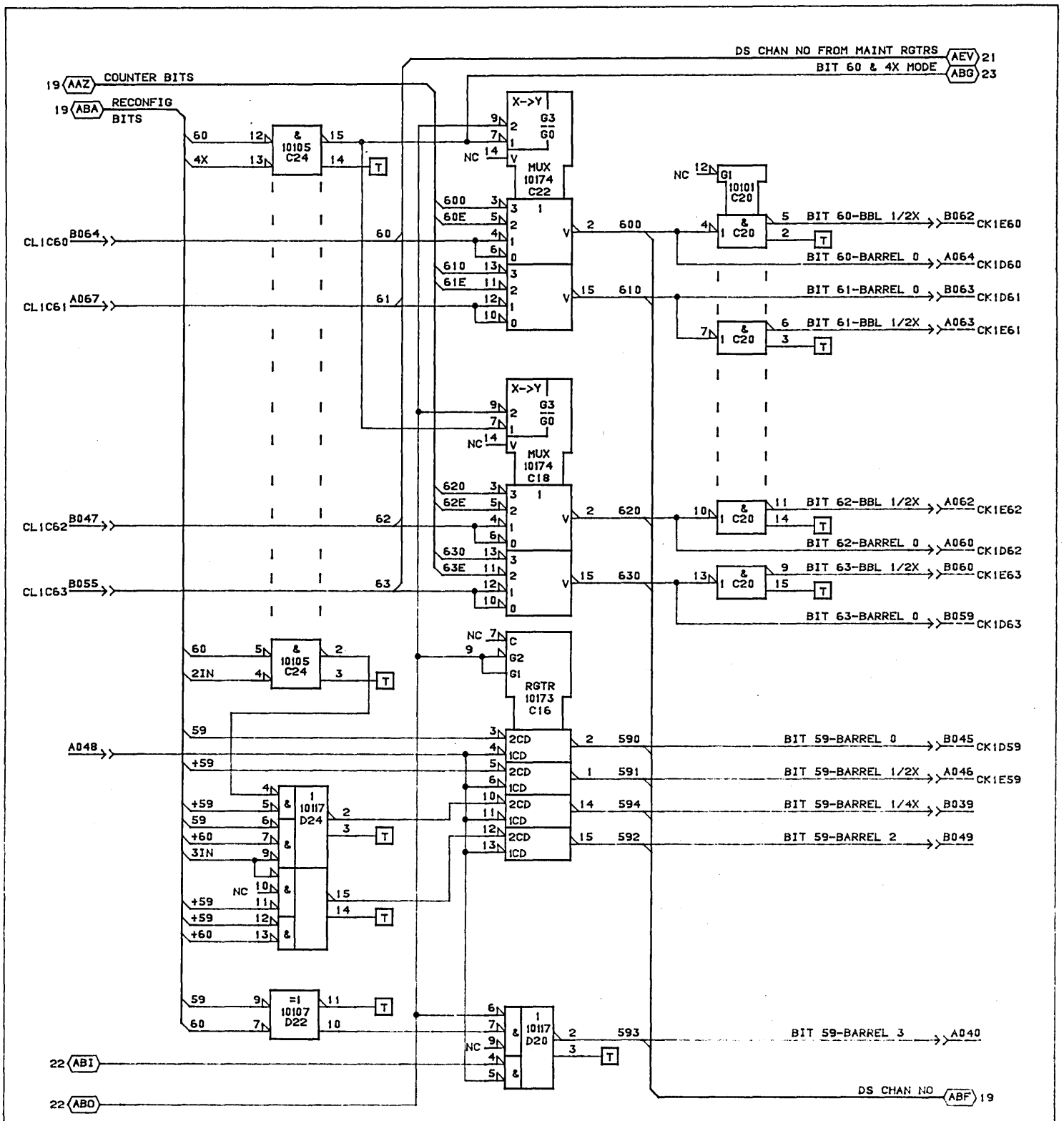

CONTROL DATA CANADA LTD	DEADSTART CHANNEL NUMBER MUX 210 PAK ASSEMBLY TYPE: 1CK0	C		A
		19-APR-85	SHEET 20	

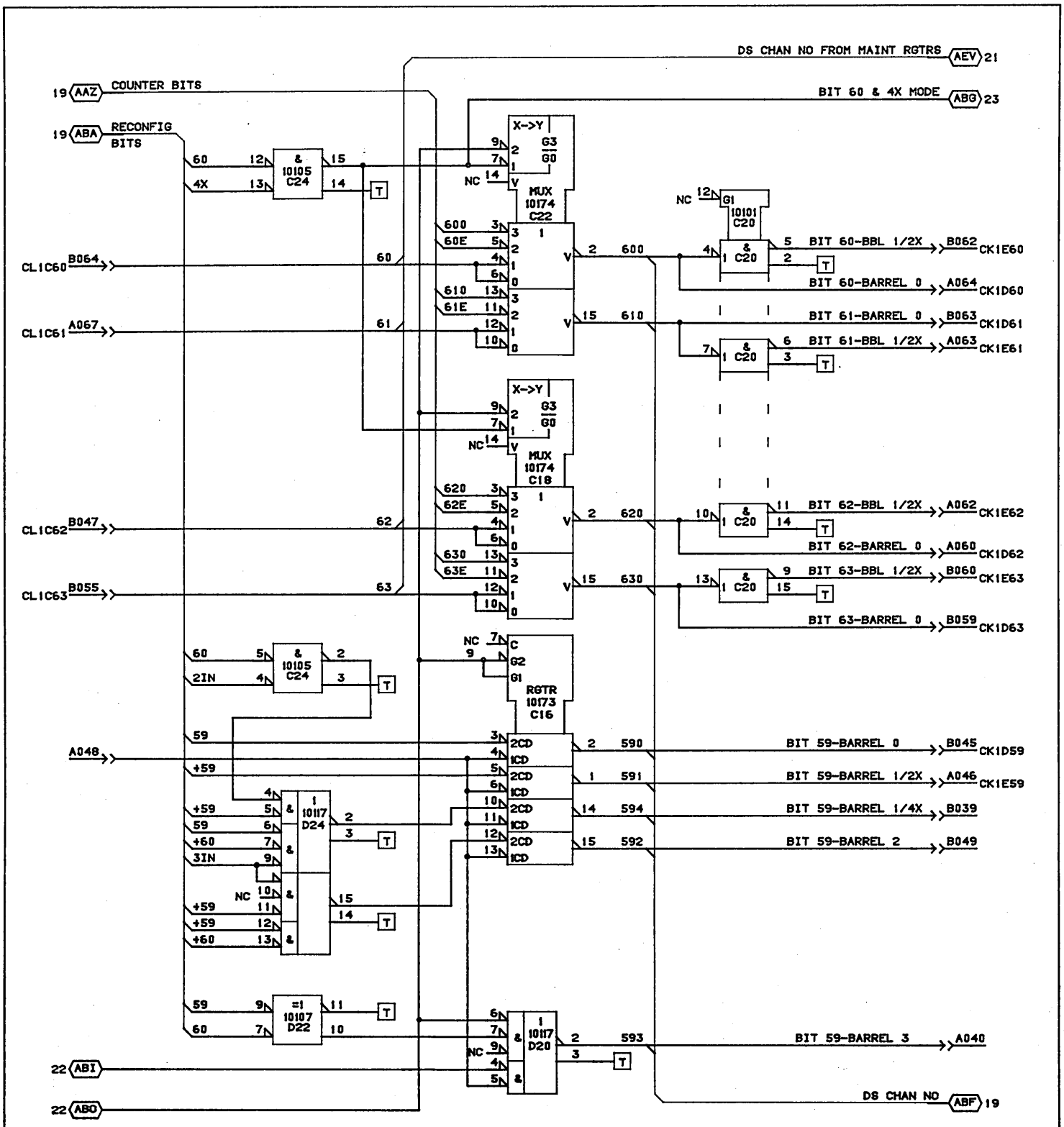

NOTE: THIS DRAWING IS APPLICABLE TO PWB 19268184 ONLY.

CONTROL DATA CANADA LTD	DEADSTART CHANNEL NUMBER MUX 210 PAK ASSEMBLY TYPE: 1CK0		C	A
		23-APR-85	SHEET 20A	

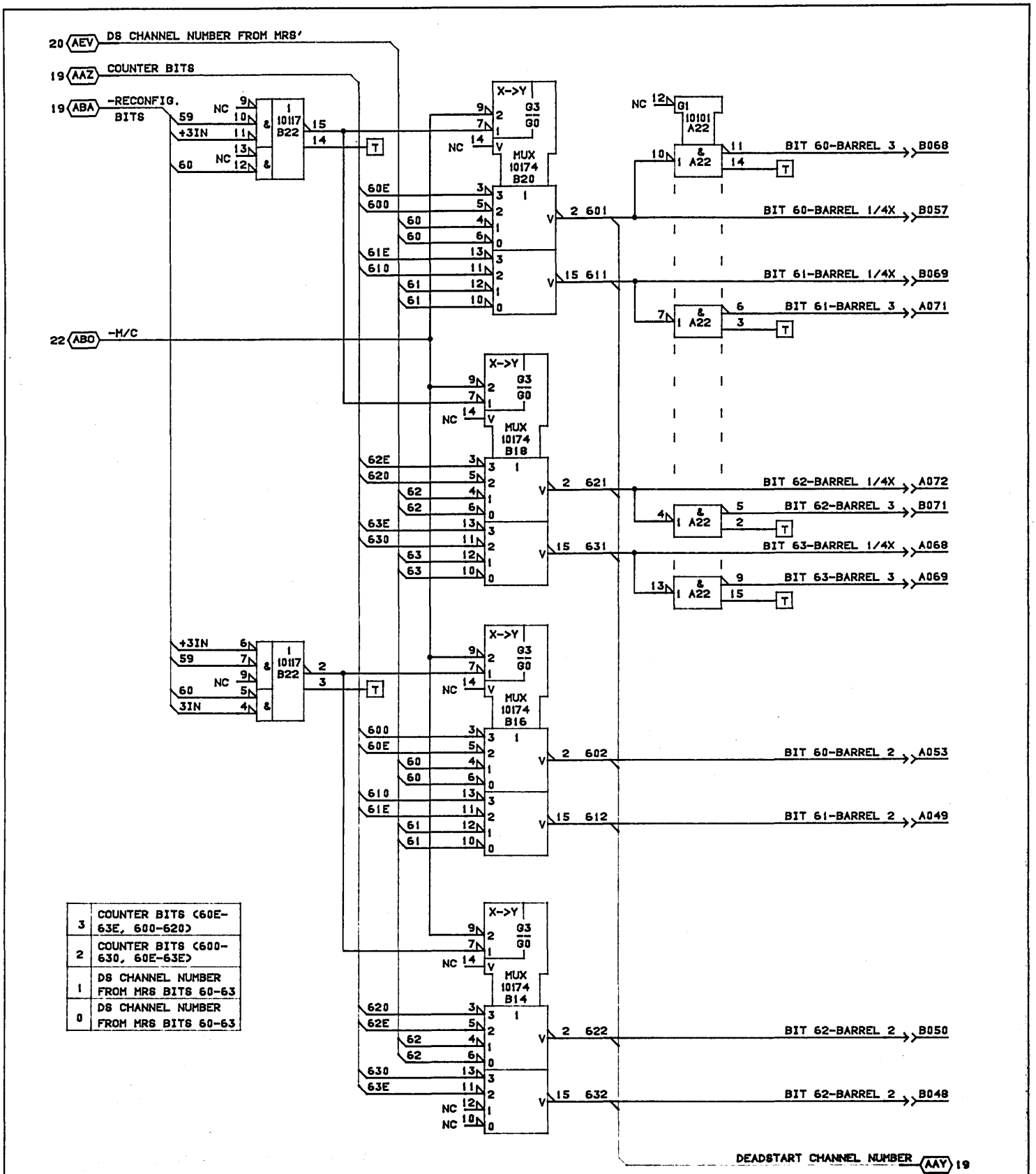

3	COUNTER BITS (60E-63E, 600-620)
2	COUNTER BITS (600-630, 60E-63E)
1	DS CHANNEL NUMBER FROM MRS BITS 60-63
0	DS CHANNEL NUMBER FROM MRS BITS 60-63

CONTROL DATA CANADA LTD	DEADSTART CHANNEL NUMBER MUX 10 PAK ASSEMBLY TYPE: 1CK0		C	A
		19-APR-85	SHEET 21	

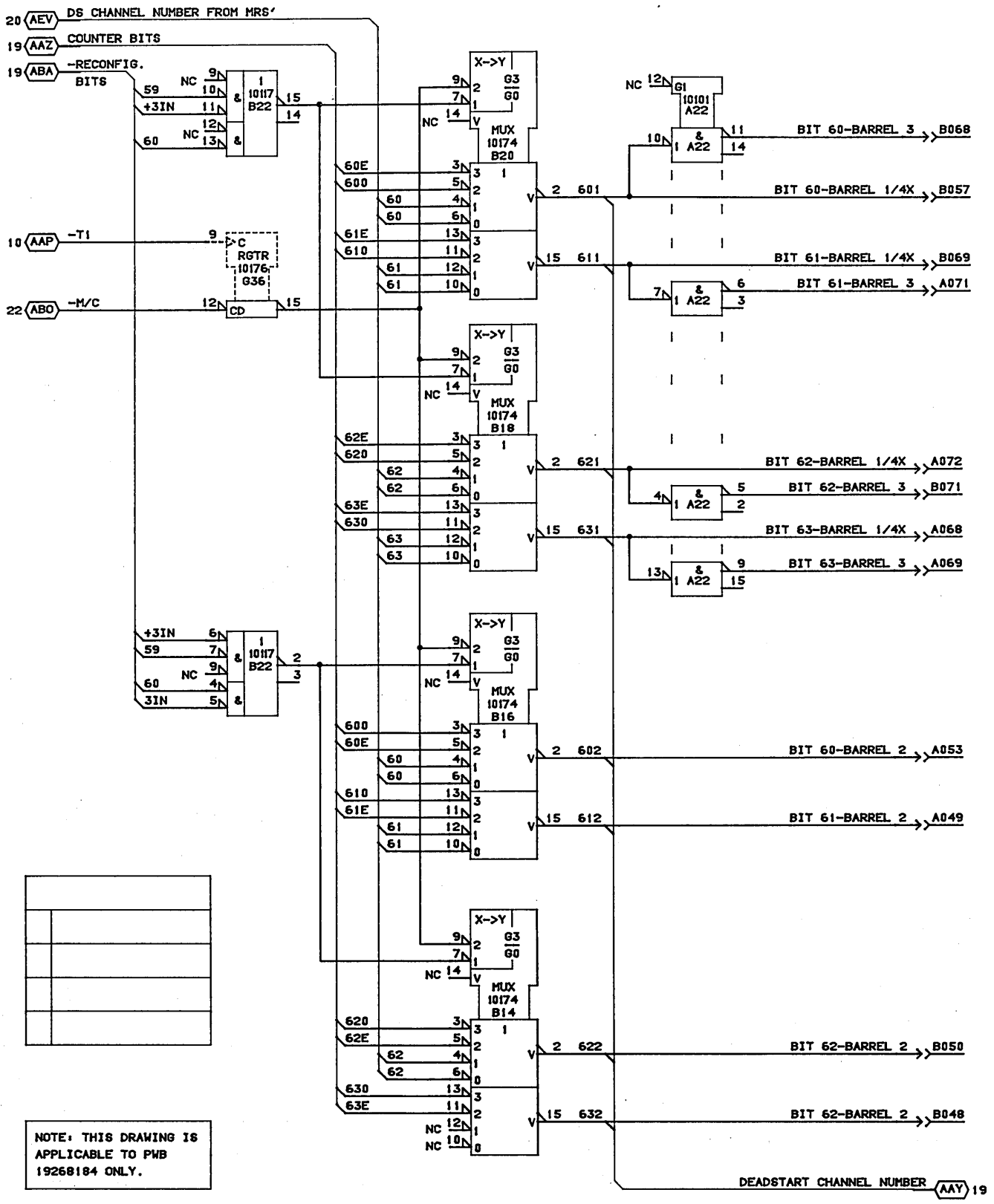

NOTE: THIS DRAWING IS APPLICABLE TO PWB 19268184 ONLY.

CONTROL DATA CANADA LTD	DEADSTART CHANNEL NUMBER MUX 10 PAK ASSEMBLY TYPE: 1CK0		C	A
		23-APR-85	SHEET 21A	

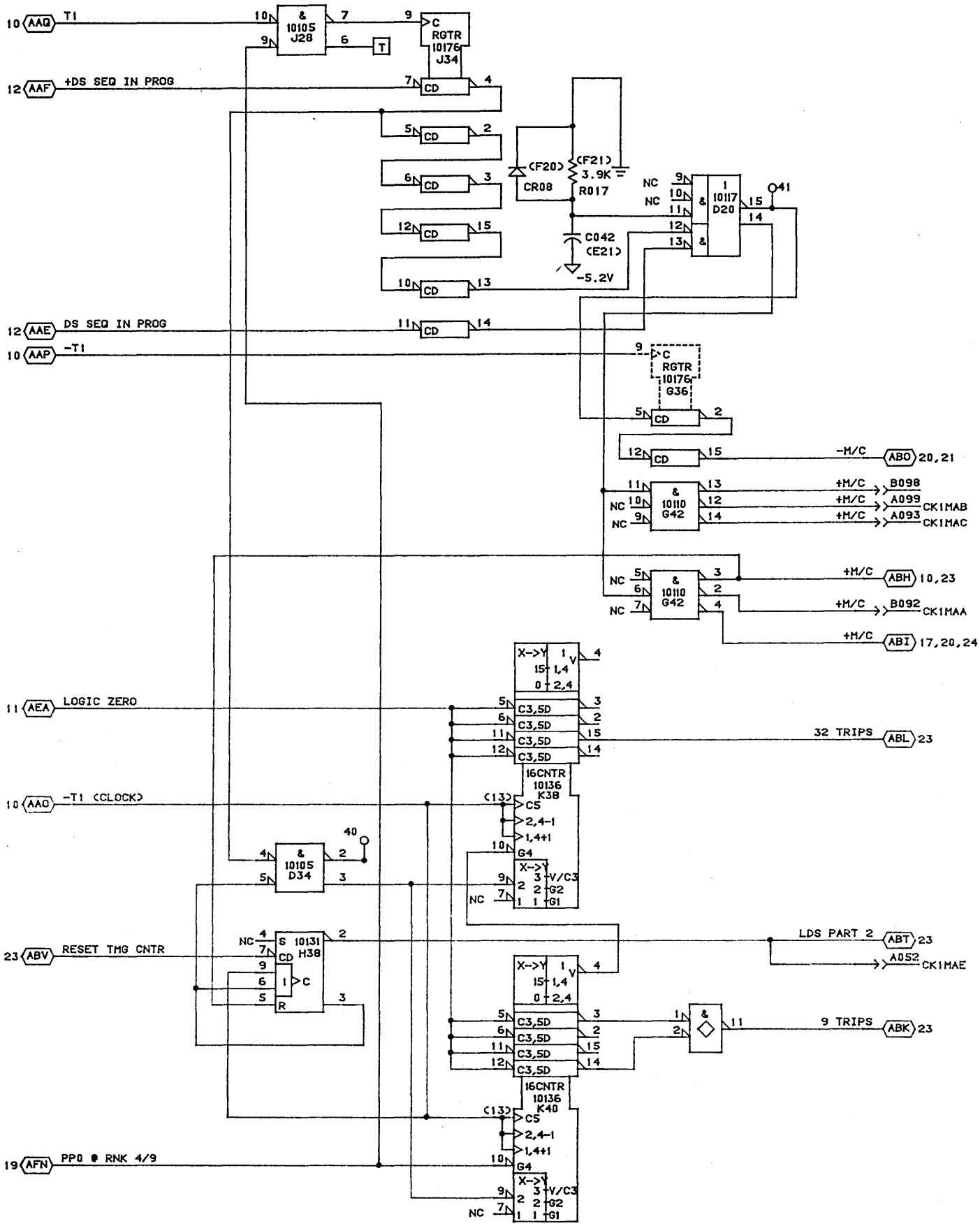

CONTROL DATA CANADA LTD	MASTER CLEAR GENERATOR BRANCH TEST TIMEOUT COUNTER 210 PAK ASSEMBLY TYPE: 1CK0	C		A
		24-APR-85	SHEET 22	

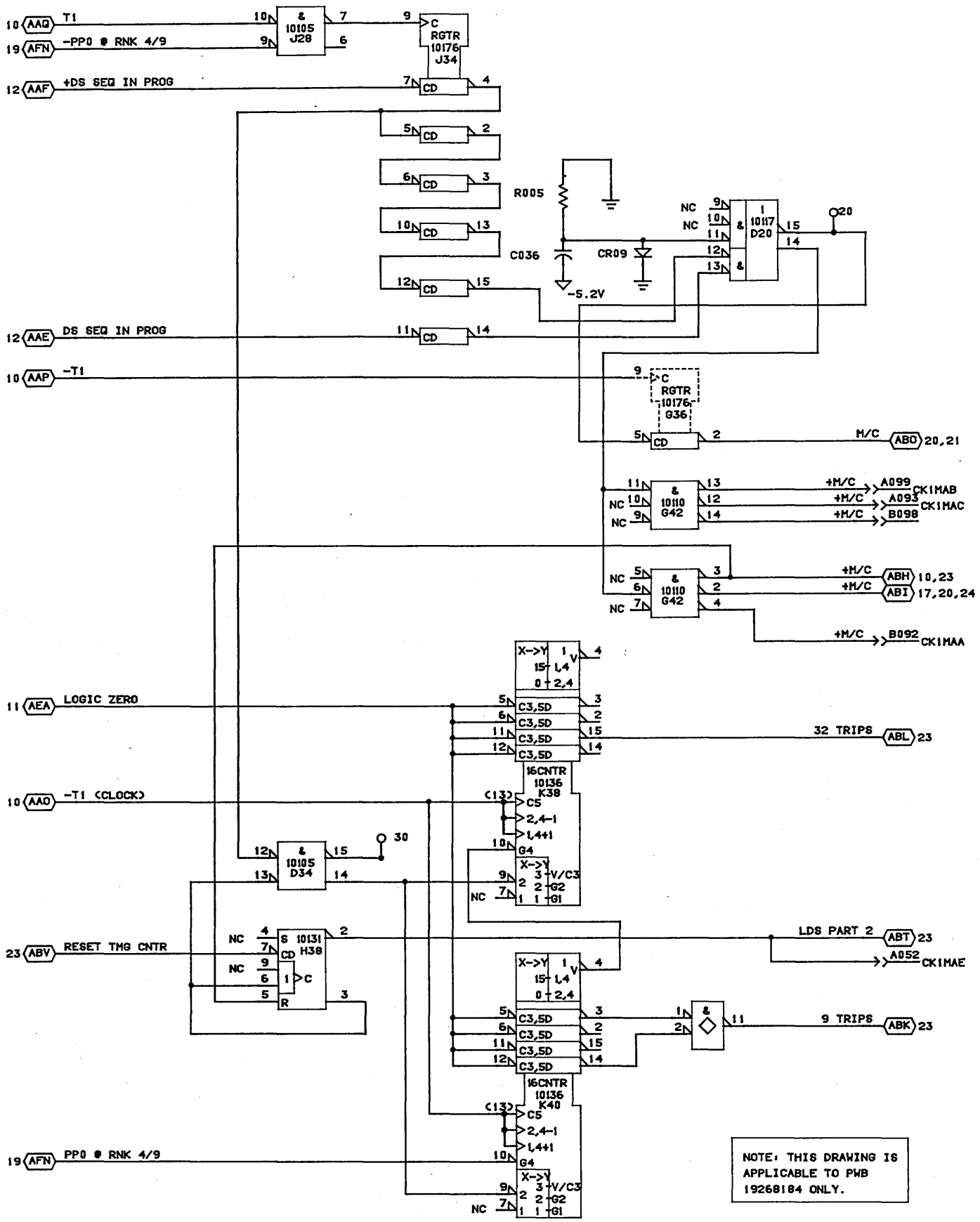

NOTE: THIS DRAWING IS APPLICABLE TO PWB 19268184 ONLY.

CONTROL DATA CANADA LTD	MASTER CLEAR GENERATOR BRANCH TEST TIMEOUT COUNTER 210 PAK ASSEMBLY TYPE: 1CK0	C		A
		23-APR-85	SHEET 22A	

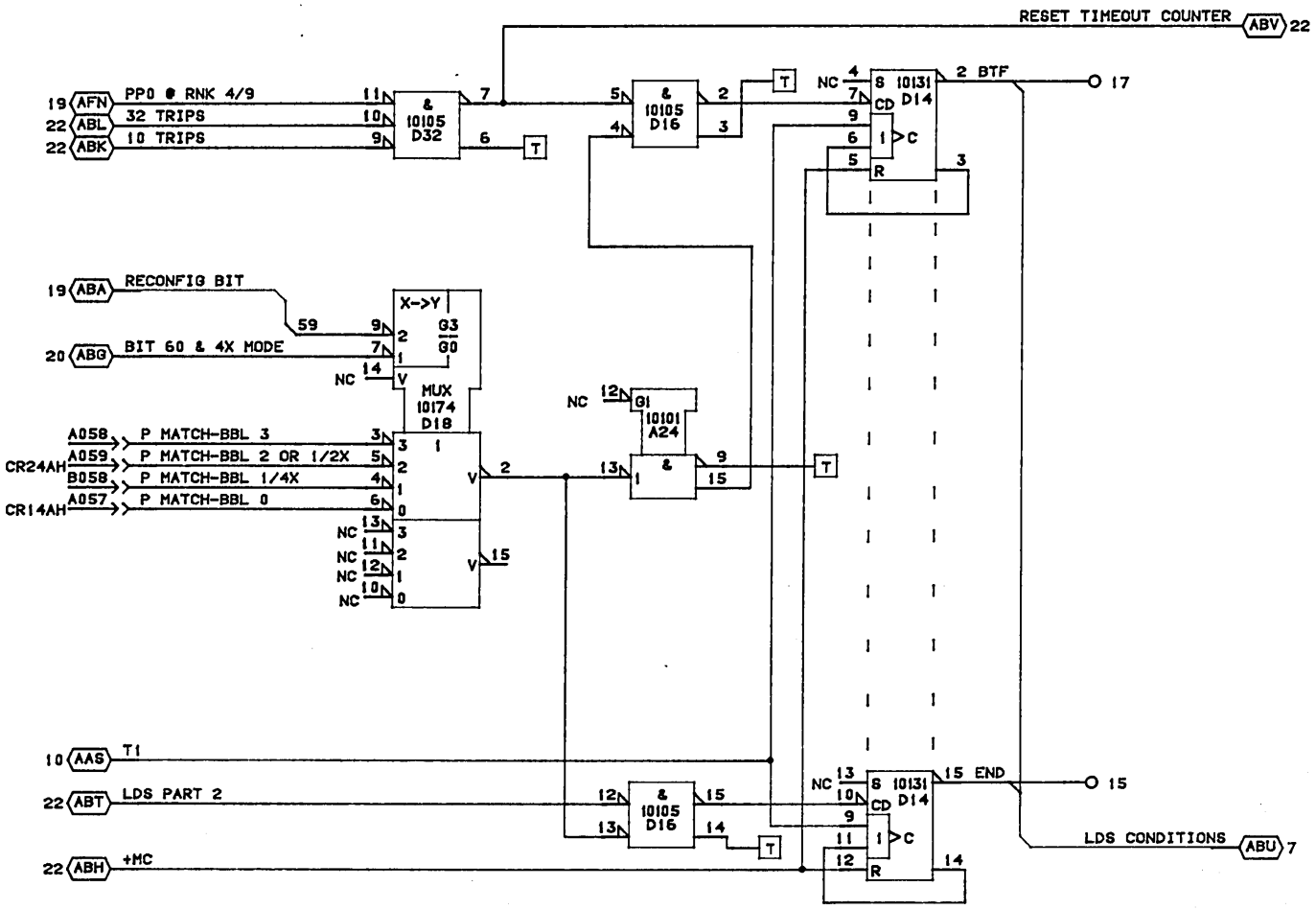

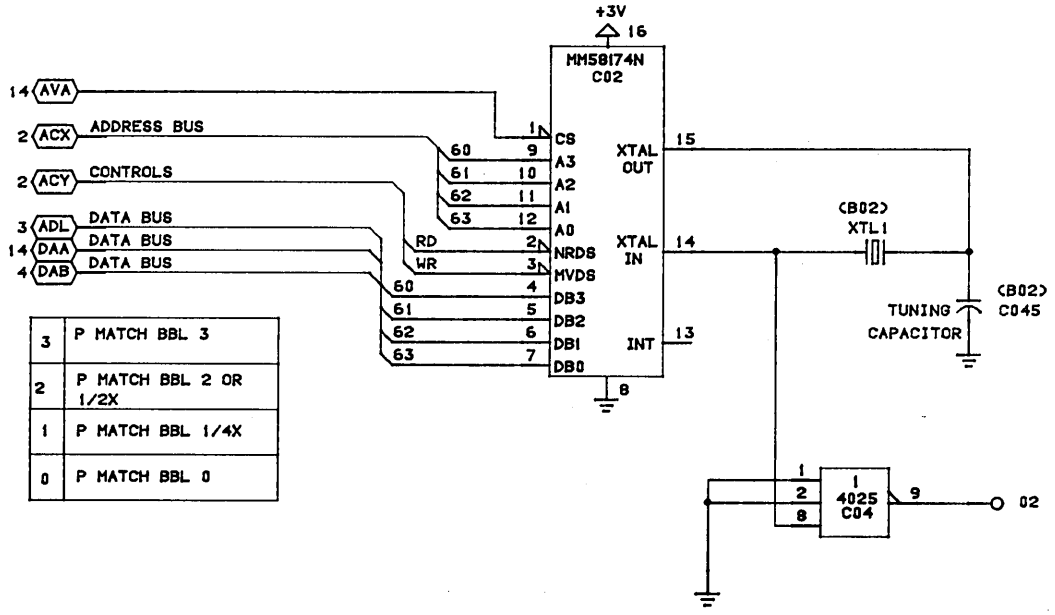

3	P MATCH BBL 3
2	P MATCH BBL 2 OR 1/2X
1	P MATCH BBL 1/4X
0	P MATCH BBL 0

CONTROL DATA CANADA LTD	DEADSTART CONTROLS FANOUT 210 PAK ASSEMBLY TYPE: 1CK0	C	A
		19-APR-85	SHEET 23

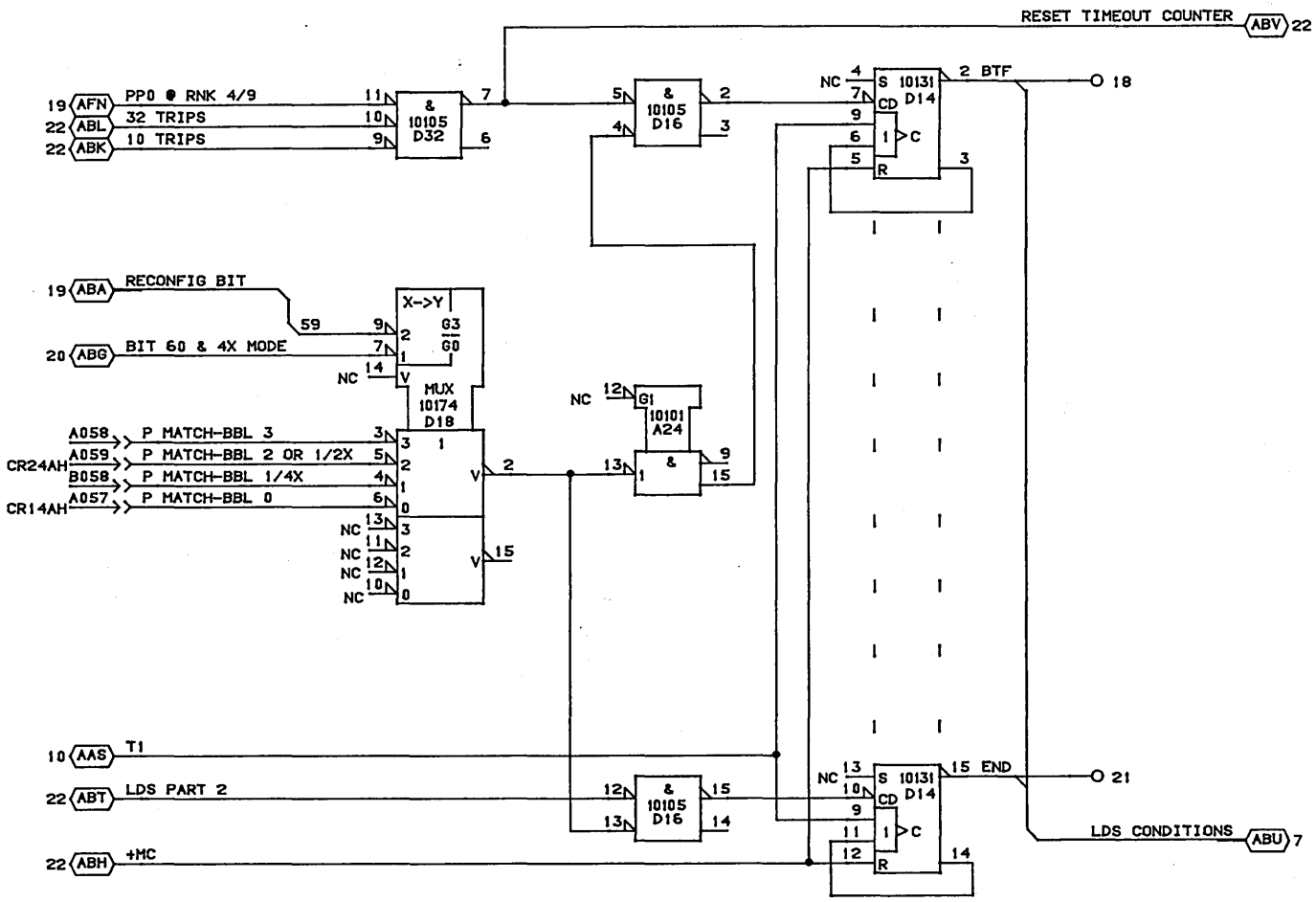

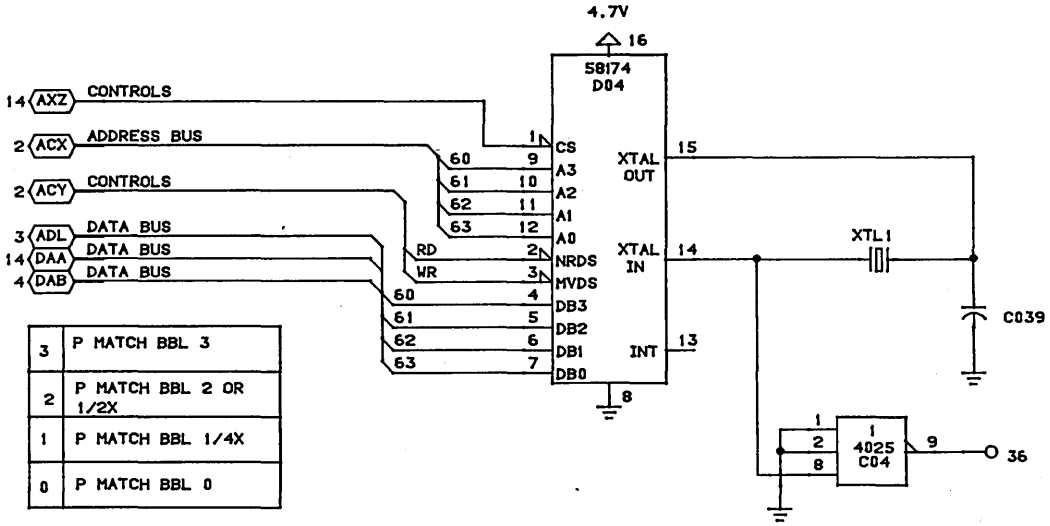

3	P MATCH BBL 3
2	P MATCH BBL 2 OR 1/2X
1	P MATCH BBL 1/4X
0	P MATCH BBL 0

NOTE: THIS DRAWING IS APPLICABLE TO PWB 19268184 ONLY.

CONTROL DATA CANADA LTD	DEADSTART CONTROLS FANOUT 210 PAK ASSEMBLY TYPE: 1CK0	C		A
		23-APR-85	SHEET 23A	

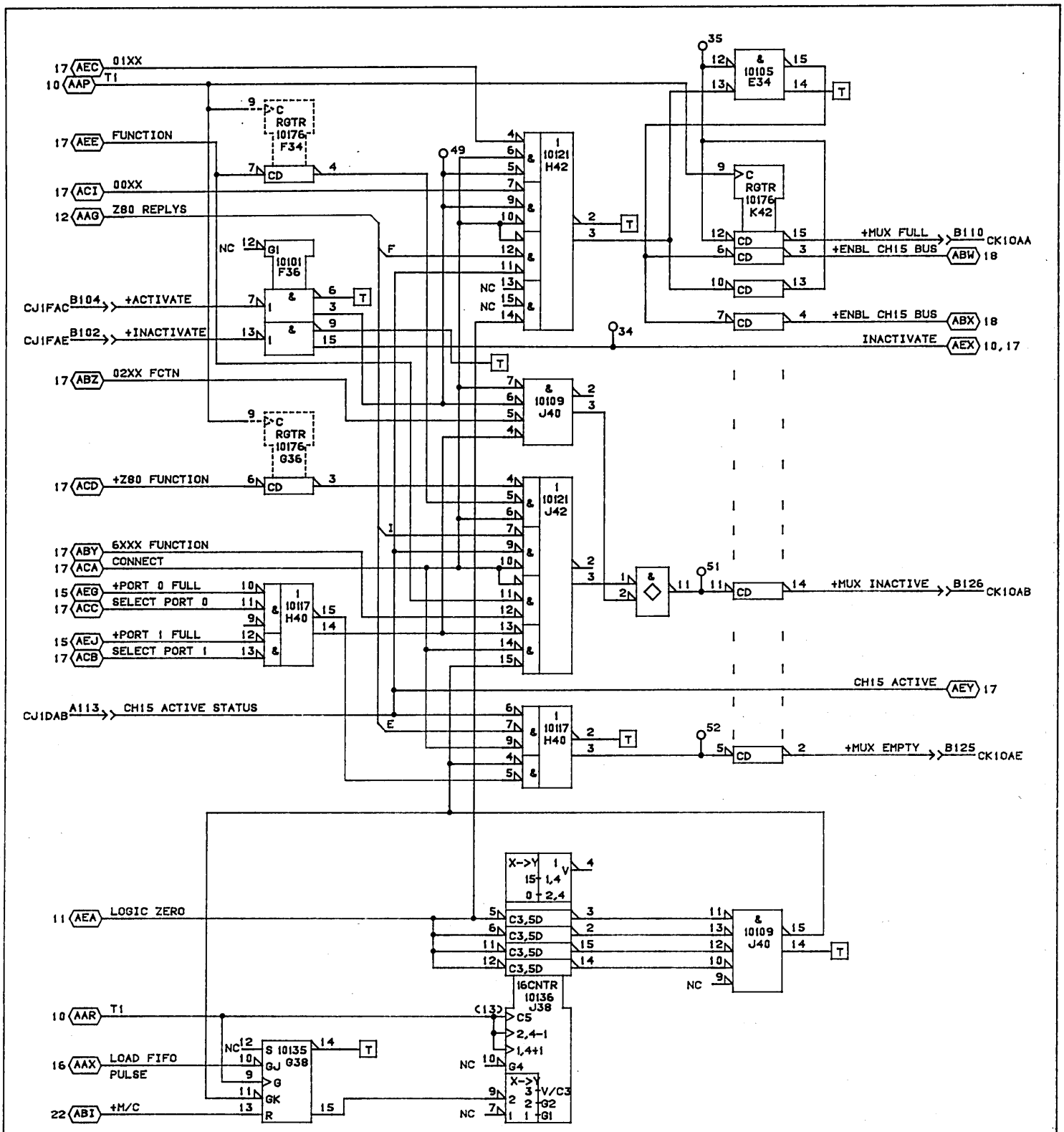

CONTROL DATA CANADA LTD	TWO PORT MUX OUTPUT CONTROLS 210 PAK ASSEMBLY TYPE: 1CK0	C		A
		19-APR-85	SHEET 24	

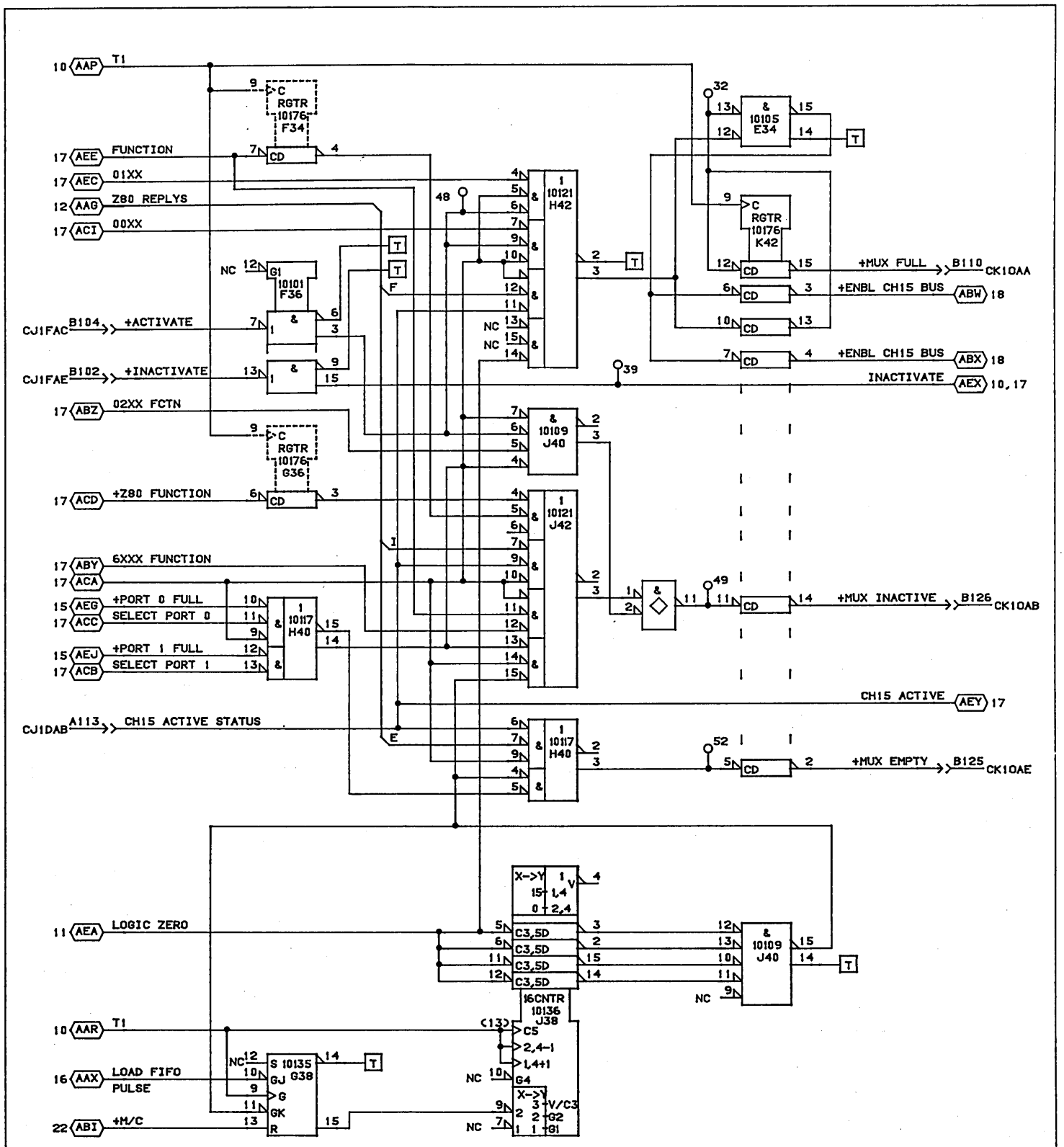

NOTE: THIS DRAWING IS APPLICABLE TO PWB 19268184 ONLY.

CONTROL DATA CANADA LTD	TWO PORT MUX OUTPUT CONTROLS 210 PAK ASSEMBLY TYPE: 1CK0	C		A
		23-APR-85	SHEET 24A	

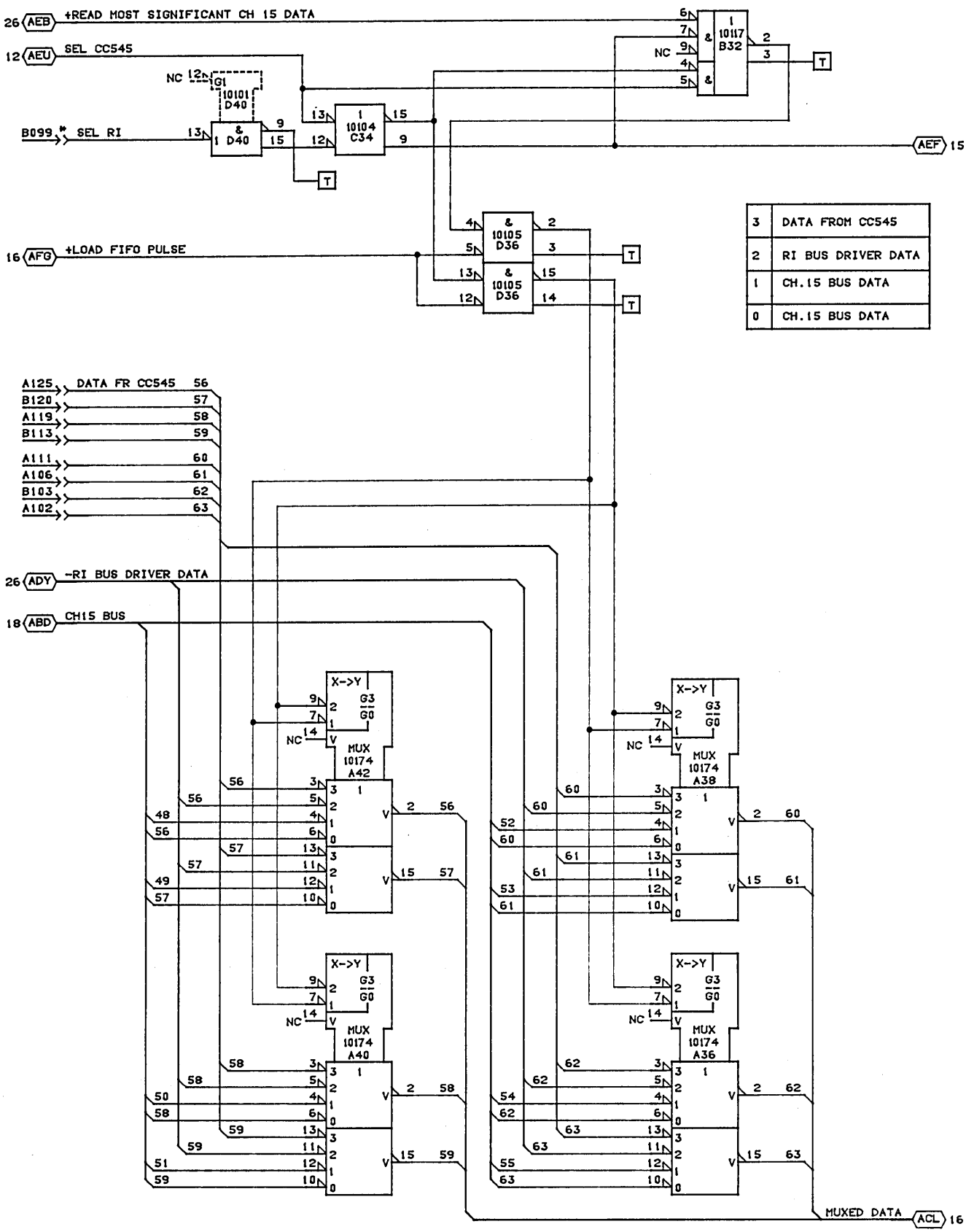

3	DATA FROM CC545
2	RI BUS DRIVER DATA
1	CH.15 BUS DATA
0	CH.15 BUS DATA

* SHORT AND DO NOT TERMINATE.

CONTROL DATA CANADA LTD	DISPLAY CONTROLLER RADIAL INTERFACE, INTERFACES 210 PAK ASSEMBLY TYPE: 1CK0	C	A
		19-APR-85	SHEET 25

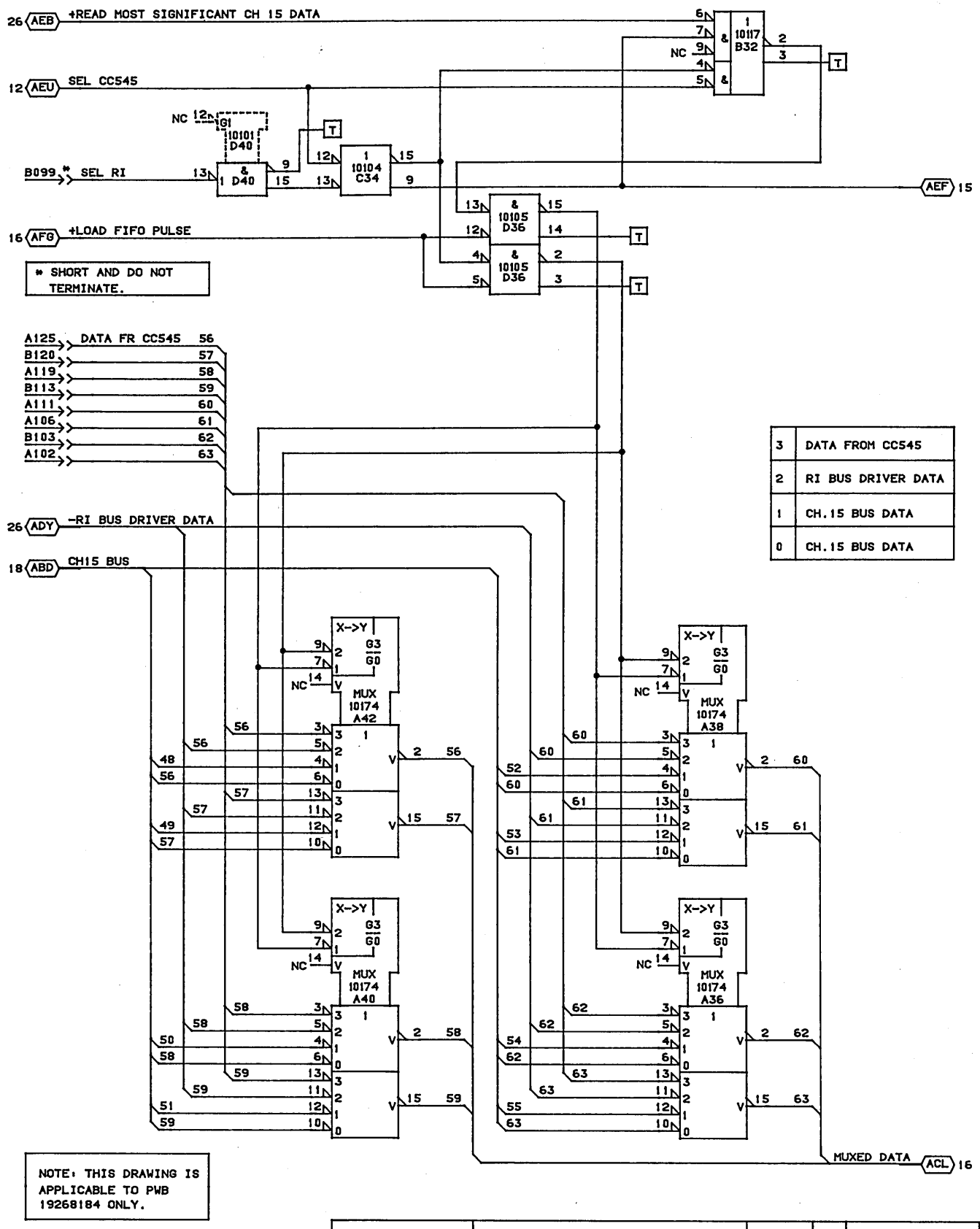

3	DATA FROM CC545
2	RI BUS DRIVER DATA
1	CH.15 BUS DATA
0	CH.15 BUS DATA

CONTROL DATA CANADA LTD	DISPLAY CONTROLLER RADIAL INTERFACE, INTERFACES 210 PAK ASSEMBLY TYPE: 1CK0		C	A
		23-APR-85	SHEET 25A	

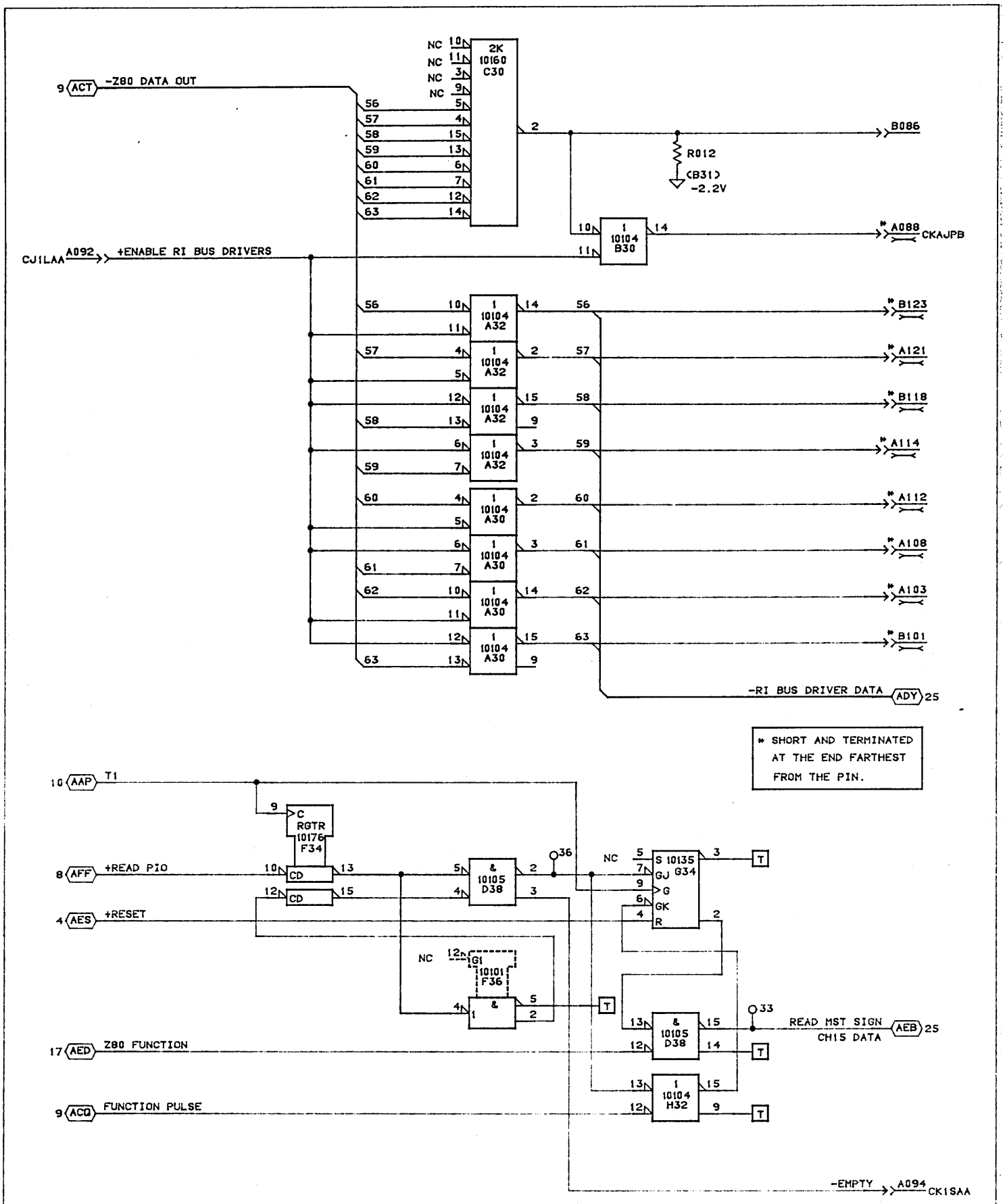

CONTROL DATA CANADA LTD	RADIAL INTERFACE BUS DRIVERS 210 PAK ASSEMBLY TYPE: 1CK0	C		A
		19-APR-85	SHEET 26	

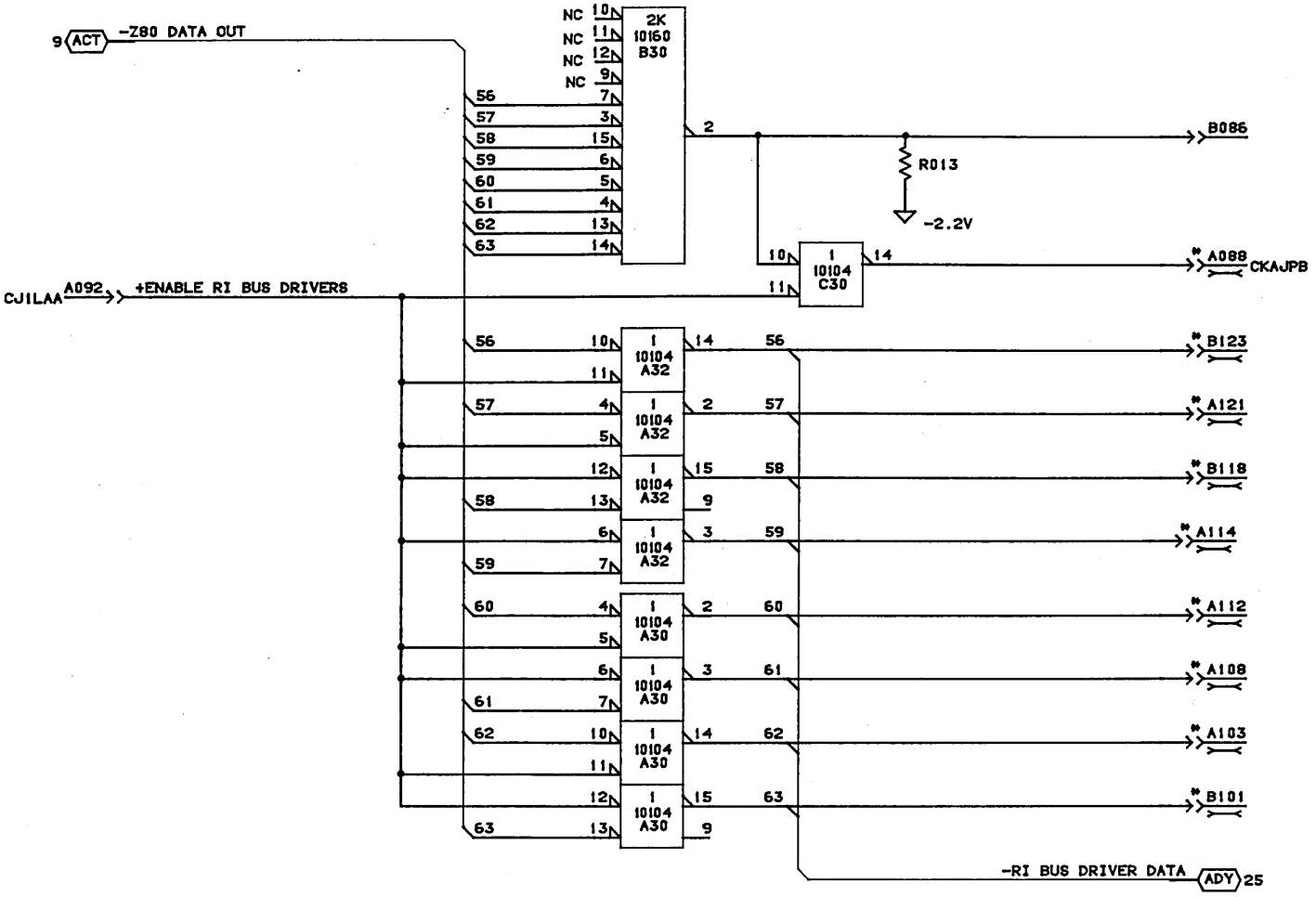

* SHORT AND TERMINATED AT THE END FARTHEST FROM THE PIN.

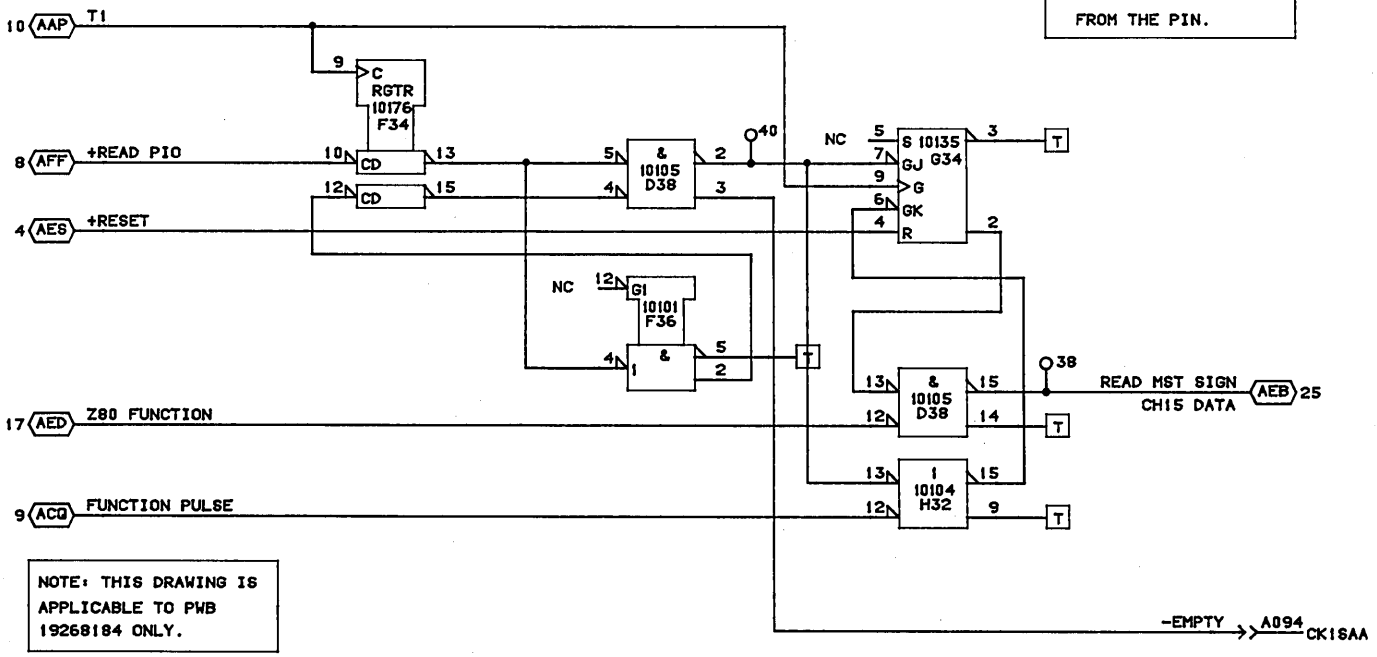

NOTE: THIS DRAWING IS APPLICABLE TO PWB 19268184 ONLY.

CONTROL DATA CANADA LTD	RADIAL INTERFACE BUS DRIVERS 210 PAK ASSEMBLY TYPE: 1CK0	C		A
		23-APR-85	SHEET 26A	

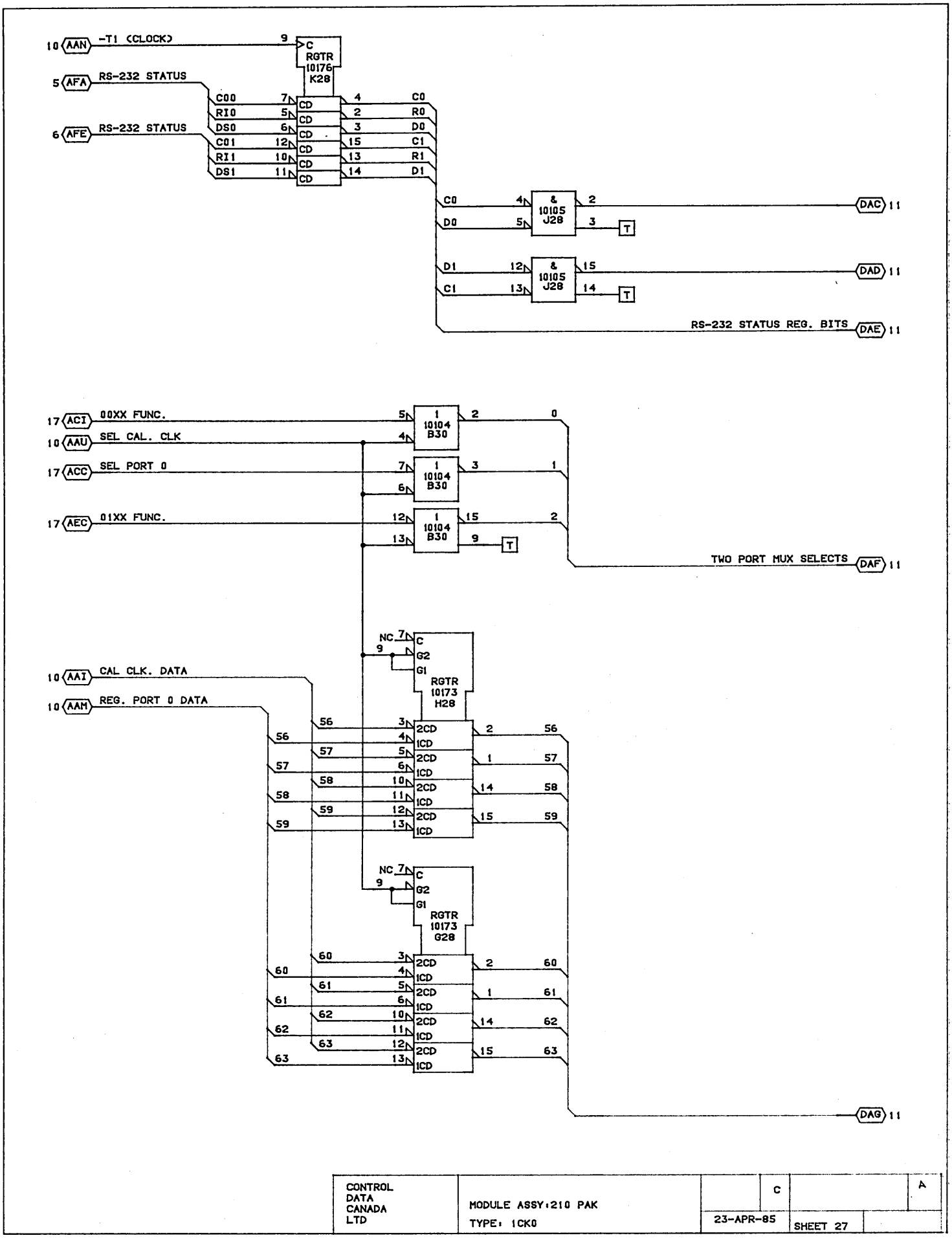

CONTROL DATA CANADA LTD	MODULE ASSY:210 PAK TYPE: 1CK0	C		A
		23-APR-85	SHEET 27	

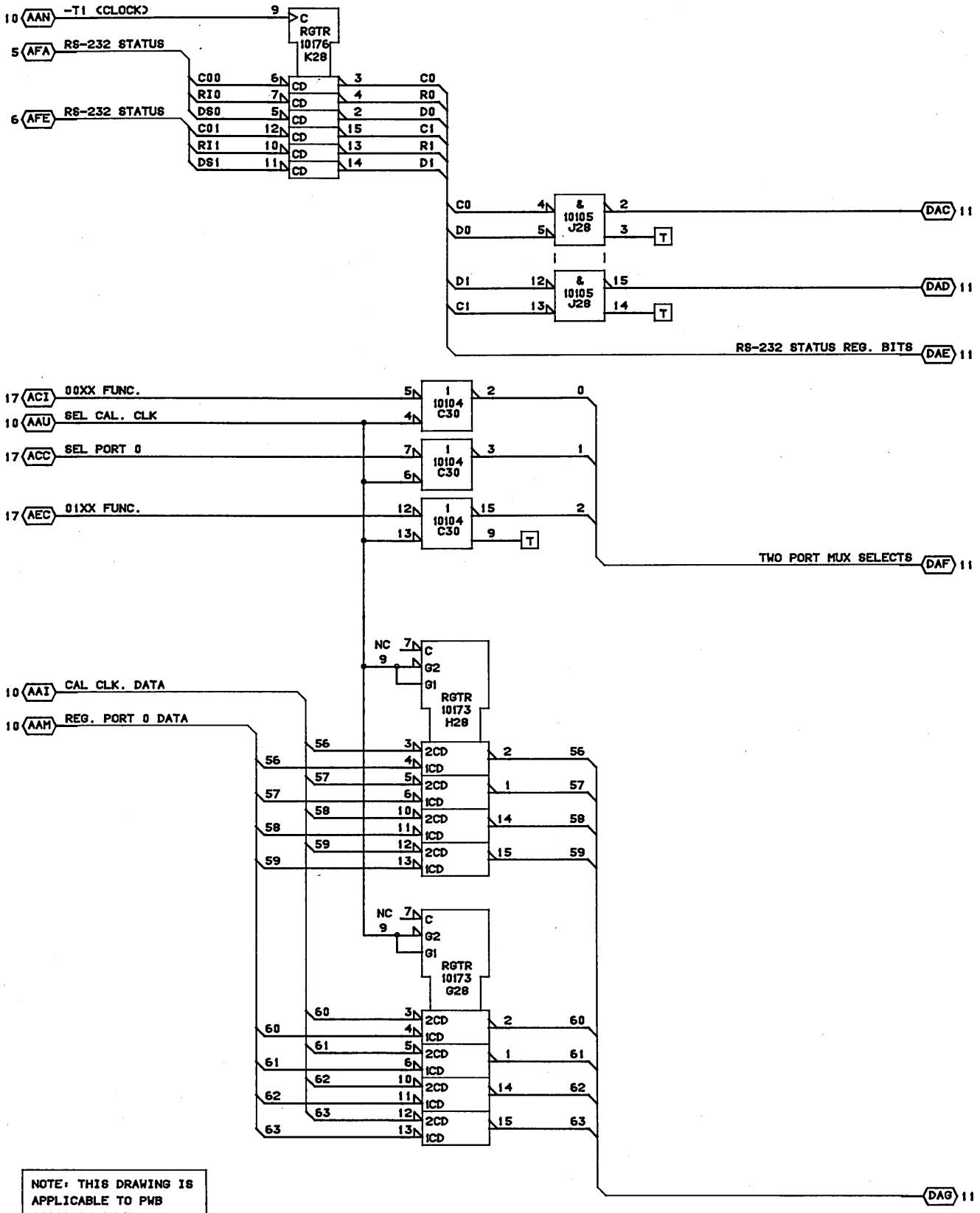

NOTE: THIS DRAWING IS APPLICABLE TO PWB 19268184 ONLY.

CONTROL DATA CANADA LTD	MODULE ASSY:210 PAK TYPE: 1CK0	C		A
		23-APR-85	SHEET 27A	

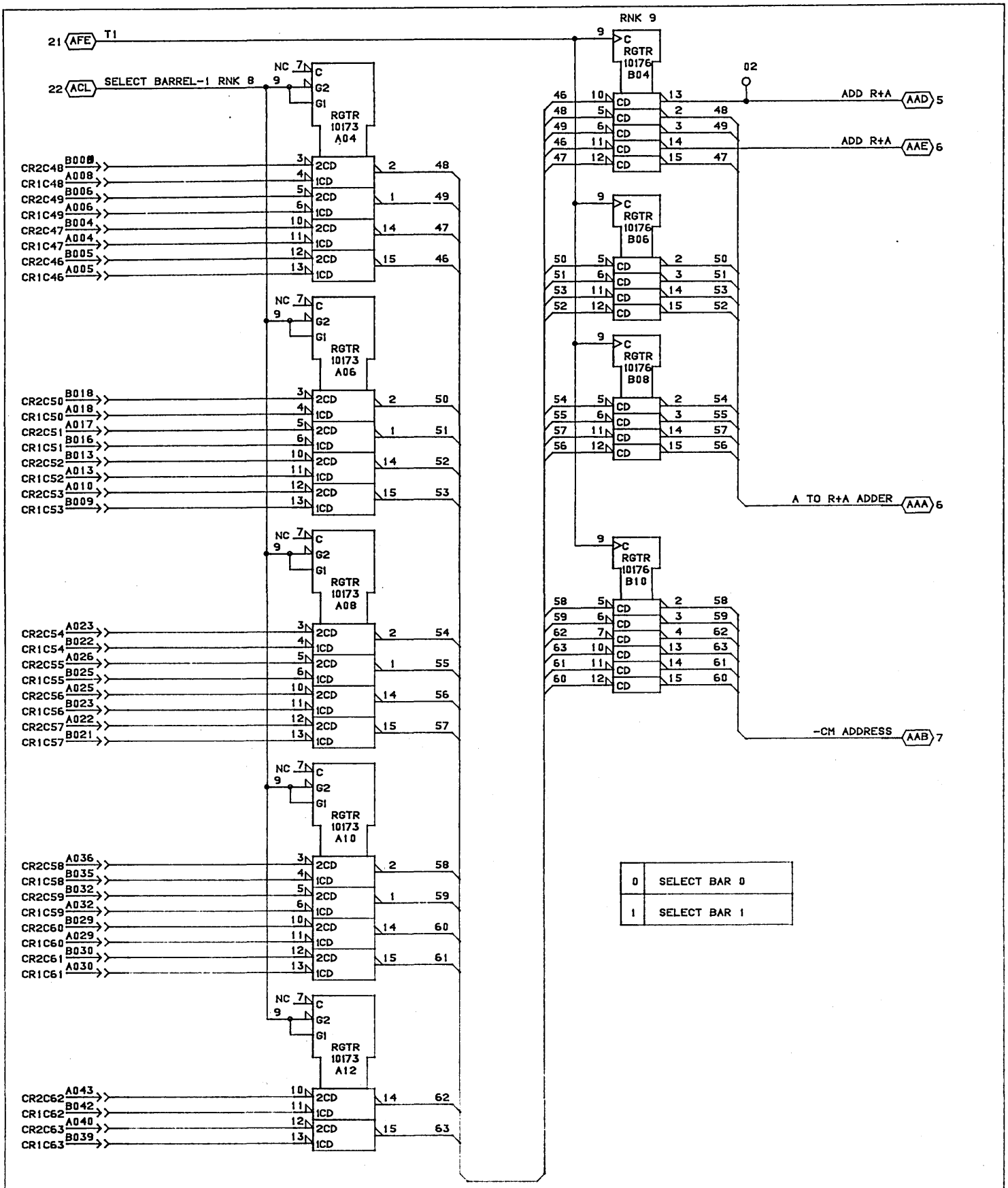

CONTROL DATA CANADA LTD	A BARREL SELECTION 210 PAK ASSEMBLY TYPE: 1CL0	C		A
		11-APR-85	SHEET 02	

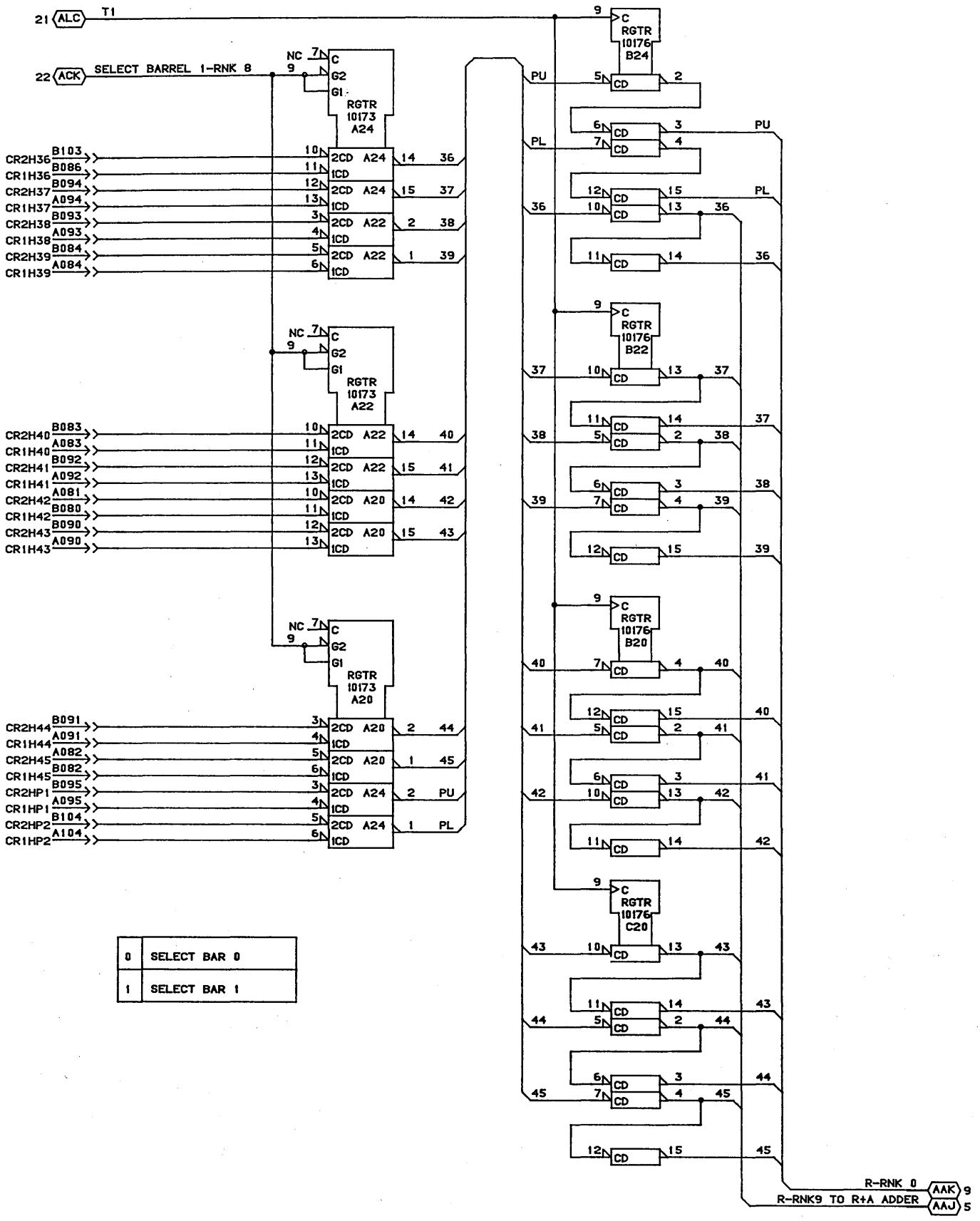

0	SELECT BAR 0
1	SELECT BAR 1

CONTROL DATA CANADA LTD	R BARREL SELECTION BITS 36-45 210 PAK ASSEMBLY TYPE: 1CL0	C		A
		14-JAN-85	SHEET 03	LOC. D06

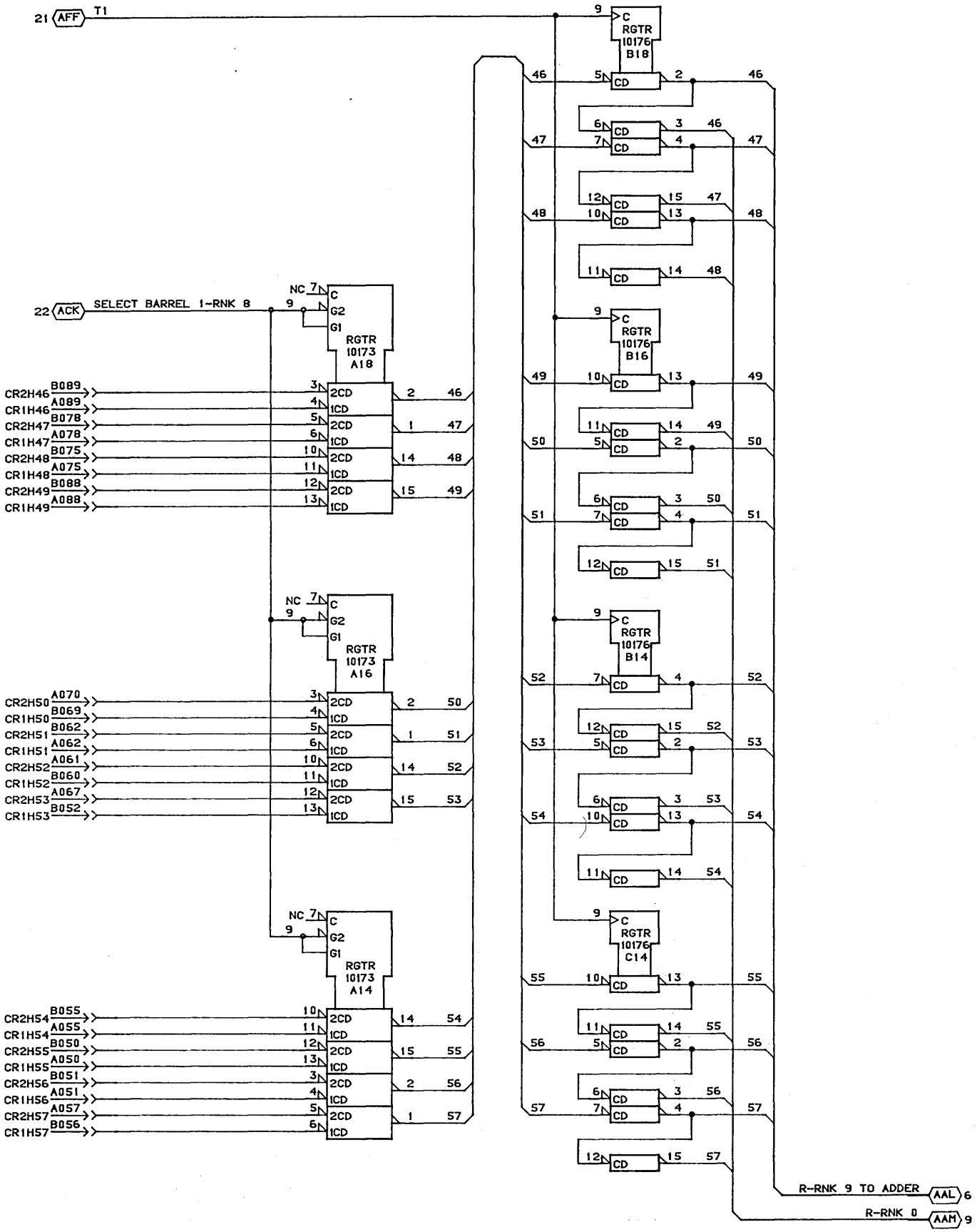

CONTROL DATA CANADA LTD	R BARREL SELECTION BITS 46-57 210 PAK ASSEMBLY TYPE: 1CL0	C		A
		14-JAN-85	SHEET 04	LOC. D06

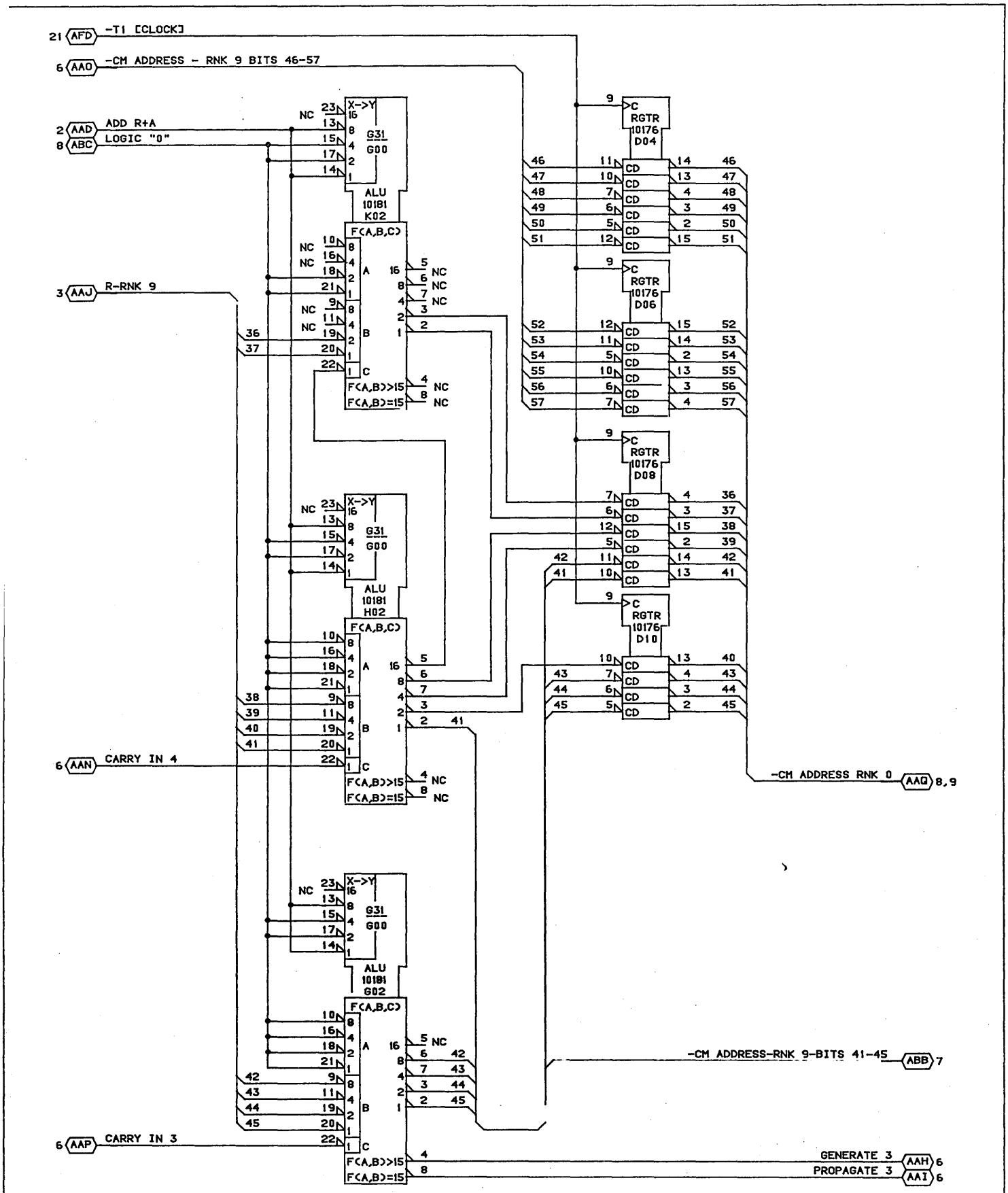

CONTROL DATA CANADA LTD	R+A ADDER BITS 36-45 210 PAK ASSEMBLY TYPE: 1CL0	C		A
		14-JAN-85	SHEET 05	LOC. D06

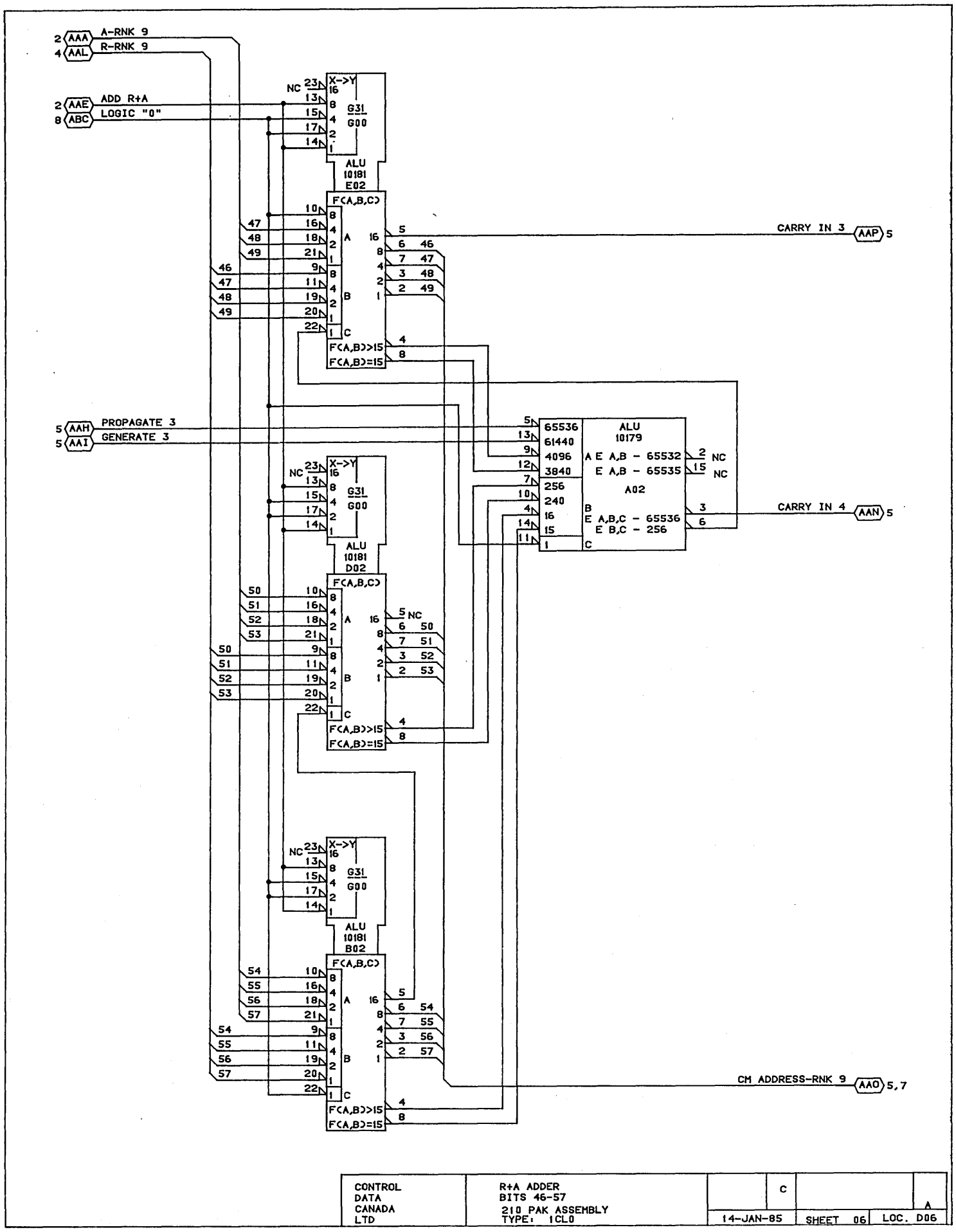

CONTROL DATA CANADA LTD	R+A ADDER BITS 46-57 210 PAK ASSEMBLY TYPE: 1CL0	C		A
		14-JAN-85	SHEET 06	LOC. D06

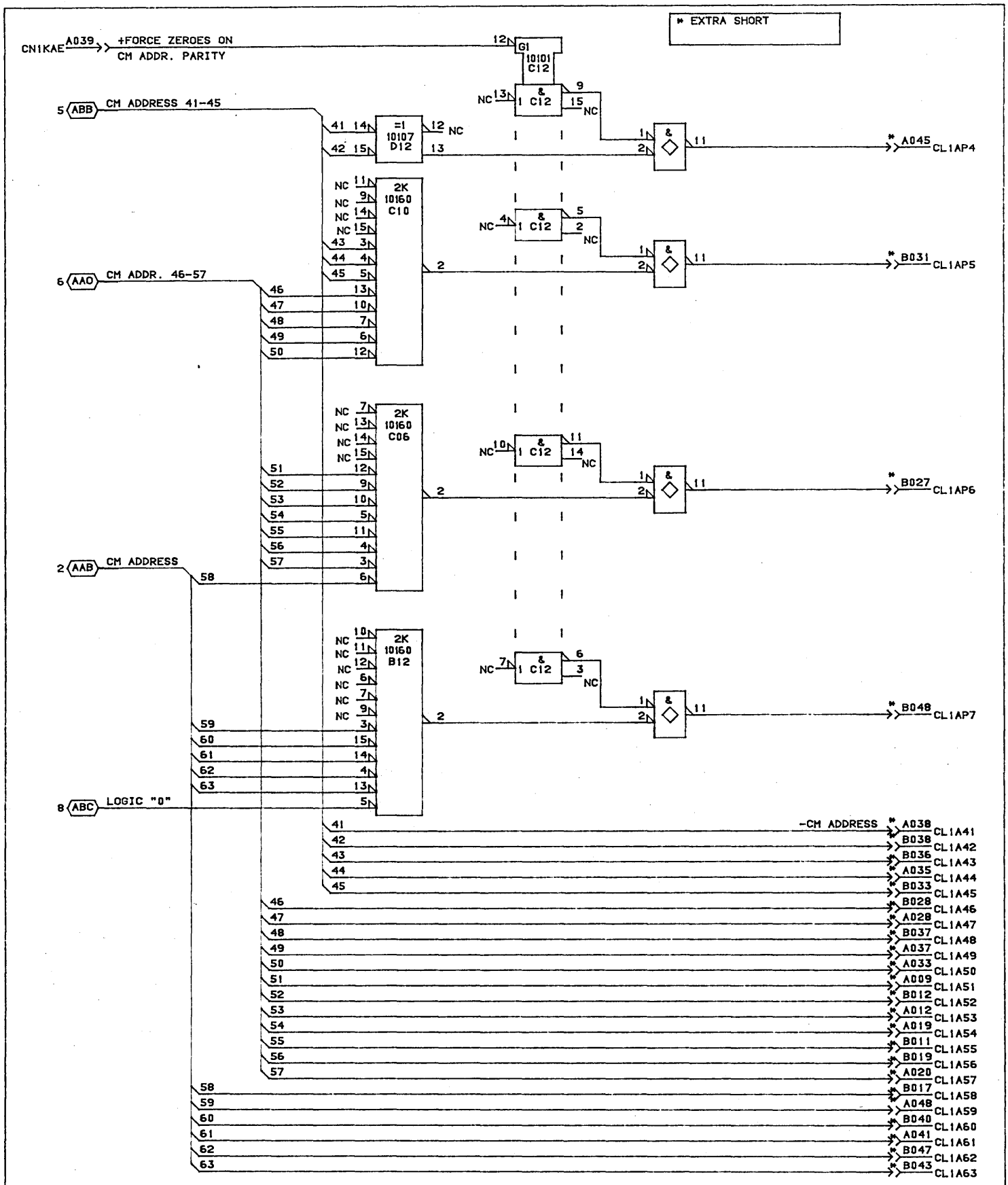

CONTROL DATA CANADA LTD	CM ADDRESS PARITY GENERATOR 210 PAK ASSEMBLY TYPE: 1CL0	C		A
		11-APR-85	SHEET 07	LOC. D06

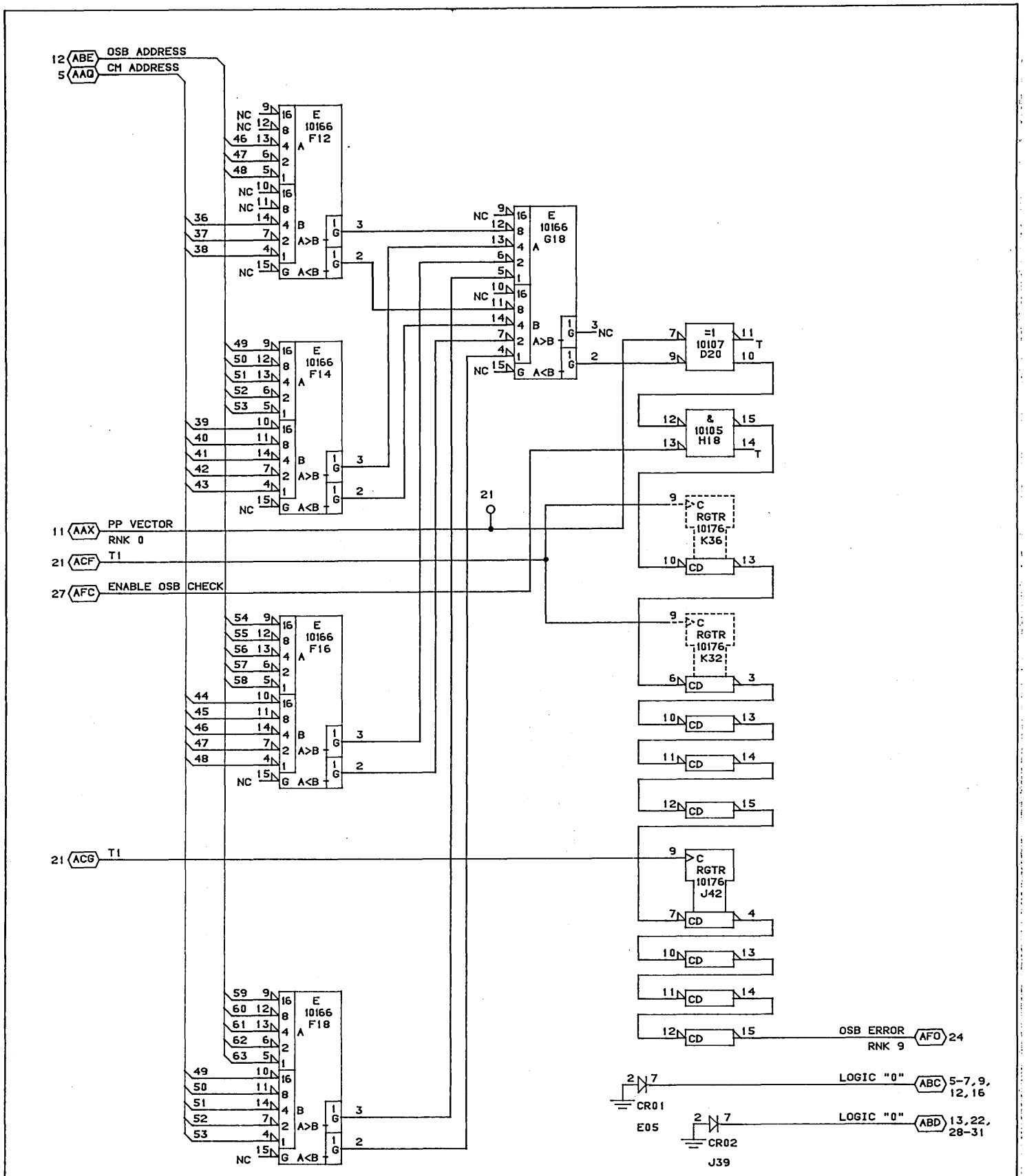

CONTROL DATA CANADA LTD	OS BOUNDS CHECKER 210 PAK ASSEMBLY TYPE: 1CL0	C		A
		14-JAN-85	SHEET 08	LOC. D06

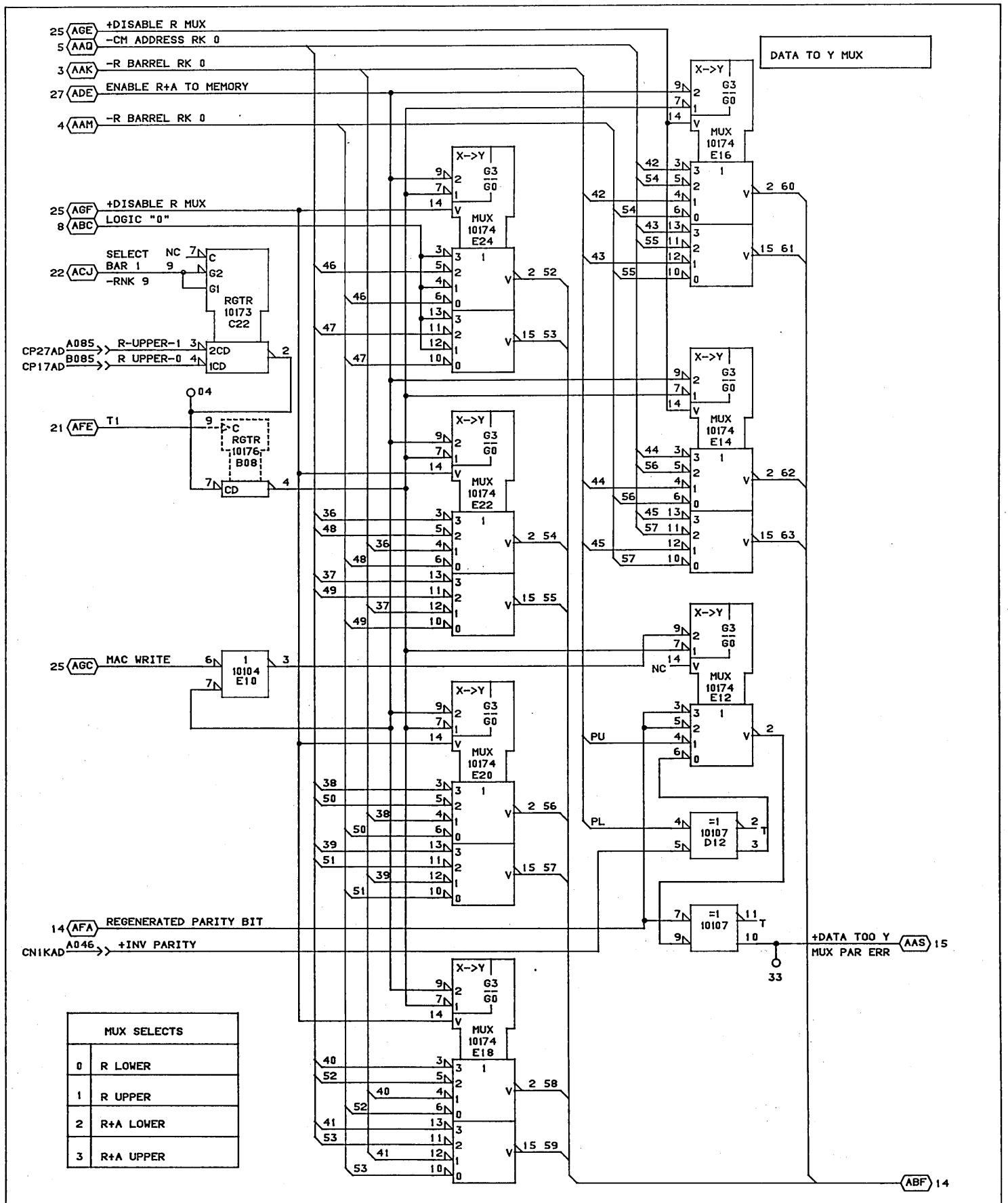

CONTROL DATA CANADA LTD	Y MUX 210 PAK ASSEMBLY TYPE: 1CL0	C	A
		14-JAN-85	SHEET 09 LOC. D06

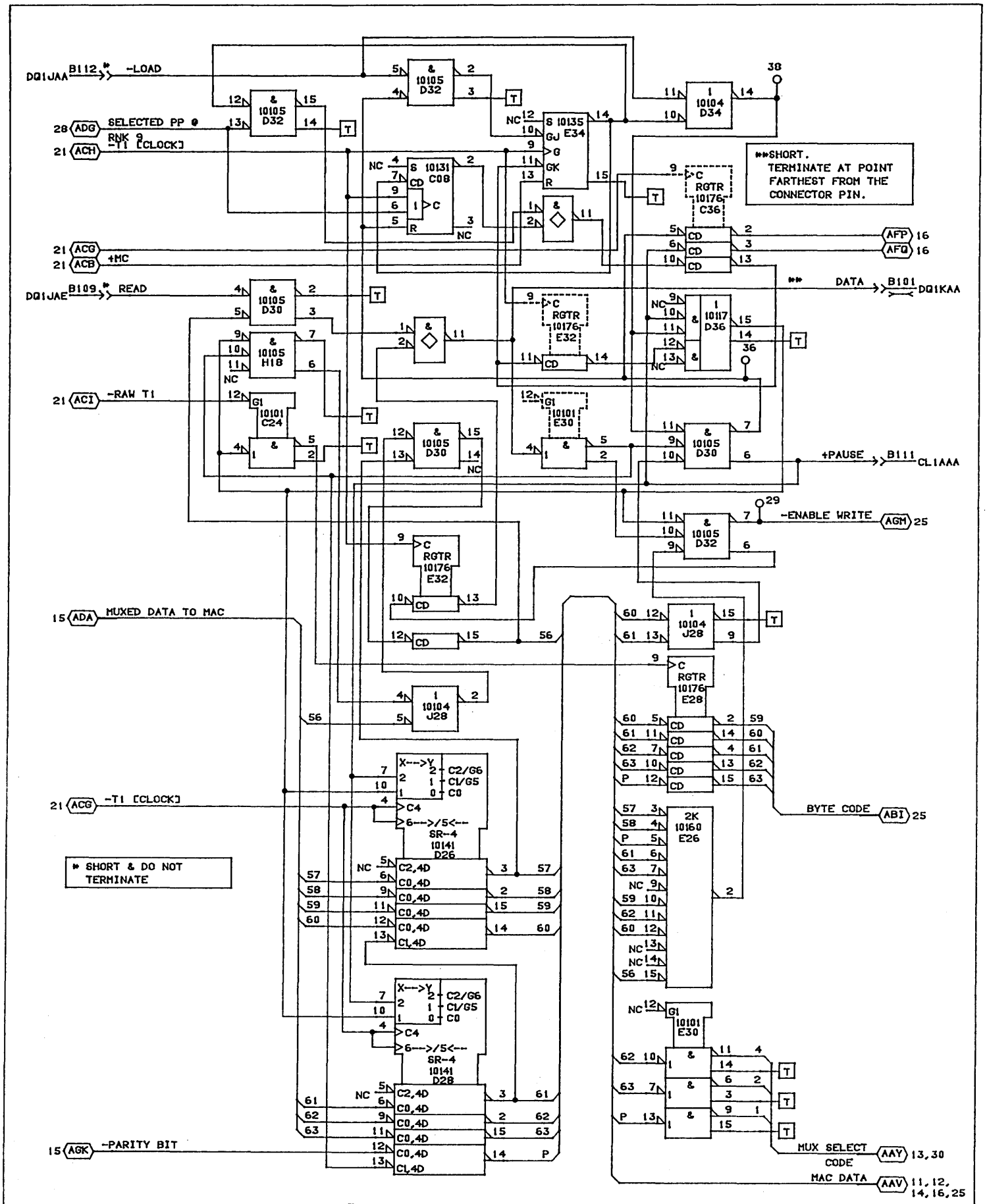
DQ1JAA B112 * -LOAD
28 ADG SELECTED PP @
RNK 9
21 ACH -T1 [CLOCK]
21 ACG
21 ACB +MC
DQ1JAE B109 * READ
21 ACI -RAW T1
15 ADA MUXED DATA TO MAC
21 ACG -T1 [CLOCK]
15 AGK -PARITY BIT
** SHORT & DO NOT TERMINATE
** SHORT. TERMINATE AT POINT FARTHEST FROM THE CONNECTOR PIN.
AFP 16
AFQ 16
** DATA B101 DQ1KAA
+PAUSE B111 CL1AAA
-ENABLE WRITE AGM 25
BYTE CODE ABI 25
MUX SELECT CODE AAY 13,30
MAC DATA AAV 11,12,14,16,25
& 10105 D32
& 10105 D30
& 10105 H18
S 10131 C08
S 10135 E34
1 10104 D34
1 10117 D36
RGTR 10176 C36
RGTR 10176 E32
G1 10101 C24
G1 10101 E30
1 10104 J28
RGTR 10176 E28
2K 10160 E26
X-->Y C2/G6 C1/G5 C0
C4
6-->/5<-- SR-4 10141 D26
C2,4D C0,4D C0,4D C0,4D CL4D
6-->/5<-- SR-4 10141 D28
CONTROL DATA CANADA LTD
MAC INTERFACE
210 PAK ASSEMBLY
TYPE: 1CL0
C
A
19-APR-85
SHEET 10

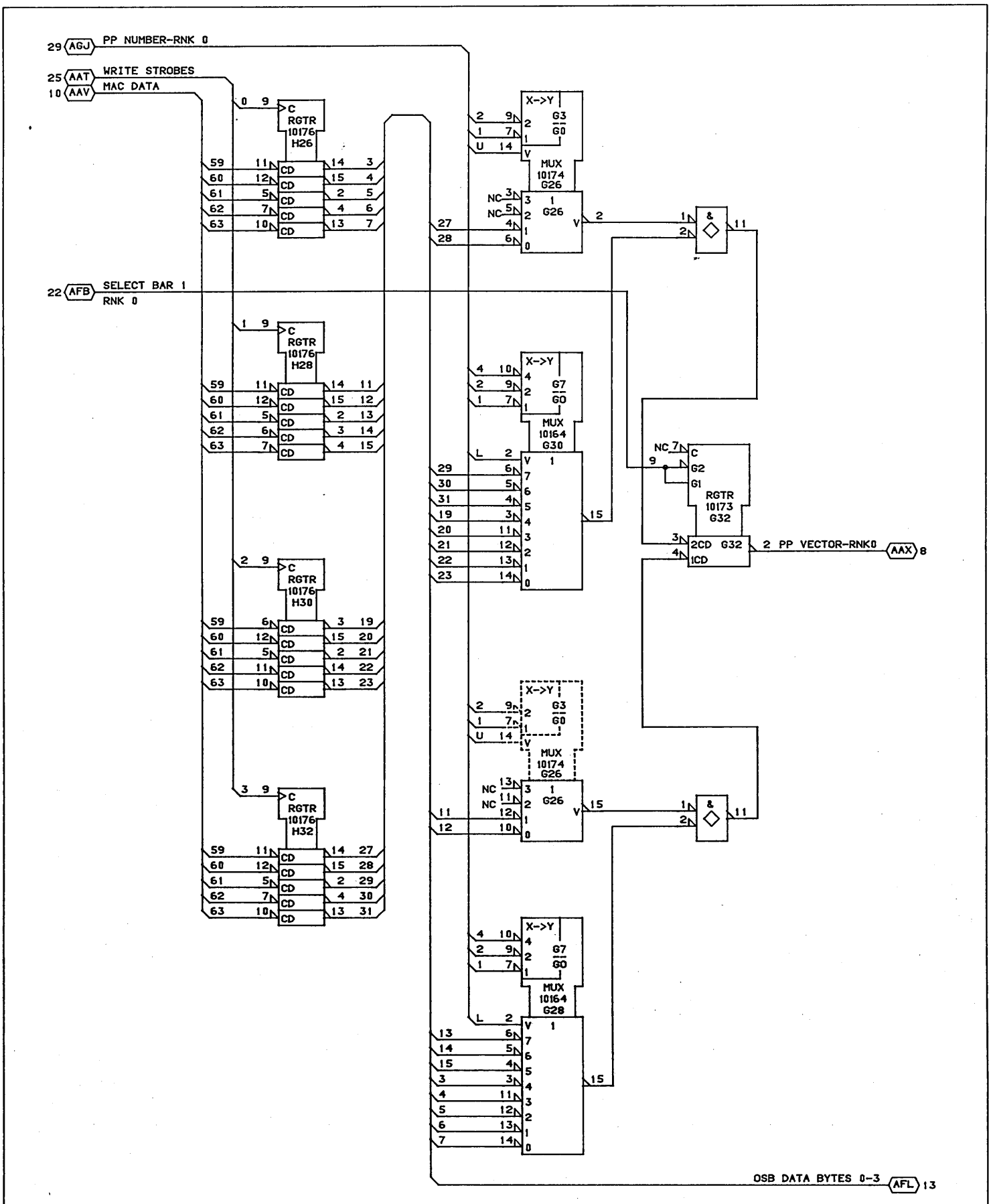

CONTROL DATA CANADA LTD	OSB MAINTENANCE REGISTER BYTES 0-3 210 PAK ASSEMBLY TYPE: 1CL0	C		A
		14-JAN-85	SHEET11	LOC. D06

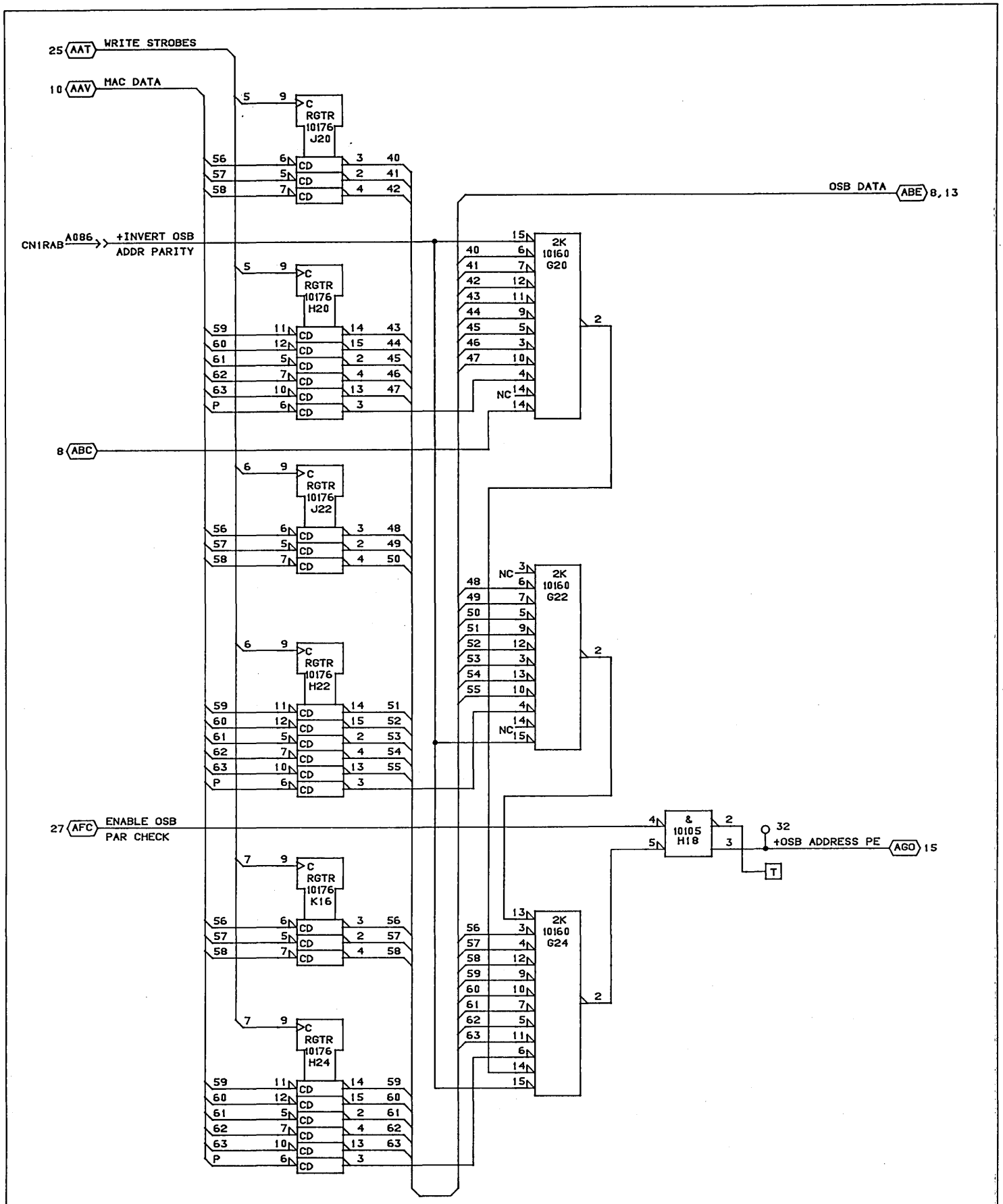

CONTROL DATA CANADA LTD	OSB MAINTENANCE REGISTER BYTES 5-7 210 PAK ASSEMBLY TYPE: 1CL0	C		A
		14-JAN-85	SHEET12	LOC D06

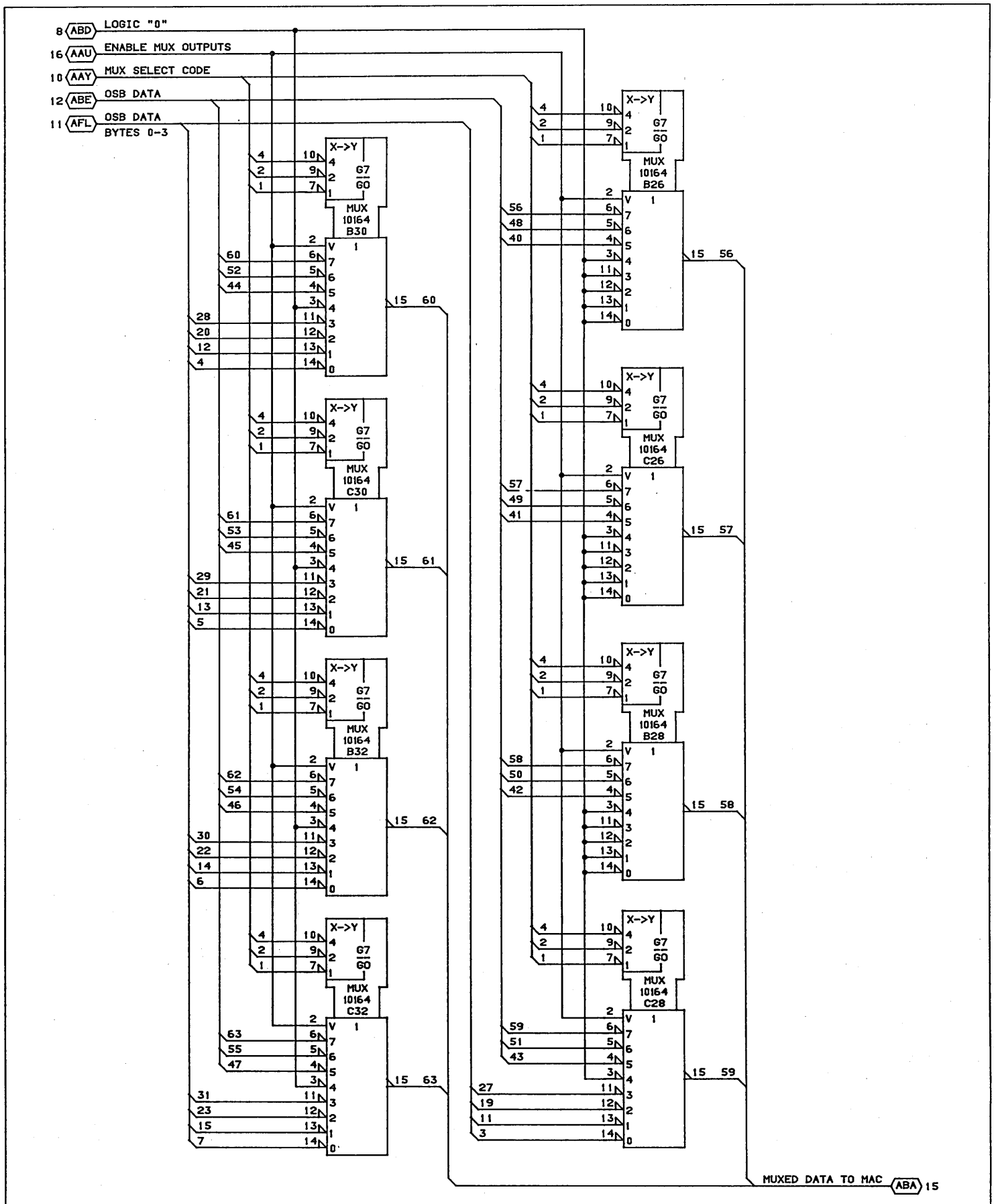

CONTROL DATA CANADA LTD	MAC MUX 210 PAK ASSEMBLY TYPE: 1CL0	C		A
		14-JAN-85	SHEET 13	LOC. D06

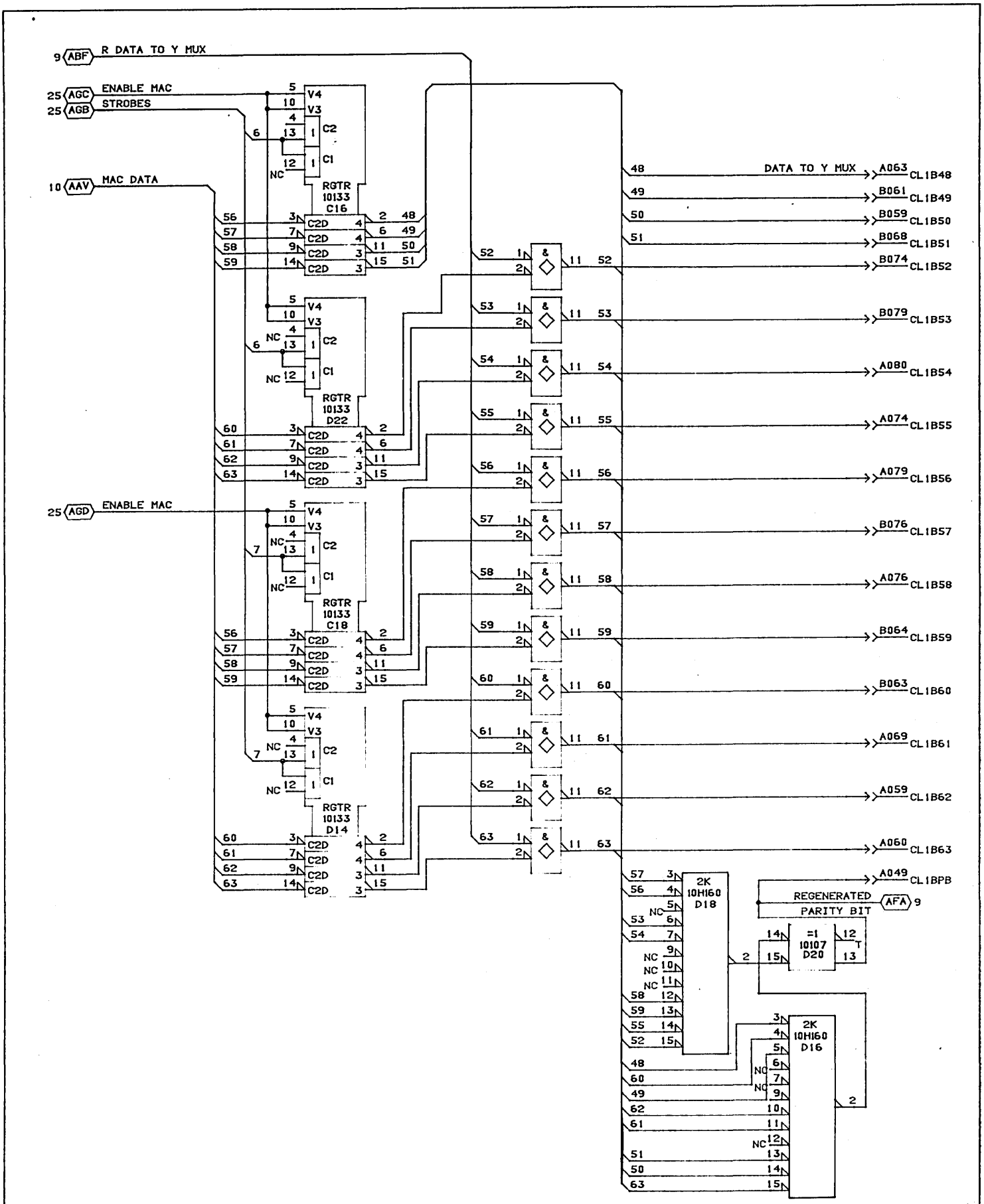

CONTROL DATA CANADA LTD

MAC REGISTERS TO WRITE
PP MEMORY
MODULE ASSEMBLY-210 PAK
TYPE: 1CL0

C

A

11-APR-85

SHEET 14

LOC. D06

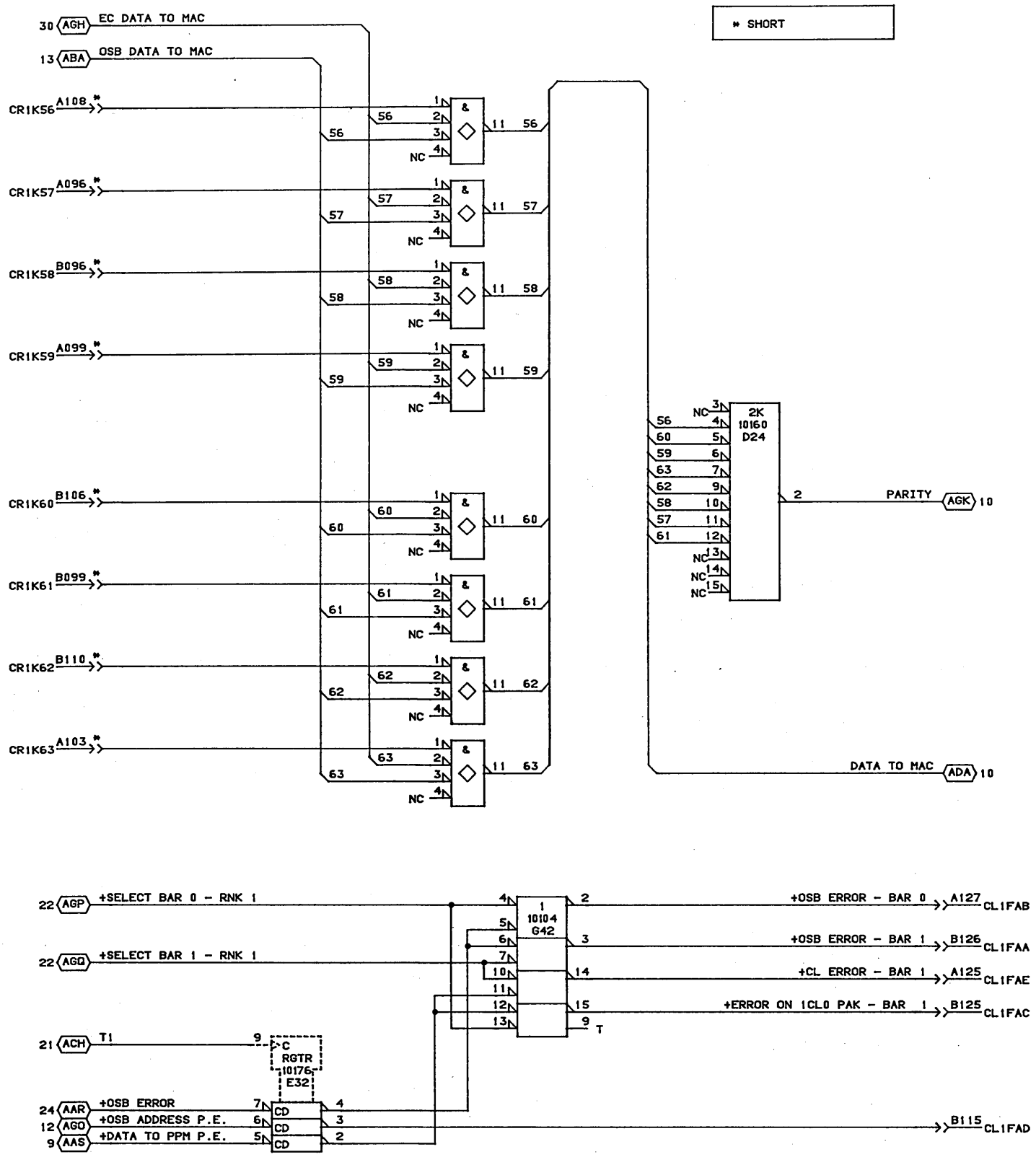

CONTROL DATA CANADA LTD	STATUS MUX MODULE ASSEMBLY-210 PAK TYPE: 1CL0	C		A
		14-JAN-85	SHEET 15	LOC. D06

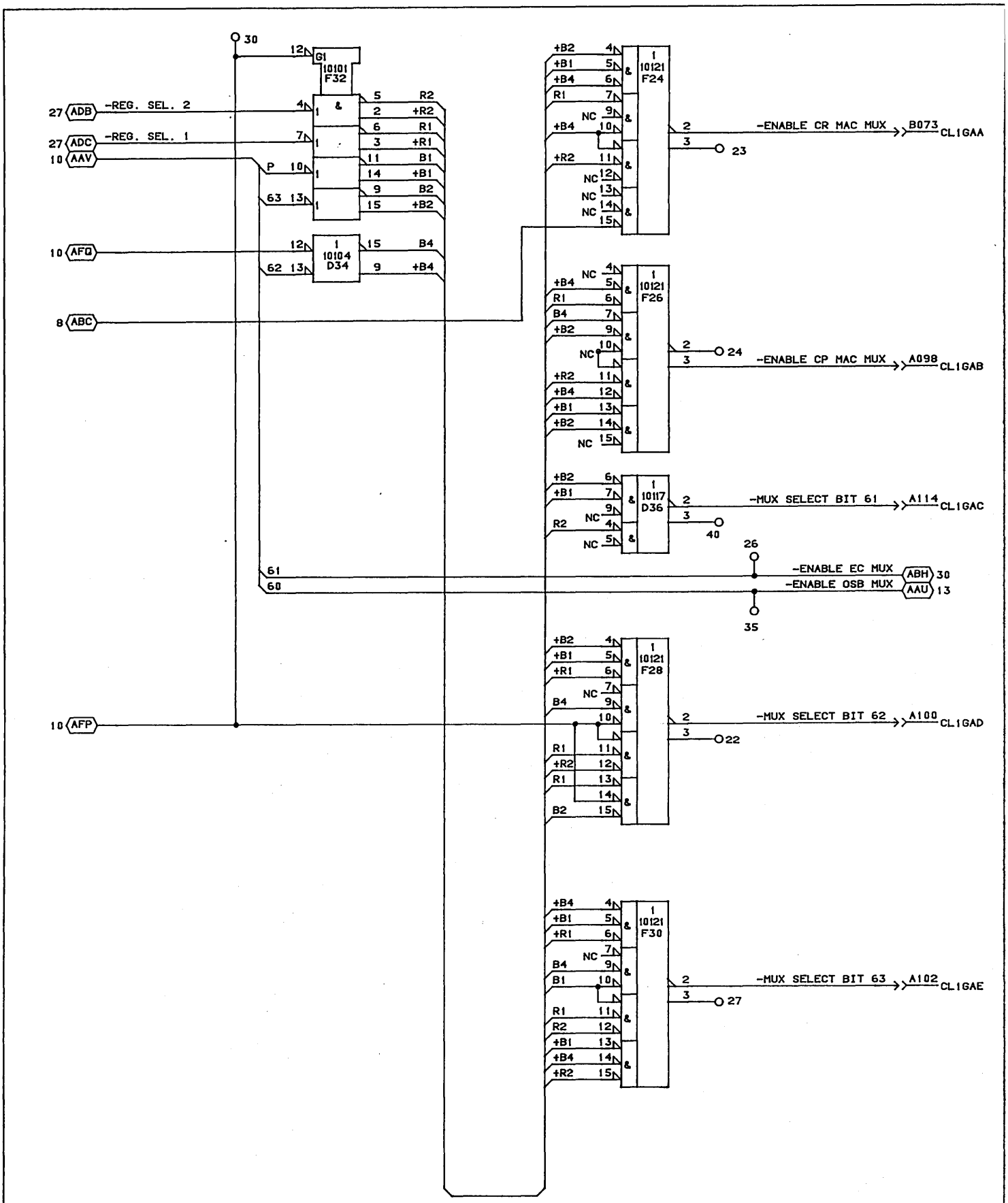

CONTROL DATA CANADA LTD	SELECT CODE GENERATOR FOR A,P,K,Q, PPM MUX MODULE ASSY:210 PAK TYPE: 1CL0	C		A
		14-JAN-85	SHEET 16	LOC. D06

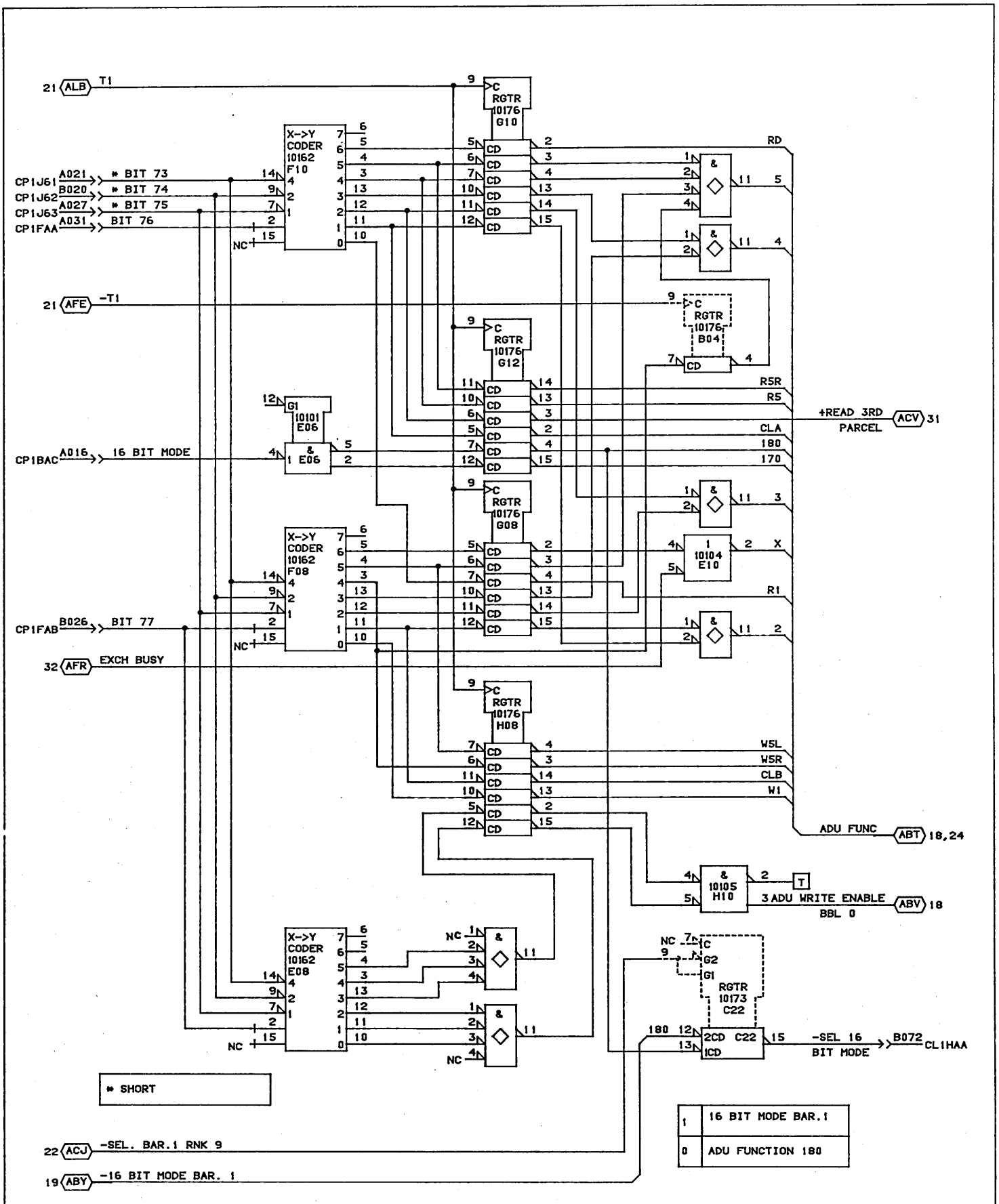
21 ALB T1
CP1J61 A021 * BIT 73
CP1J62 B020 * BIT 74
CP1J63 A027 * BIT 75
CP1FAA A031 BIT 76
X->Y CODER 10162 F10
RGTR 10176 G10
RD
21 AFE -T1
RGTR 10176 B04
RGTR 10176 G12
R5R
R5
+READ 3RD PARCEL ACV 31
CP1BAC A016 16 BIT MODE
G1 10101 E06
CLA
180
170
RGTR 10176 G08
X->Y CODER 10162 F08
10104 E10
X
R1
CP1FAB B026 BIT 77
32 AFR EXCH BUSY
RGTR 10176 H08
W5L
W5R
CLB
W1
ADU FUNC ABT 18,24
10105 H10
3 ADU WRITE ENABLE BBL 0 ABV 18
X->Y CODER 10162 E08
RGTR 10173 C22
-SEL 16 BIT MODE B072 CL1HAA
* SHORT
22 ACJ -SEL. BAR.1 RNK 9
19 ABY -16 BIT MODE BAR. 1
1 16 BIT MODE BAR.1
0 ADU FUNCTION 180
CONTROL DATA CANADA LTD
BARREL 0
ADU FUNCTION DECODER
MODULE ASSEMBLY - 210 PAK
TYPE: 1CL0
C
A
11-APR-85
SHEET 17

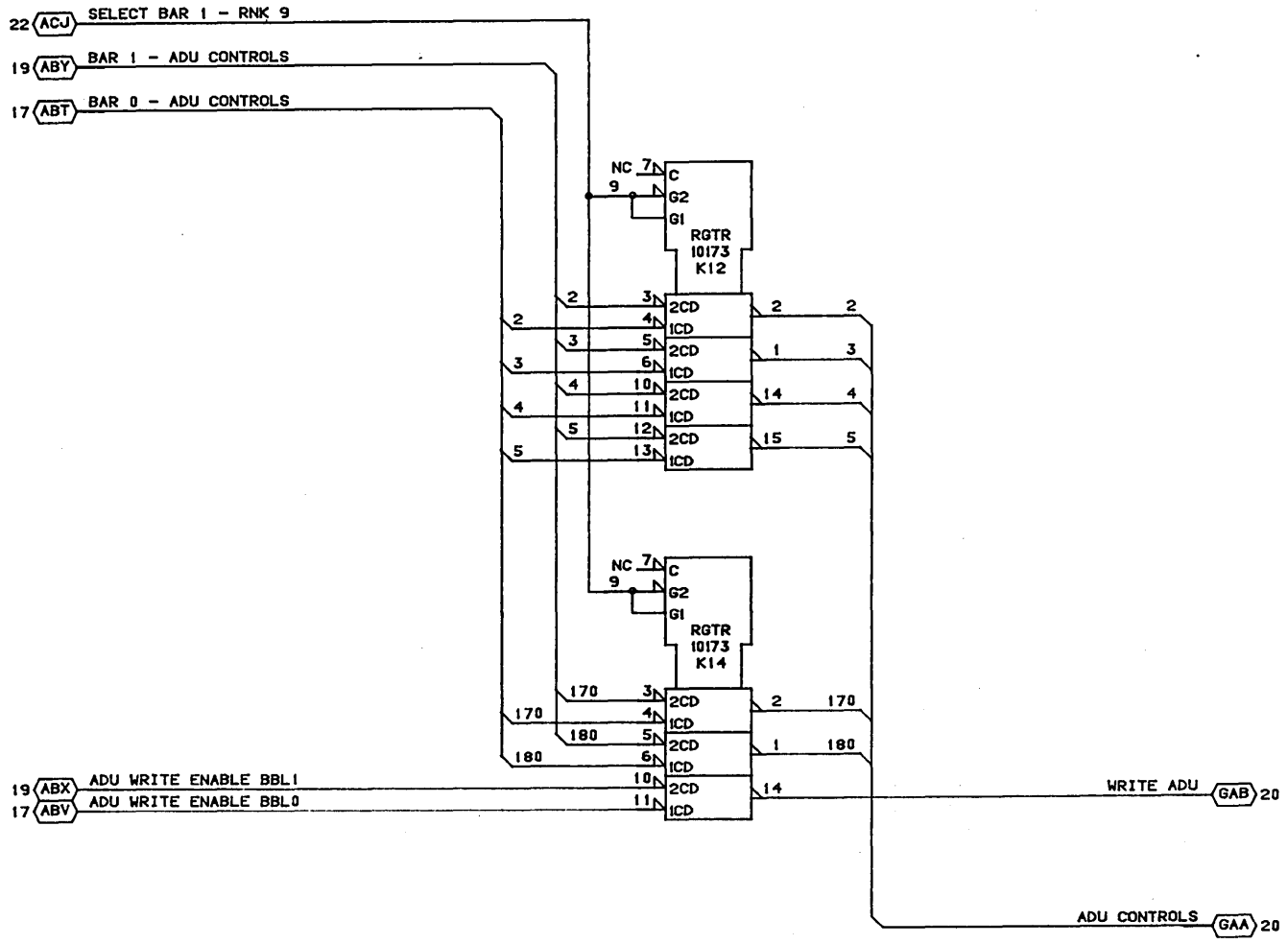

CONTROL DATA CANADA LTD	ADU CONTROLS BARREL SELECTION MODULE ASSY: 210 PAK TYPE: 1CL0	C		A
		14-JAN-85	SHEET 18	

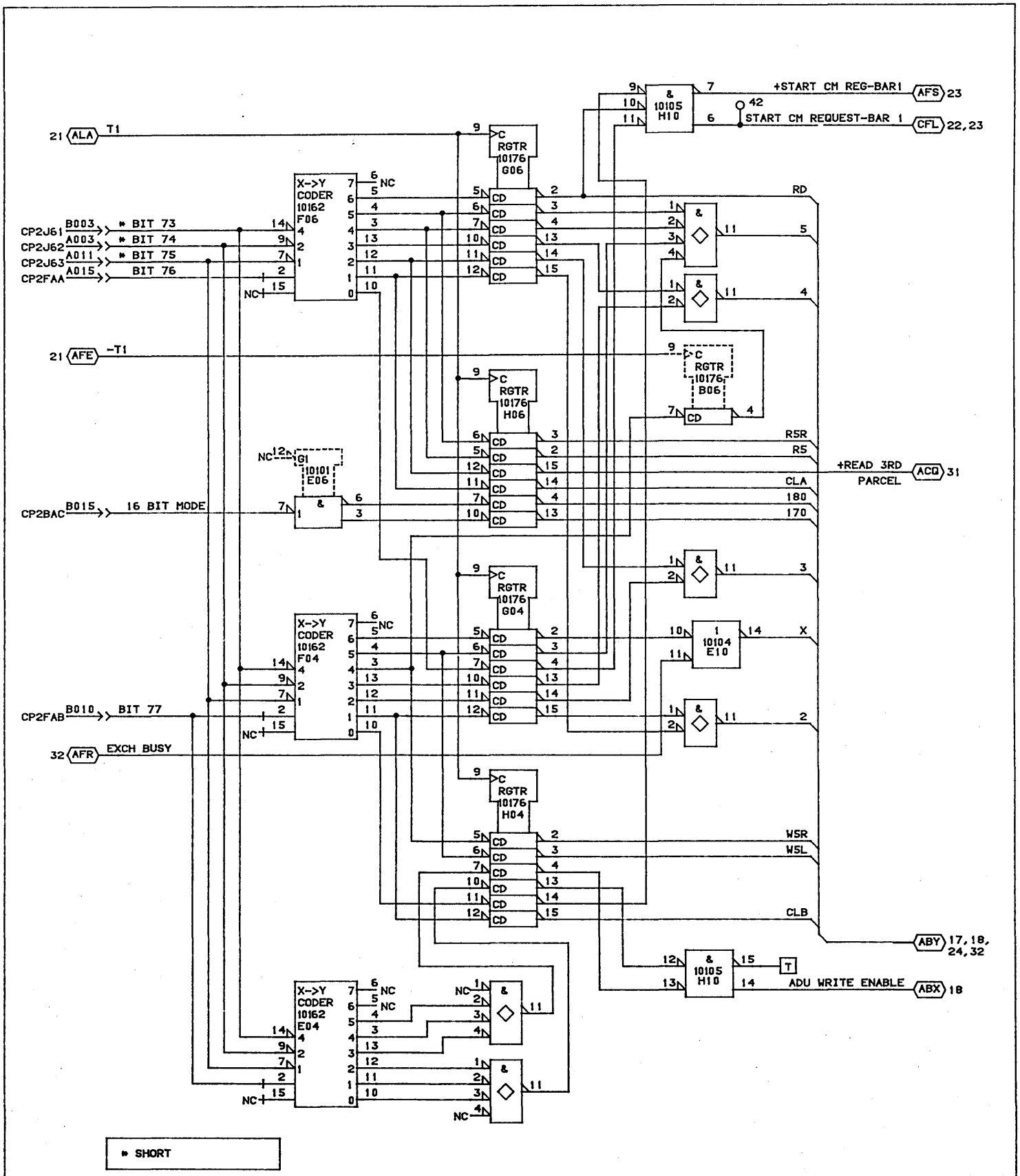

CONTROL DATA CANADA LTD	BARREL 1 ADU FUNCTION DECODER MODULE ASSEMBLY - 210 PAK TYPE: 1CL0	C		A
		11-APR-85	SHEET 19	

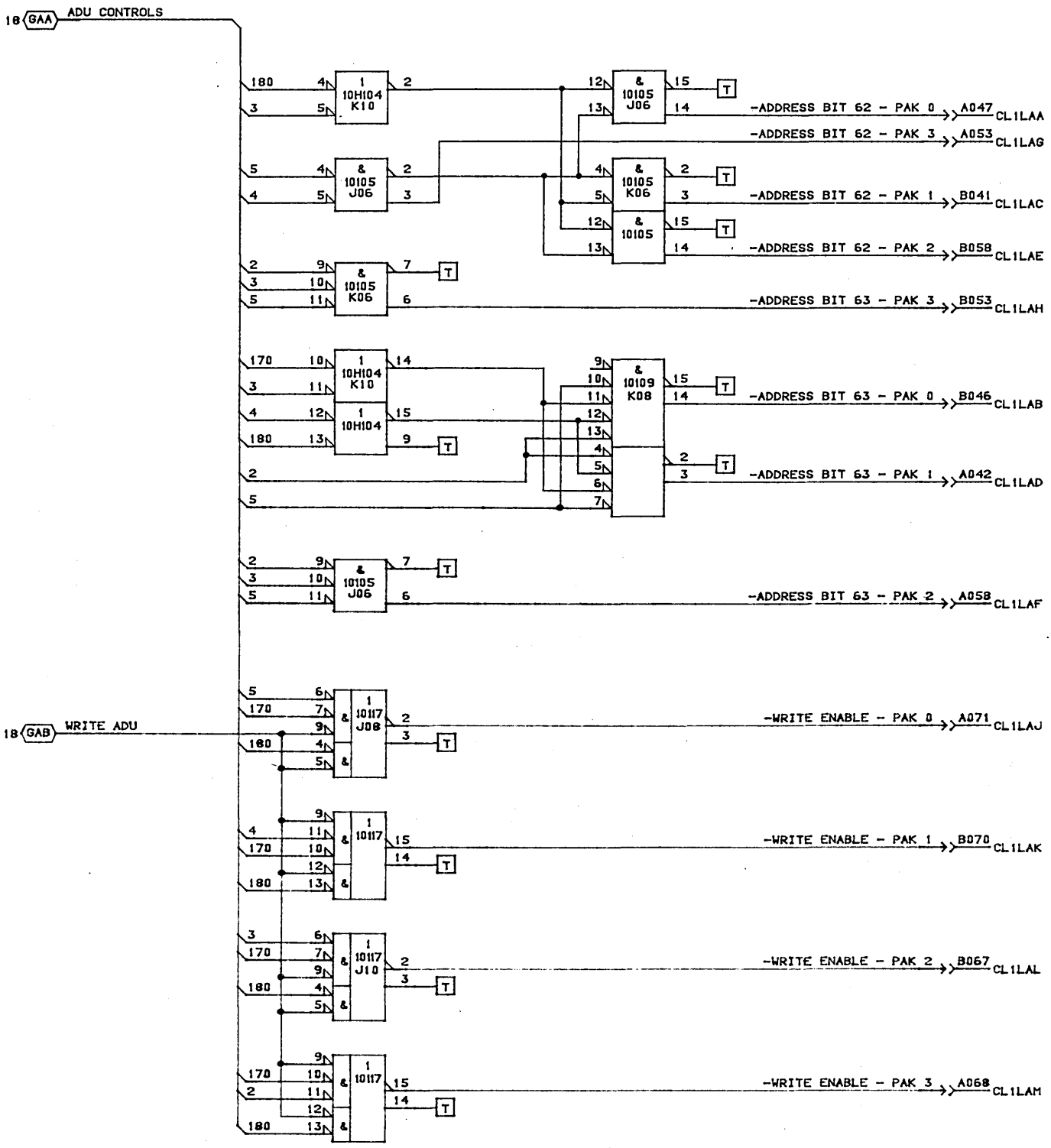

CONTROL DATA CANADA LTD	ADU PAK ADDRESS GENERATOR MODULE ASSY: 210 PAK TYPE: 1CL0		C	A
		11-APR-85	SHEET 20	

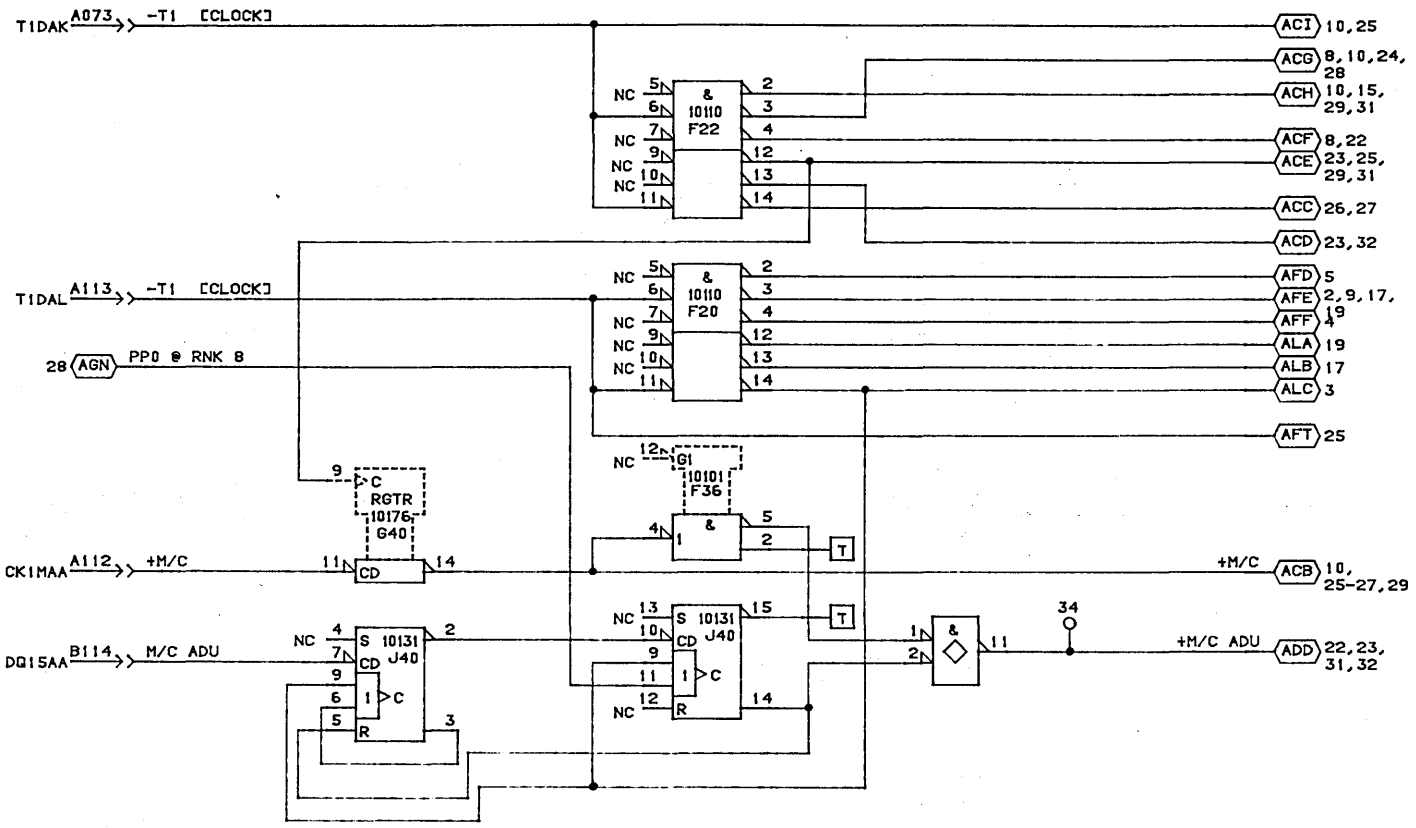

CONTROL DATA CANADA LTD	CLOCK @ MC FANOUT MODULE ASSY:210 PAK TYPE:1CL0		C		A
		11-APR-85	SHEET 21	LOC. D06	

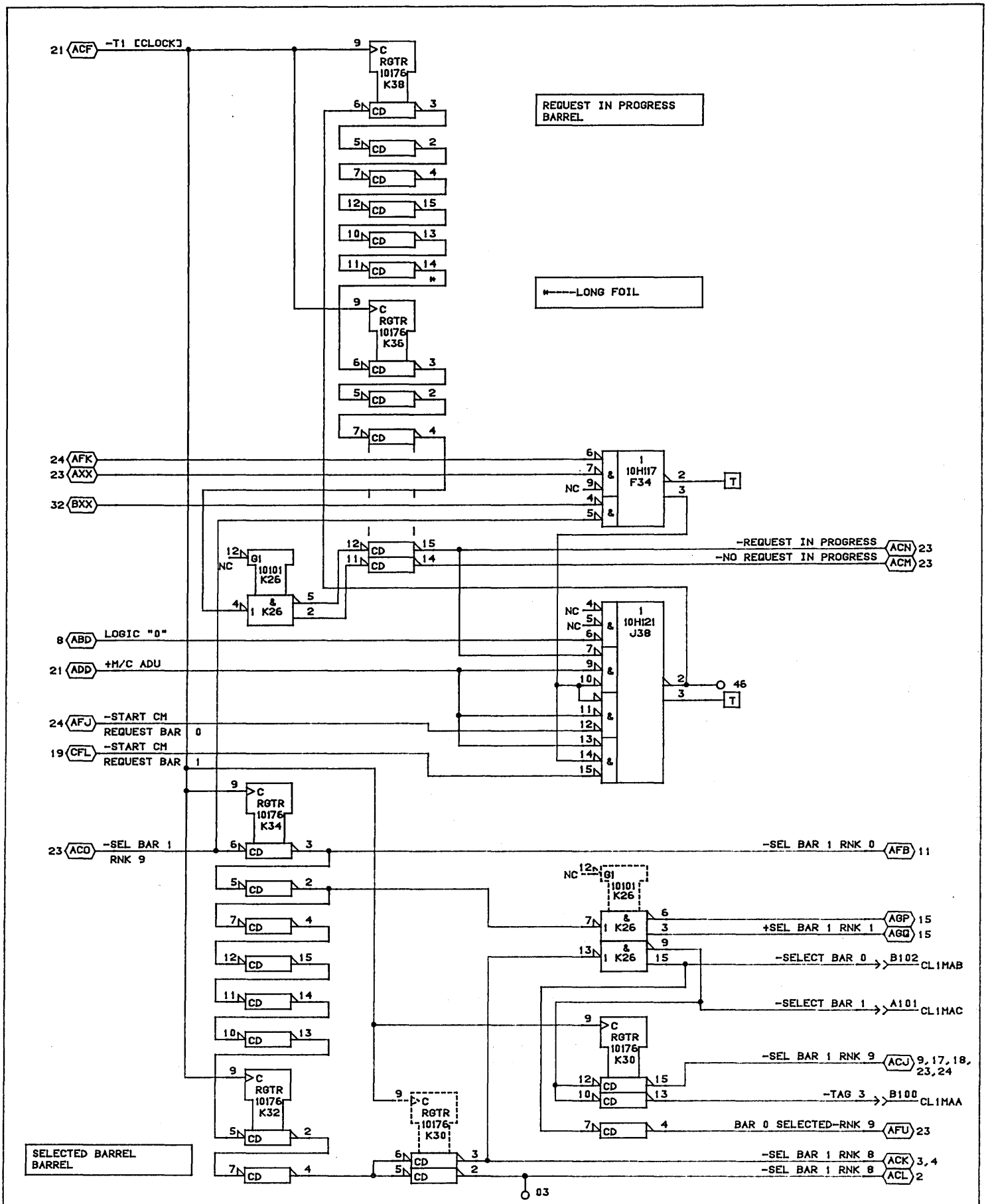
21 ACF -T1 [CLOCK]
REQUEST IN PROGRESS BARREL
LONG FOIL
24 AFK
23 AXX
32 BXX
-REQUEST IN PROGRESS ACN 23
-NO REQUEST IN PROGRESS ACM 23
8 ABD LOGIC "0"
21 ADD +M/C ADU
24 AFJ -START CM REQUEST BAR 0
19 CFL -START CM REQUEST BAR 1
23 ACO -SEL BAR 1 RNK 9
-SEL BAR 1 RNK 0 AFB 11
+SEL BAR 1 RNK 1 AGP 15 AGQ 15
-SELECT BAR 0 B102 CL1MAB
-SELECT BAR 1 A101 CL1MAC
-SEL BAR 1 RNK 9 ACJ 9,17,18,23,24
-TAG 3 B100 CL1MAA
BAR 0 SELECTED-RNK 9 AFU 23
-SEL BAR 1 RNK 8 ACK 3,4
-SEL BAR 1 RNK 8 ACL 2
SELECTED BARREL BARREL
03
CONTROL DATA CANADA LTD
REQUEST IN PROGRESS & SELECTED BARREL
MODULE ASSY:210 PAK
TYPE: 1CL0
C
A
17-APR-85
SHEET 22

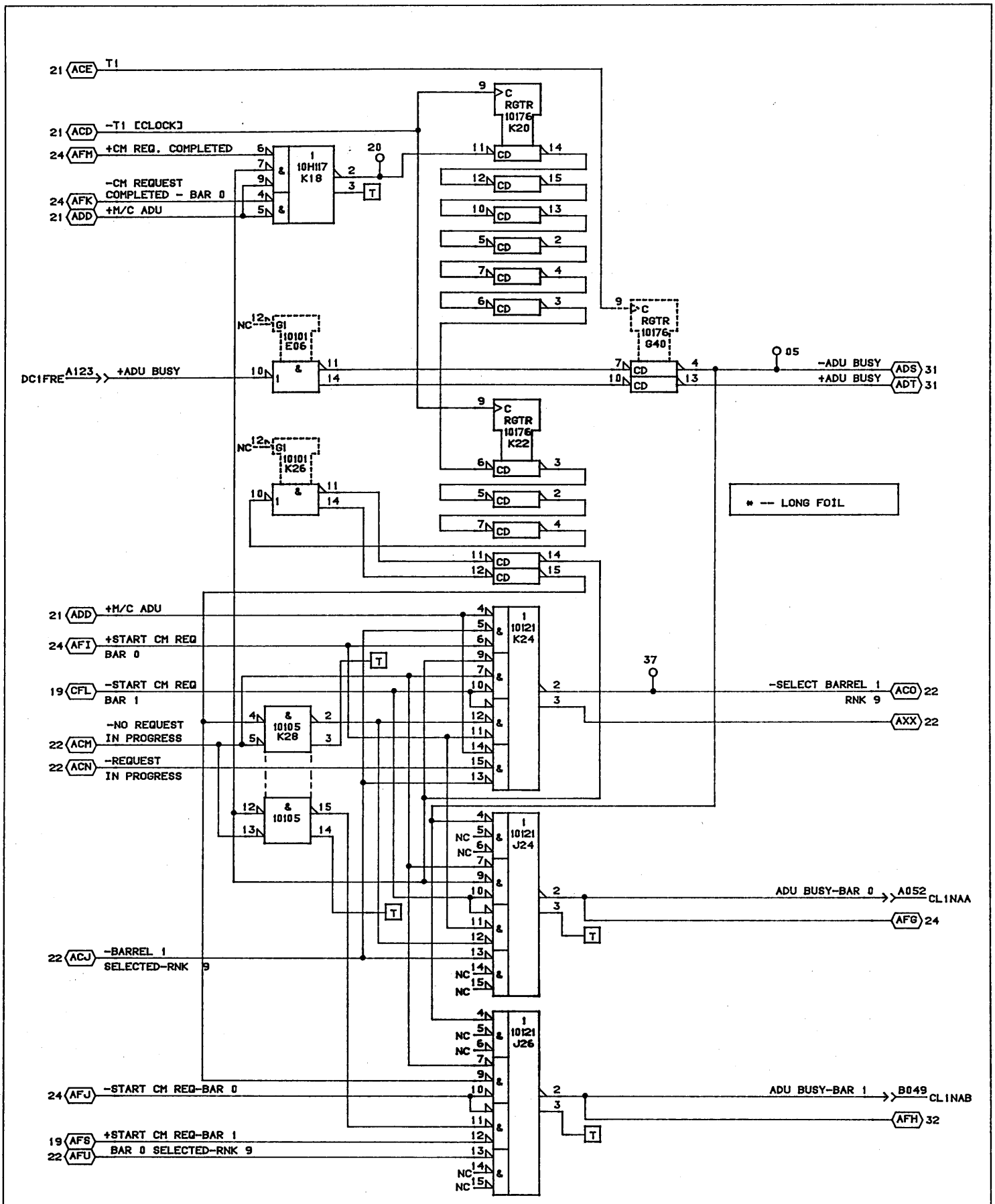

CONTROL DATA CANADA LTD	PRIORITY STATUS BARREL MODULE ASSY:210 PAK TYPE: 1CL0	C		A
		19-APR-85	SHEET 23	

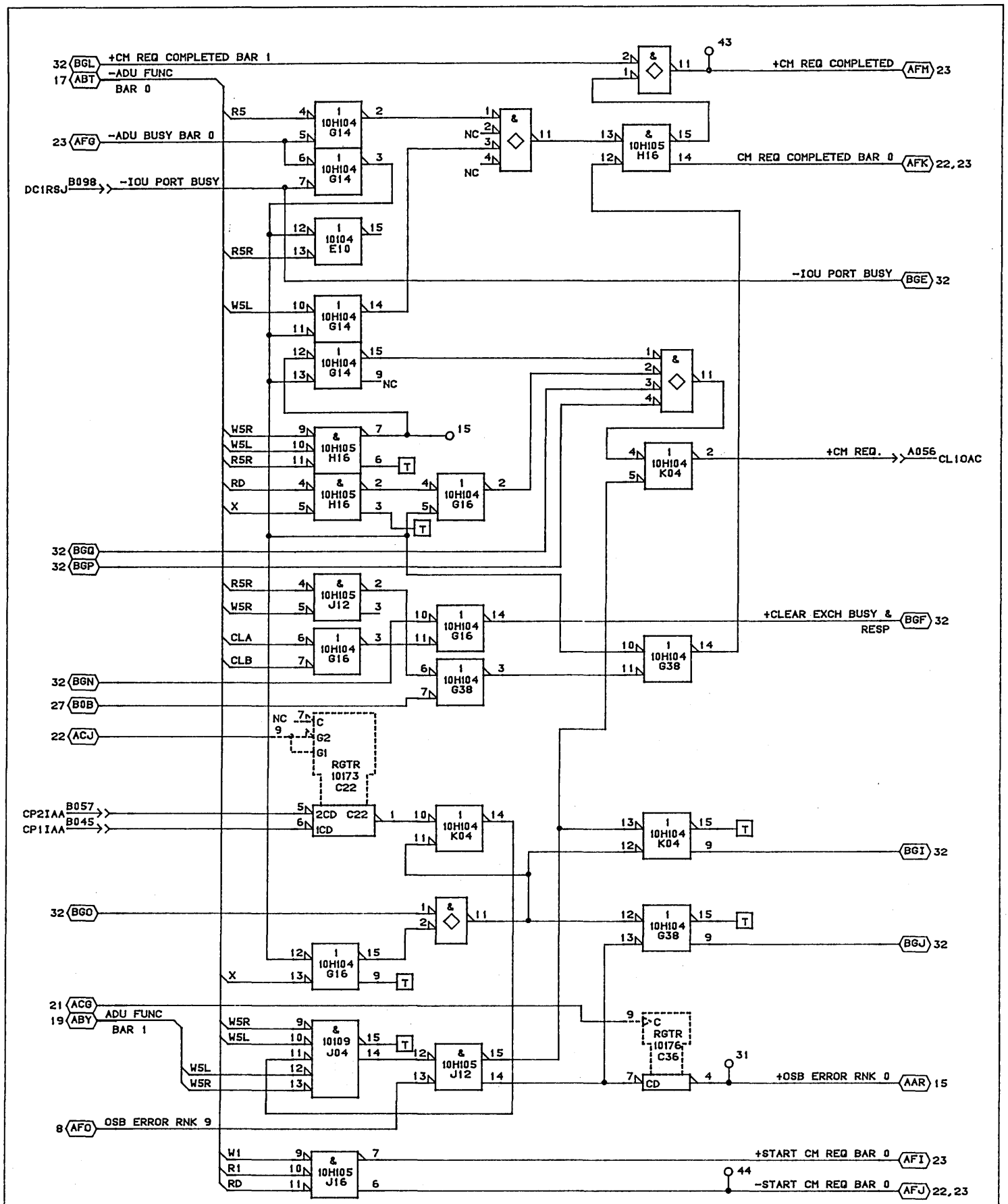

CONTROL DATA CANADA LTD	ADU CONTROLS MODULE ASSY:210 PAK TYPE: 1CL0	C		A
		19-APR-85	SHEET 24	

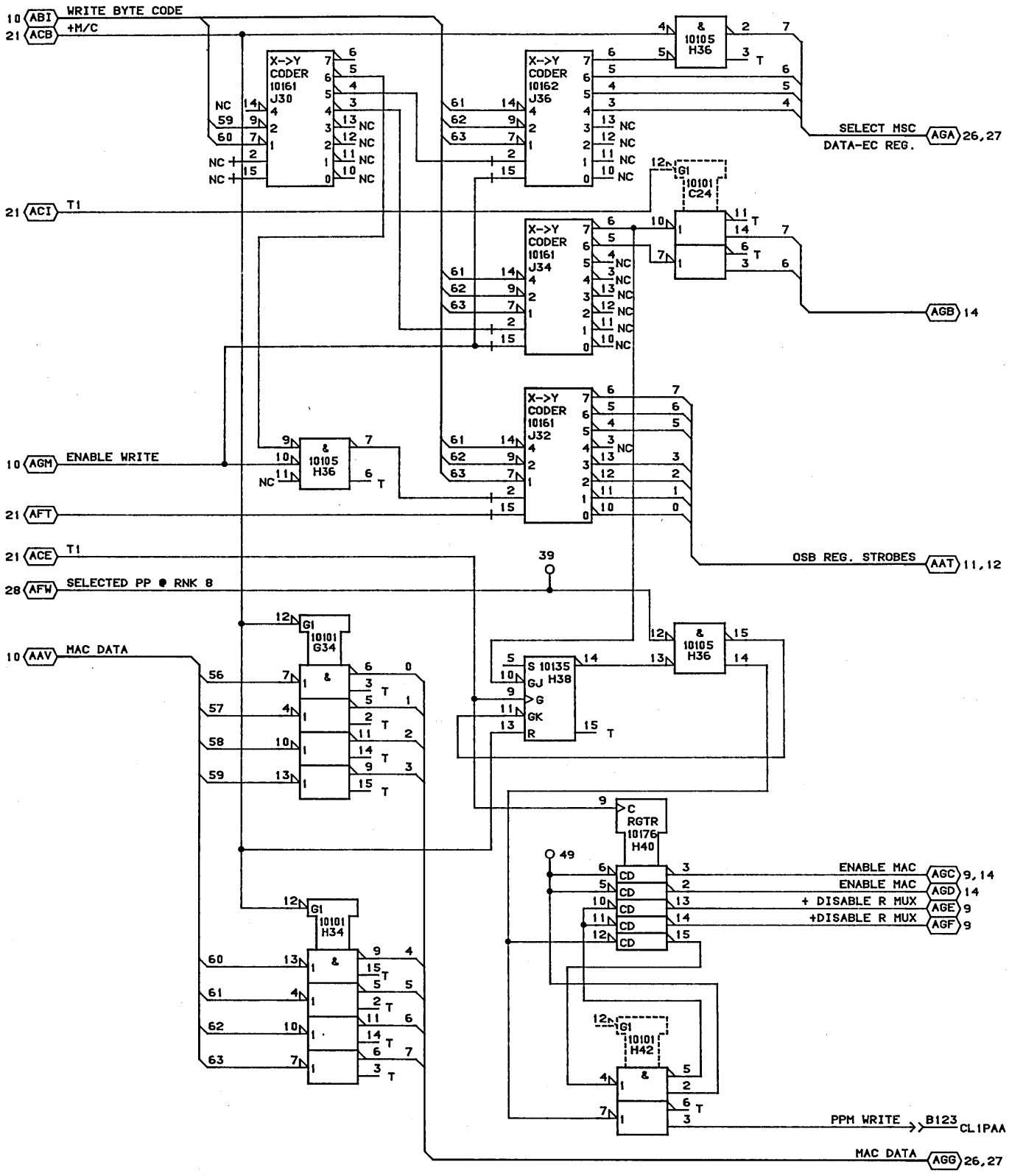

CONTROL DATA CANADA LTD	EC REGISTER STROBE DECODER MODULE ASSEMBLY-210 PAK TYPE: 1CL0	C		A
		14-JAN-85	SHEET 25	LOC D06

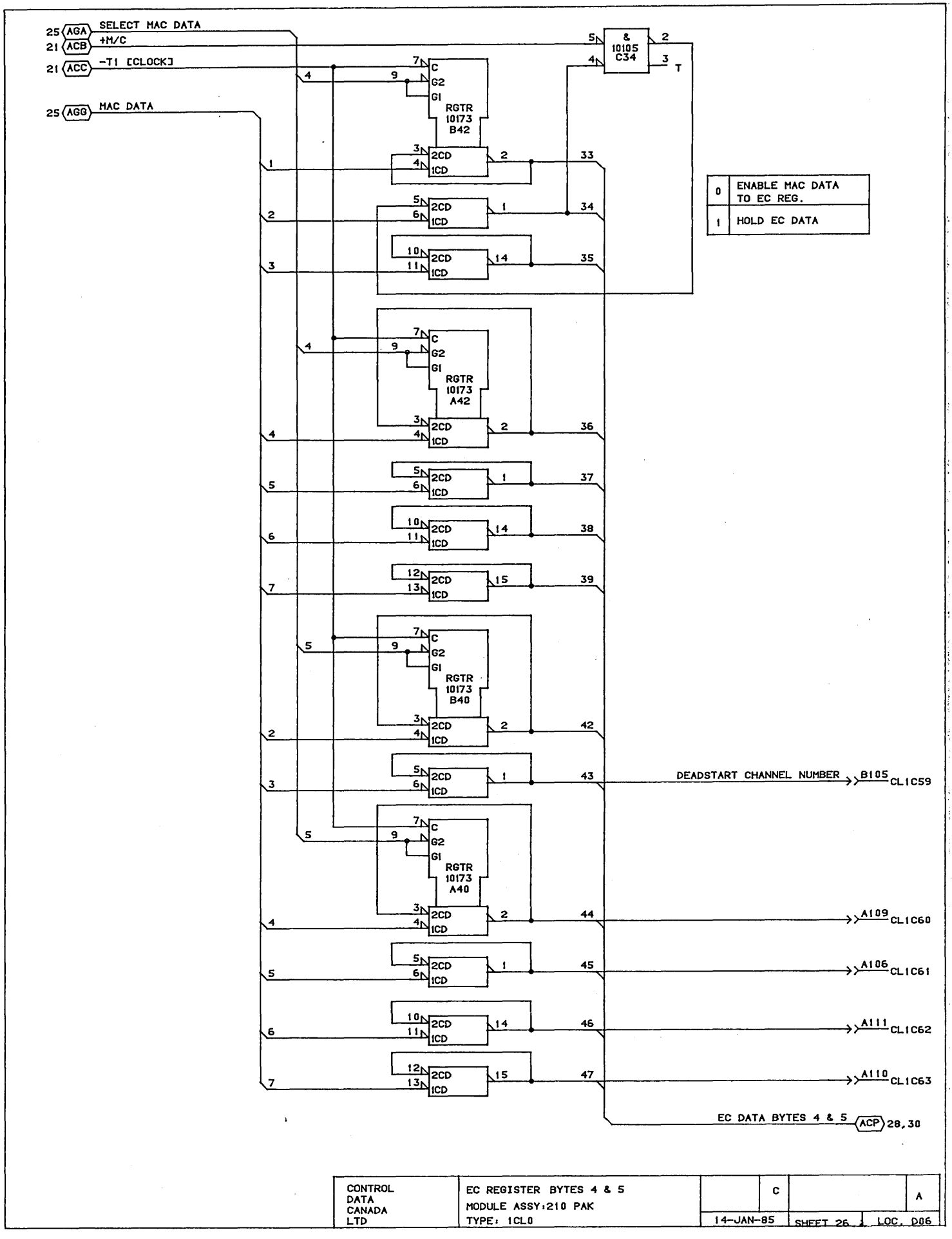

CONTROL DATA CANADA LTD	EC REGISTER BYTES 4 & 5 MODULE ASSY:210 PAK TYPE: 1CL0	C		A
		14-JAN-85	SHEET 26	LOC. D06

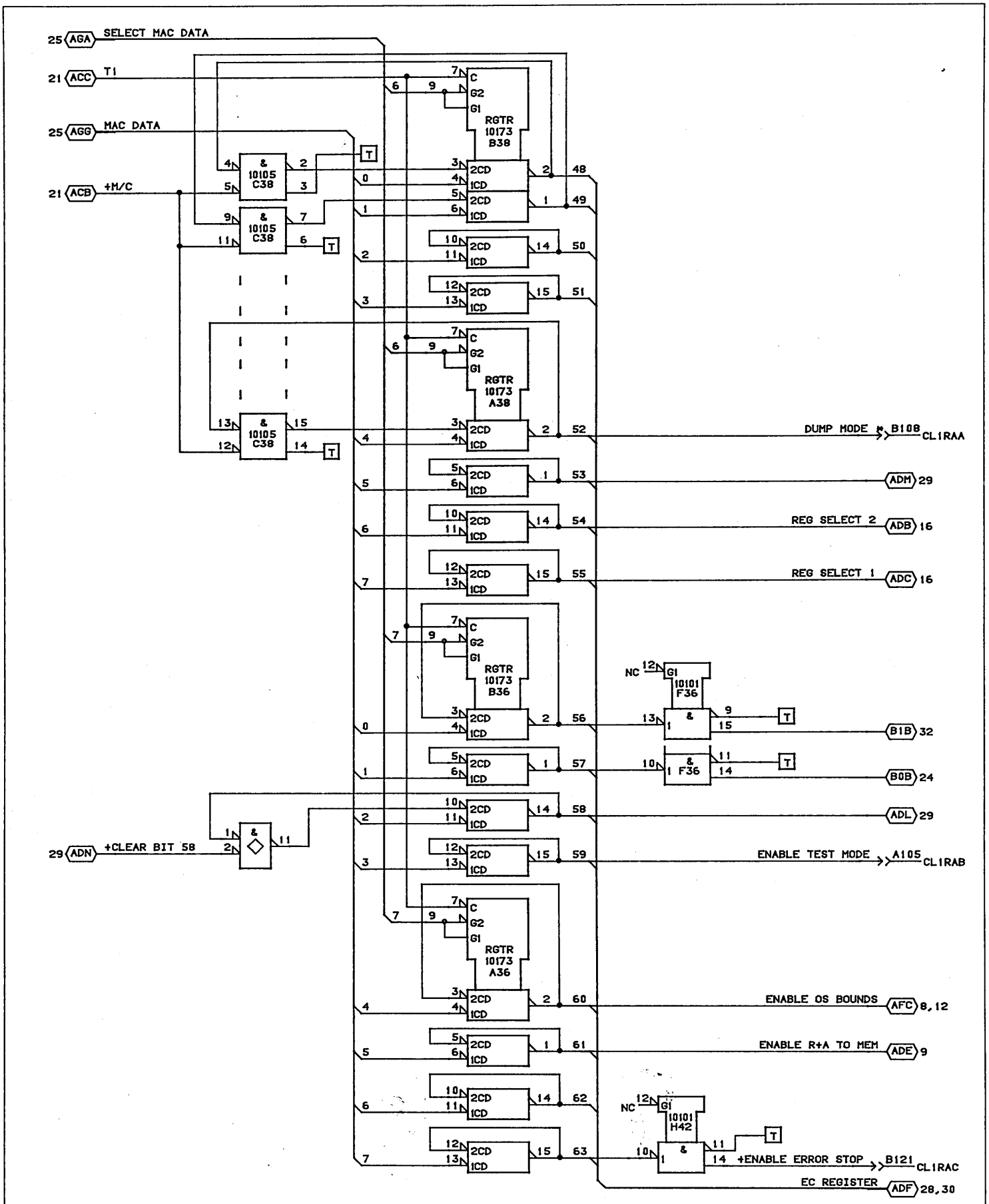

CONTROL DATA CANADA LTD	EC REGISTER BYTES 6 & 7 MODULE ASSEMBLY- 210 PAK TYPE: 1CL0	C		A
		19-APR-85	SHEET 27	

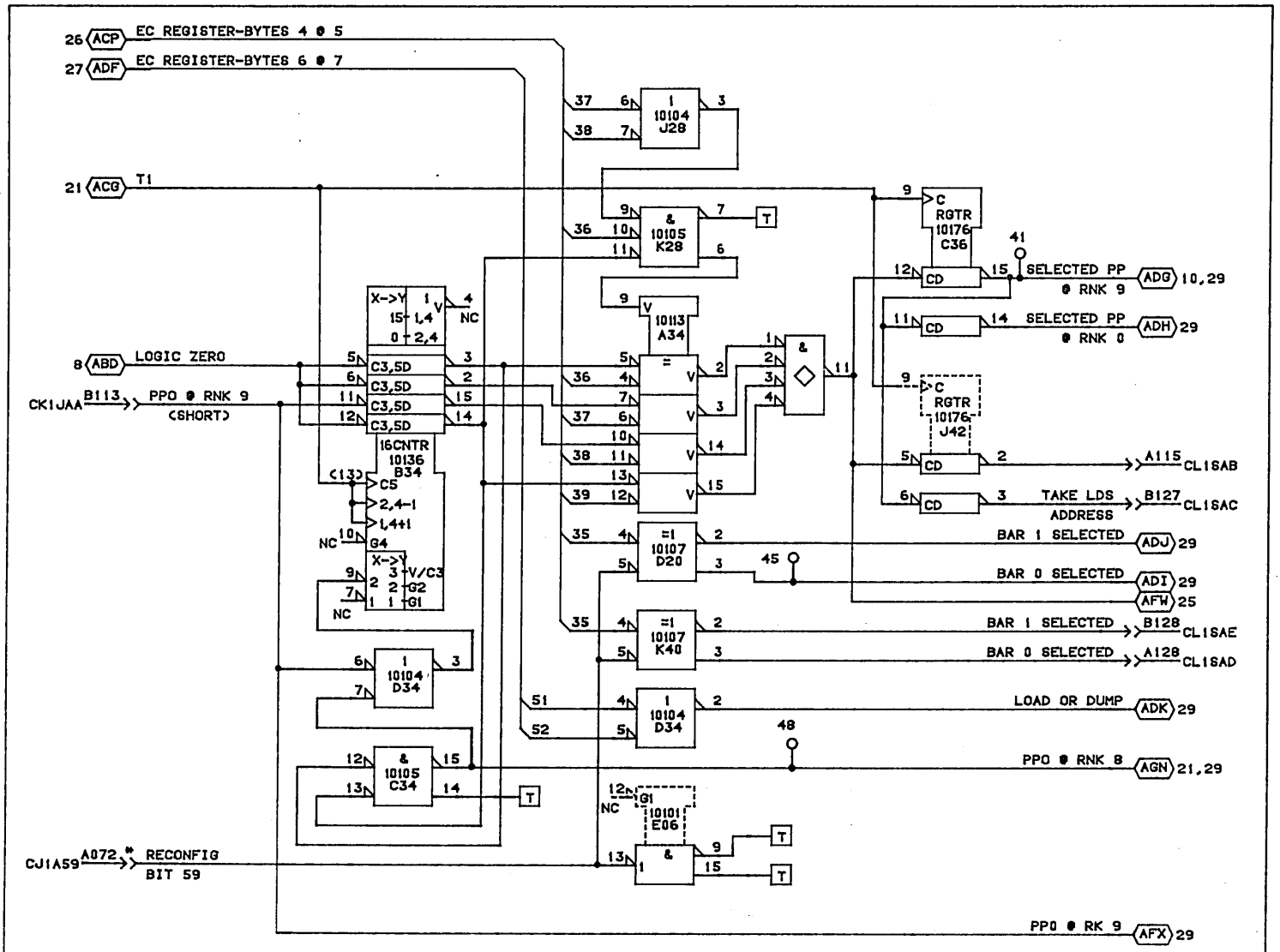

CONTROL DATA CANADA LTD	MODULE ASSEMBLY - 210 PAK TYPE: 1CL0	C		A
		11-APR-85	SHEET 28	

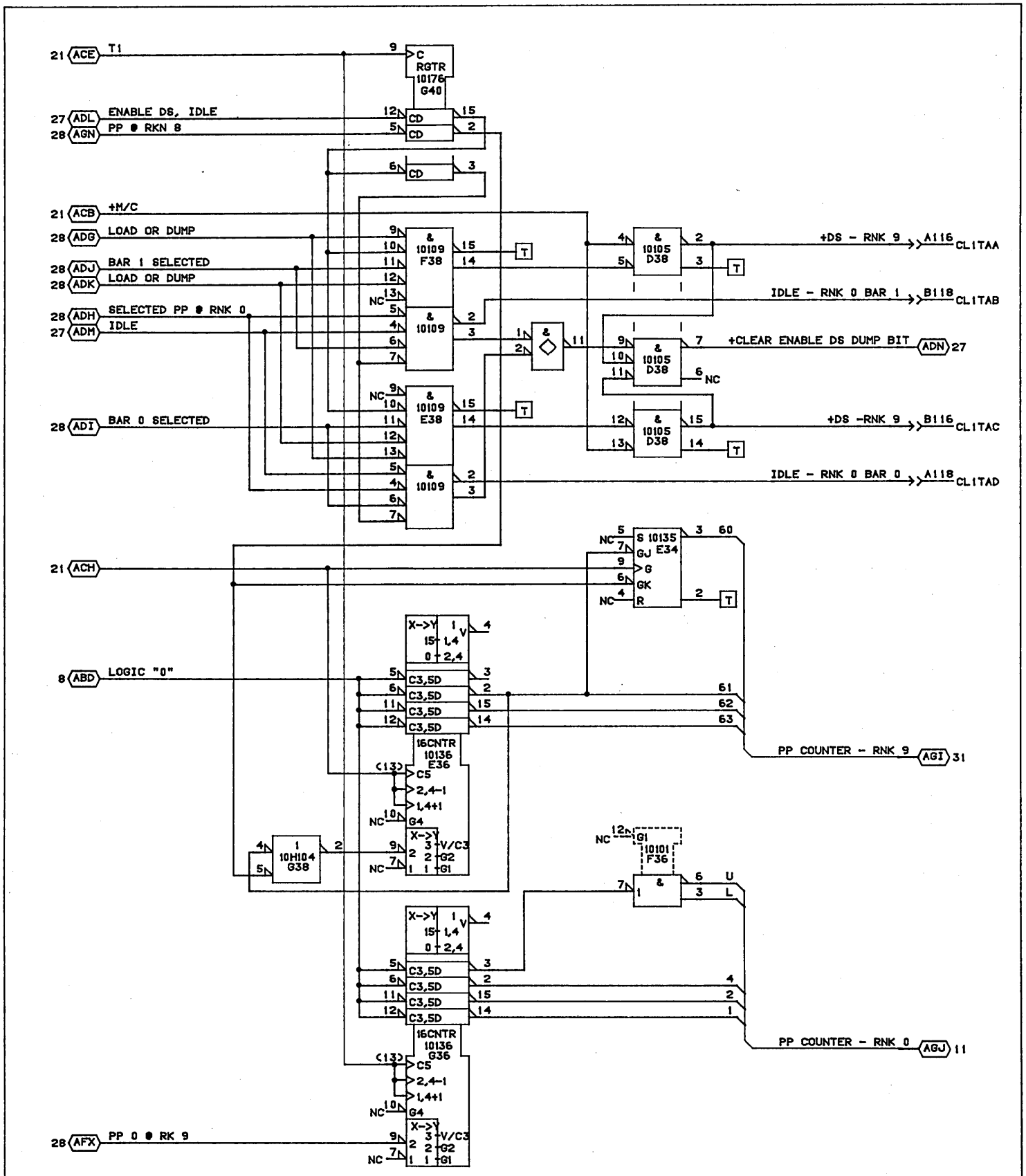

CONTROL DATA CANADA LTD	MODULE ASSEMBLY - 210 PAK TYPE: 1CL0	C		A
		11-APR-85	SHEET 29	

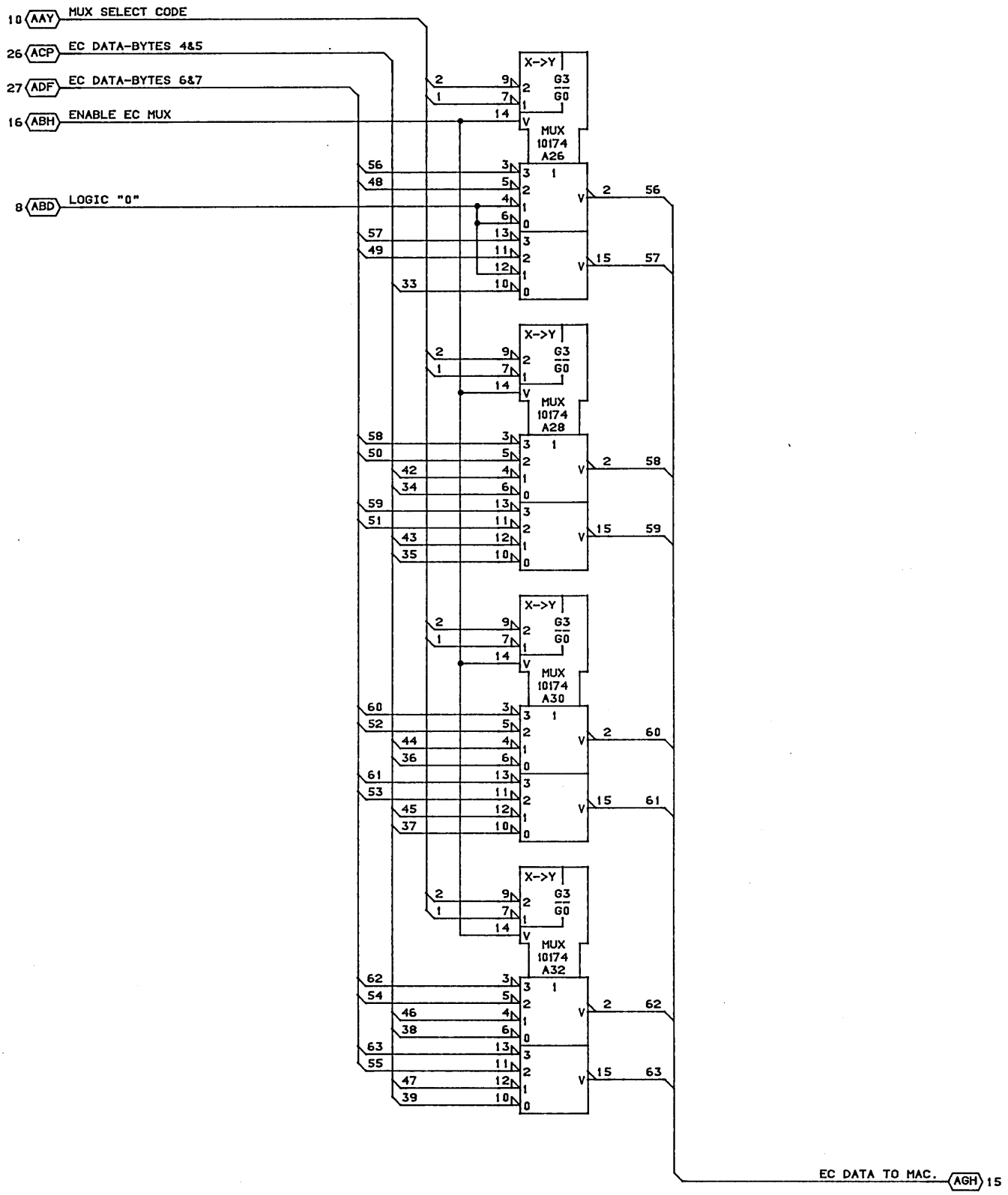

CONTROL DATA CANADA LTD	ENVIRONMENT CONTROL READ MUX MODULE ASSEMBLY-210 PAK TYPE: 1CL0	C		A
		14-JAN-85	SHEET 30	LOC D06

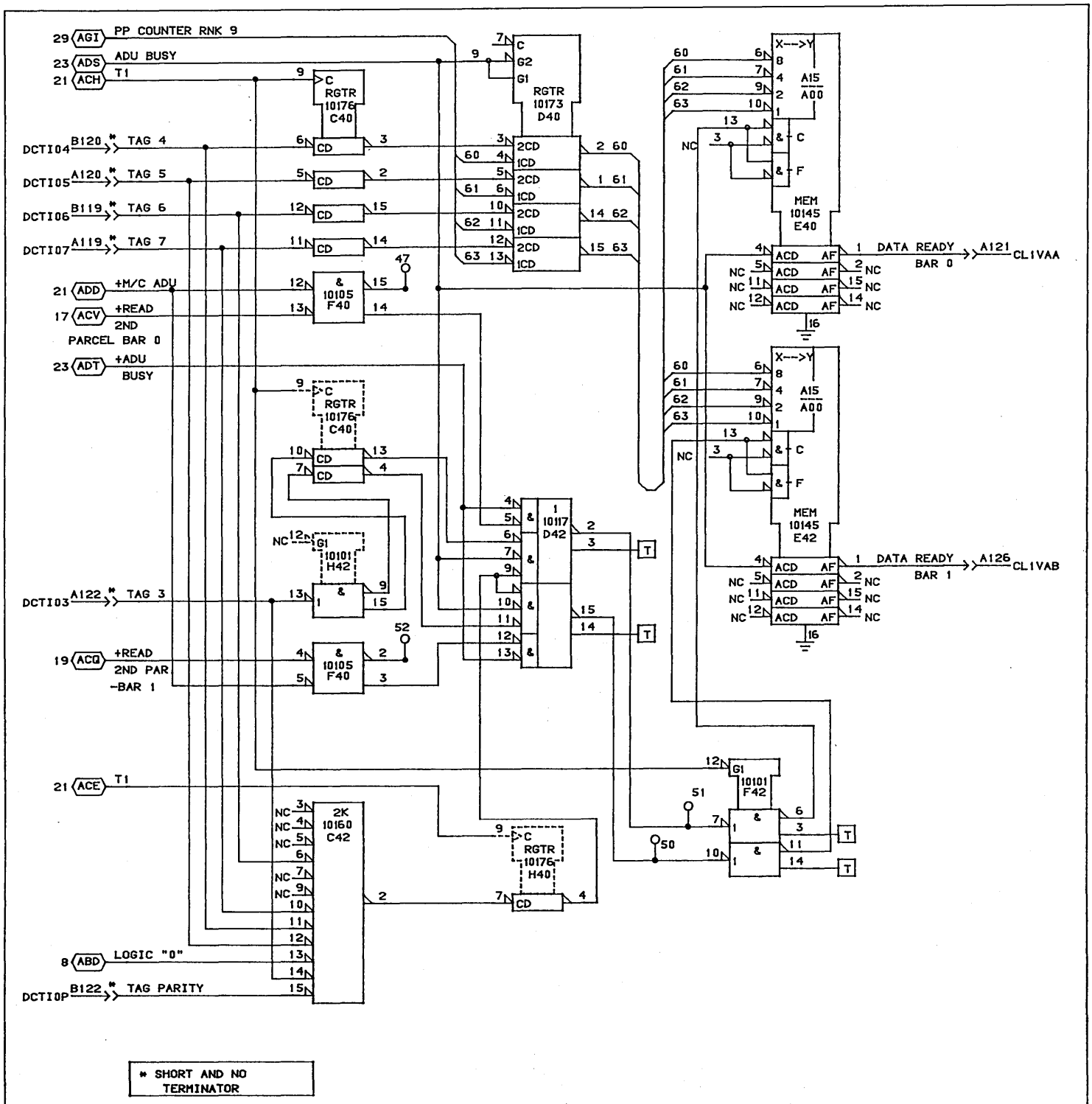

CONTROL DATA CANADA LTD	DATA READY RAMS MODULE ASSEMBLY-210 PAK TYPE: 1CL0	C		A
		30-APR-85	SHEET 31	

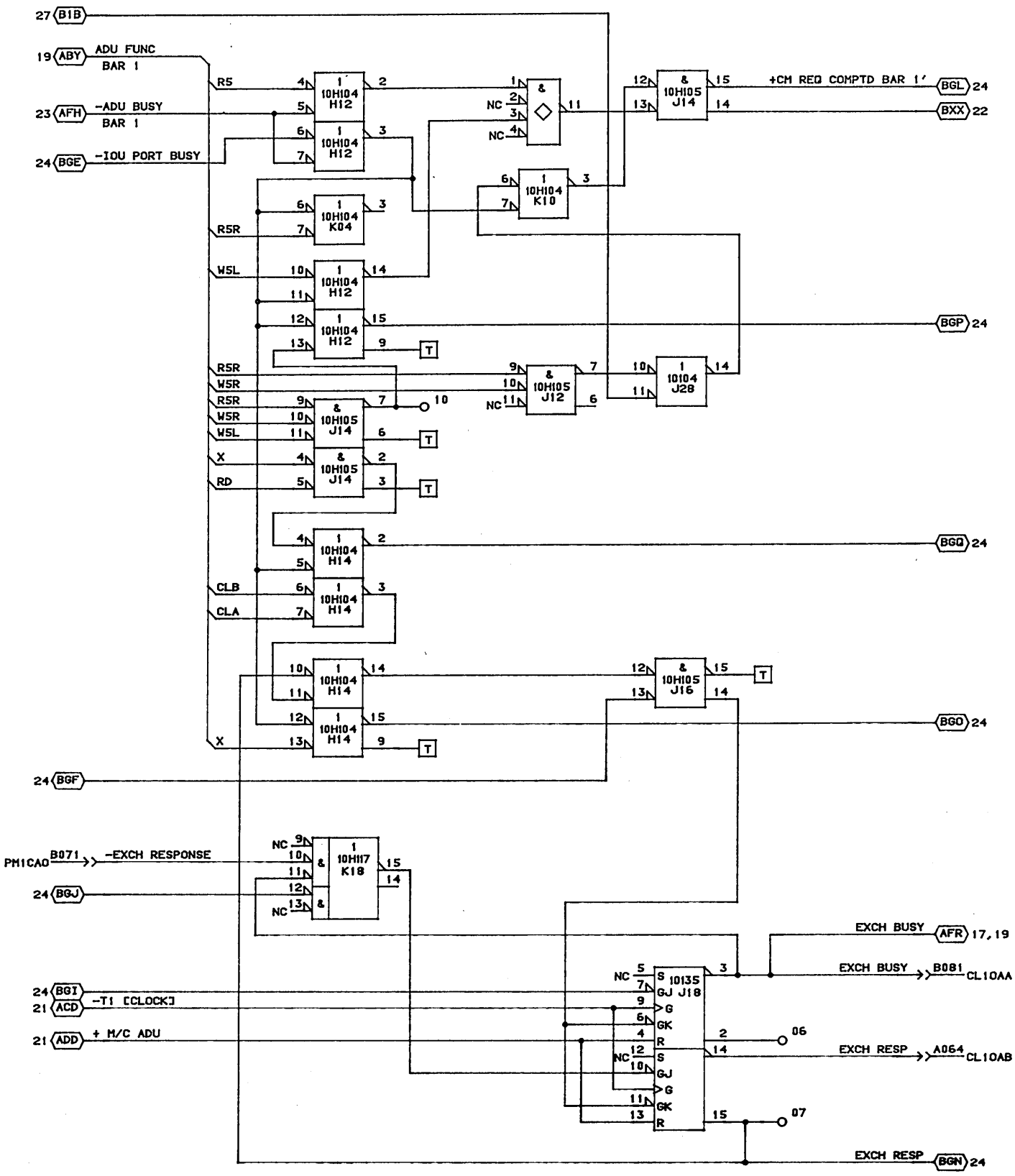

CONTROL DATA CANADA LTD	ADU CONTROLS MODULE ASSY:210 PAK TYPE: 1CL0	C		A
		19-APR-85	SHEET 32	

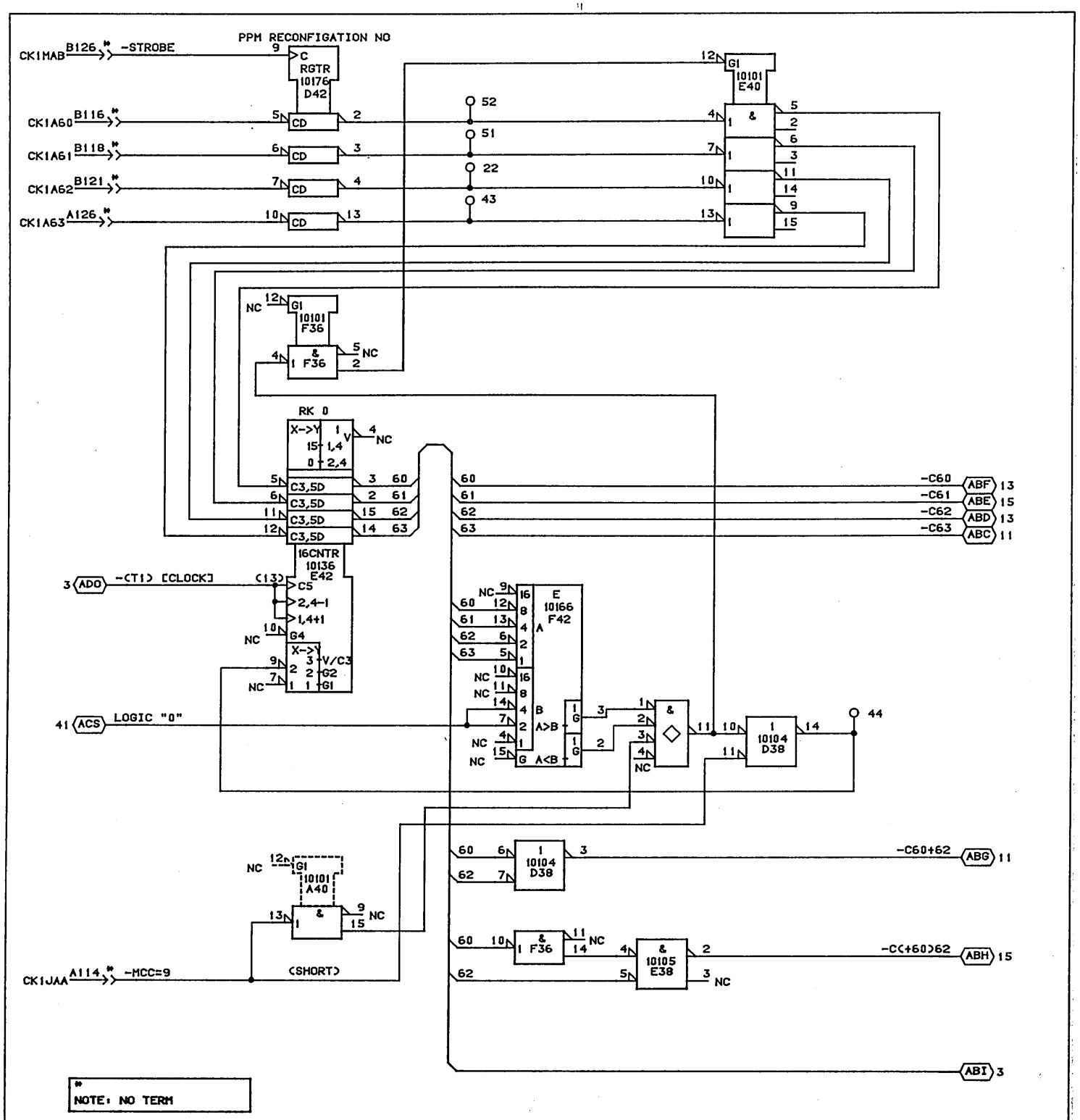

CONTROL DATA CANADA LTD	PPM COUNTER MODULE ASSY:210 PAK TYPE: 1CM0	C		A
		17-APR-85	SHEET 02	

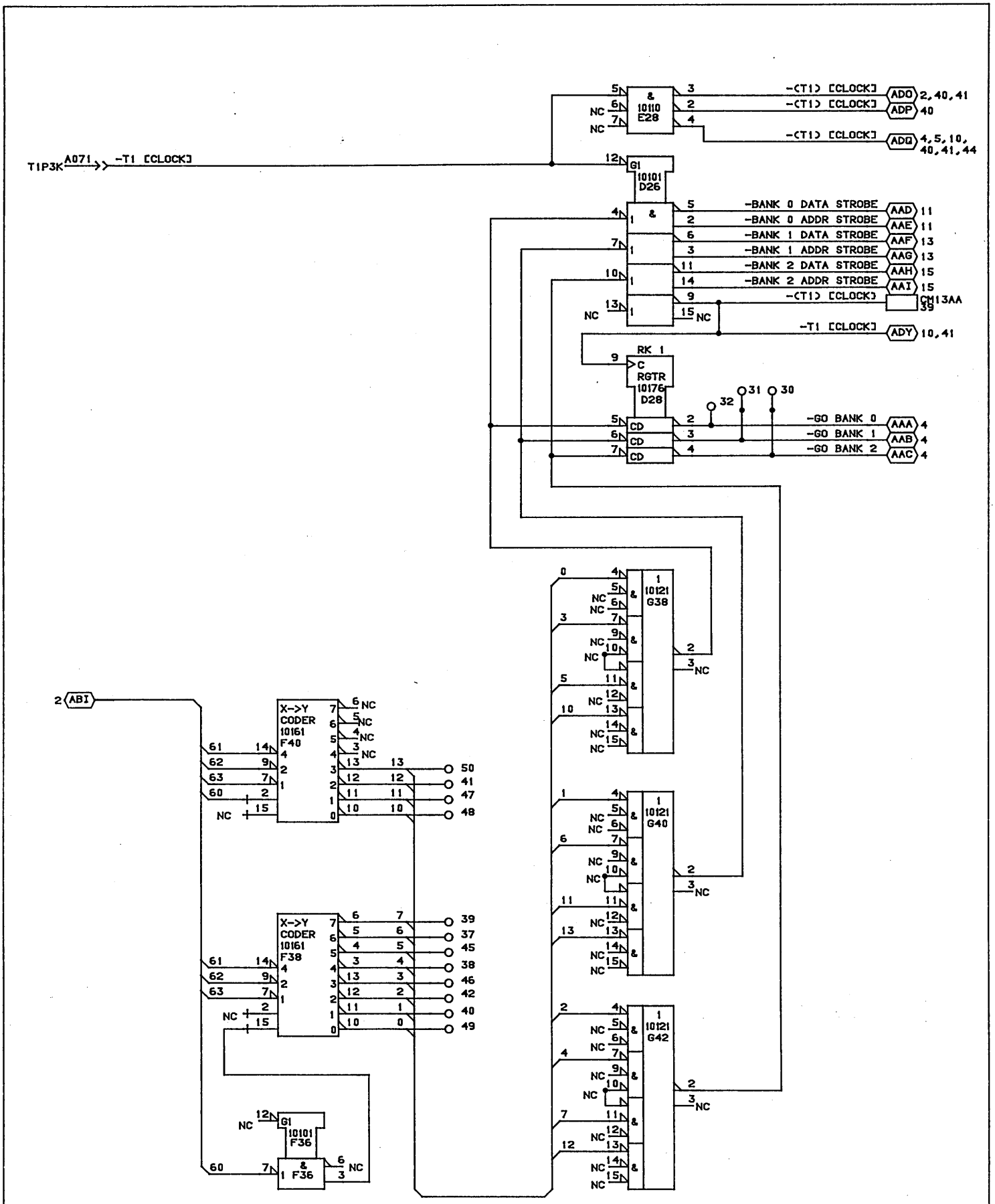

CONTROL DATA CANADA LTD	BANK ACTIVE DECODE MODULE ASSY:210 PAK TYPE: 1CMO	C		A
		16-APR-85	SHEET 03	LOC D18

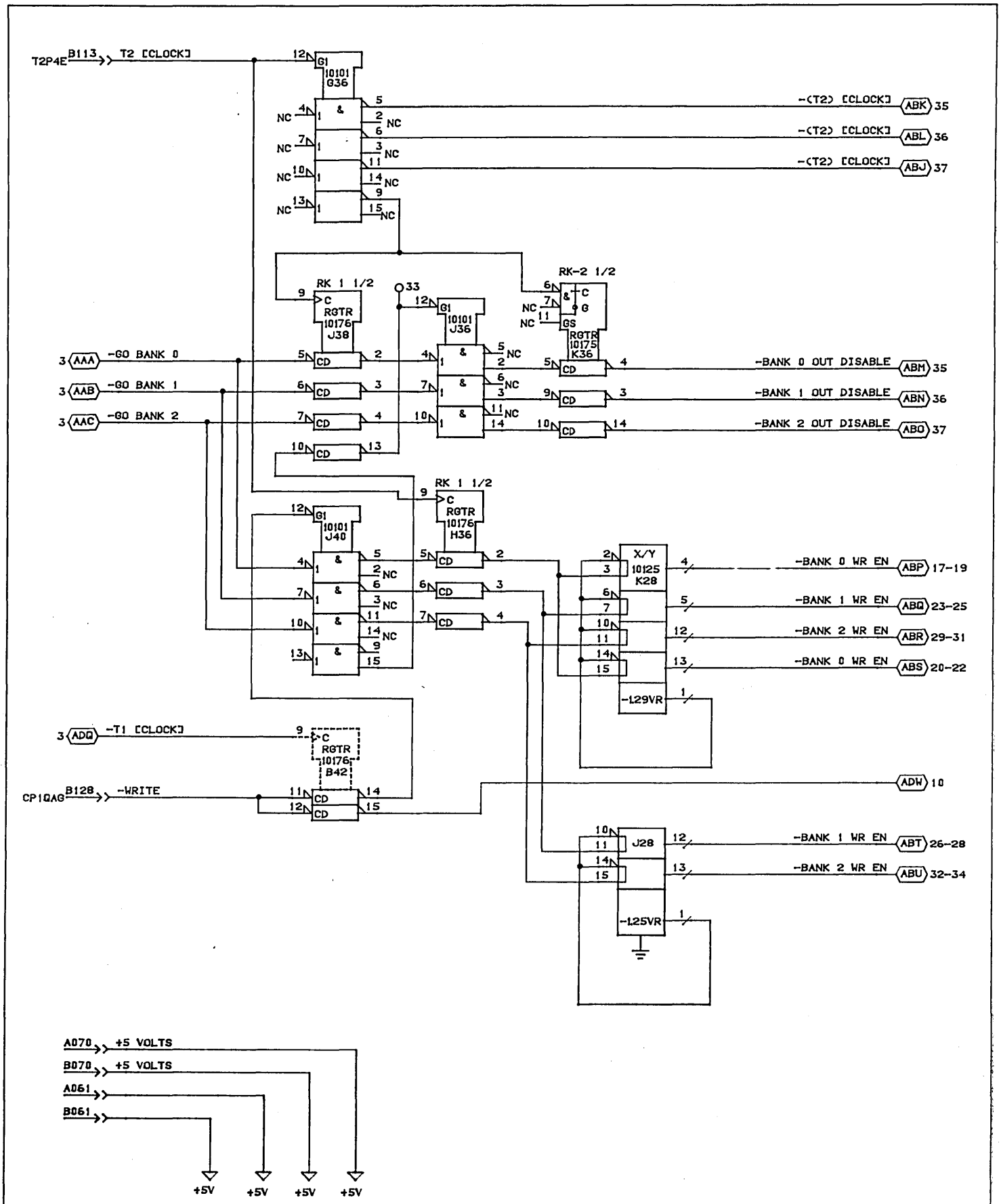

CONTROL DATA CANADA LTD	BANK WRITE ENABLE MODULE ASSY:210 PAK TYPE: 1CM0	C		A
		15-APR-85	SHEET 04	LOC D18

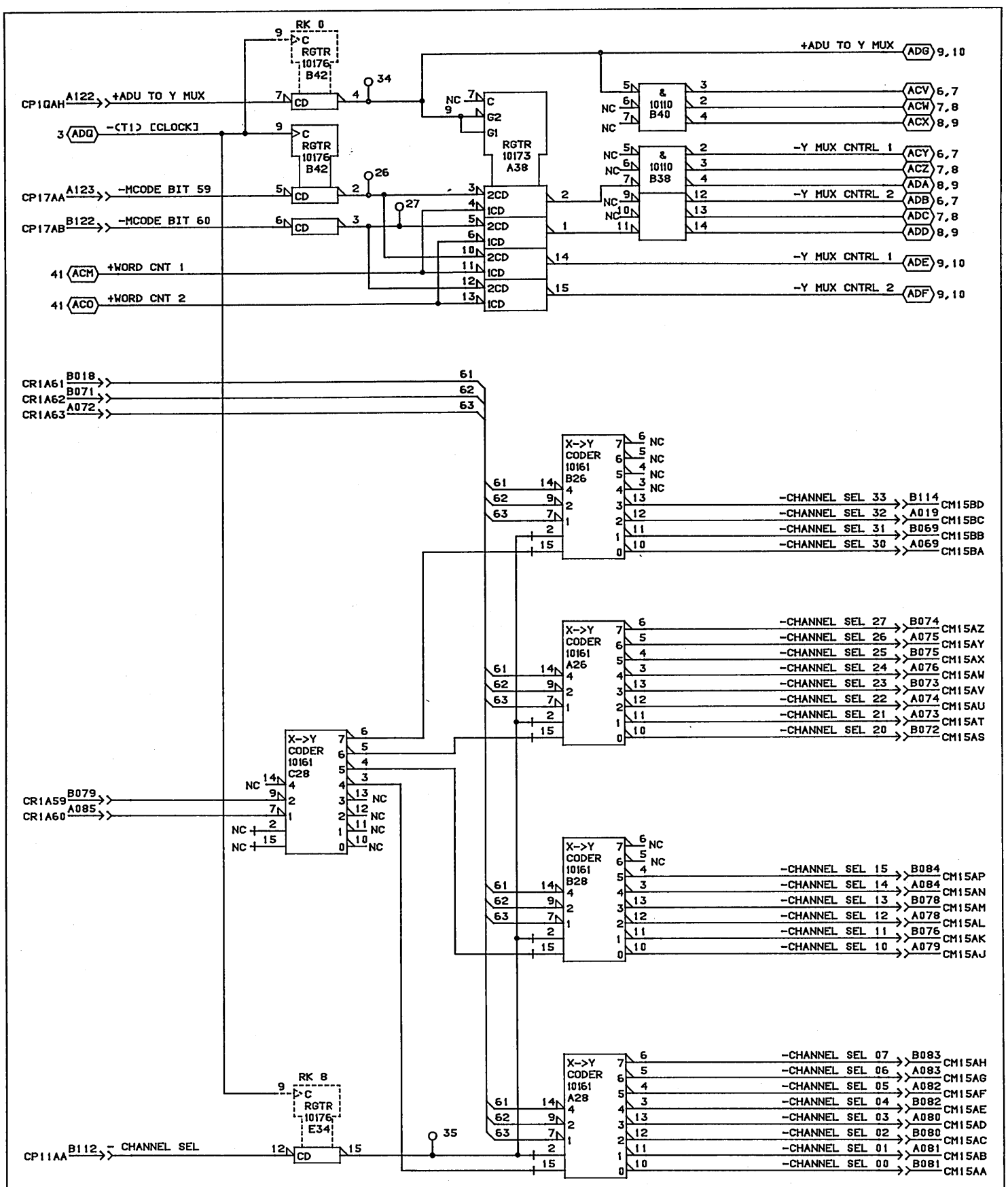

CONTROL DATA CANADA LTD	Y MUX CONTROL CHANNEL SELECT DECODE MODULE ASSY:210 PAK TYPE: 1CM0	C		A
		16-APR-85	SHEET 05	LOC D18

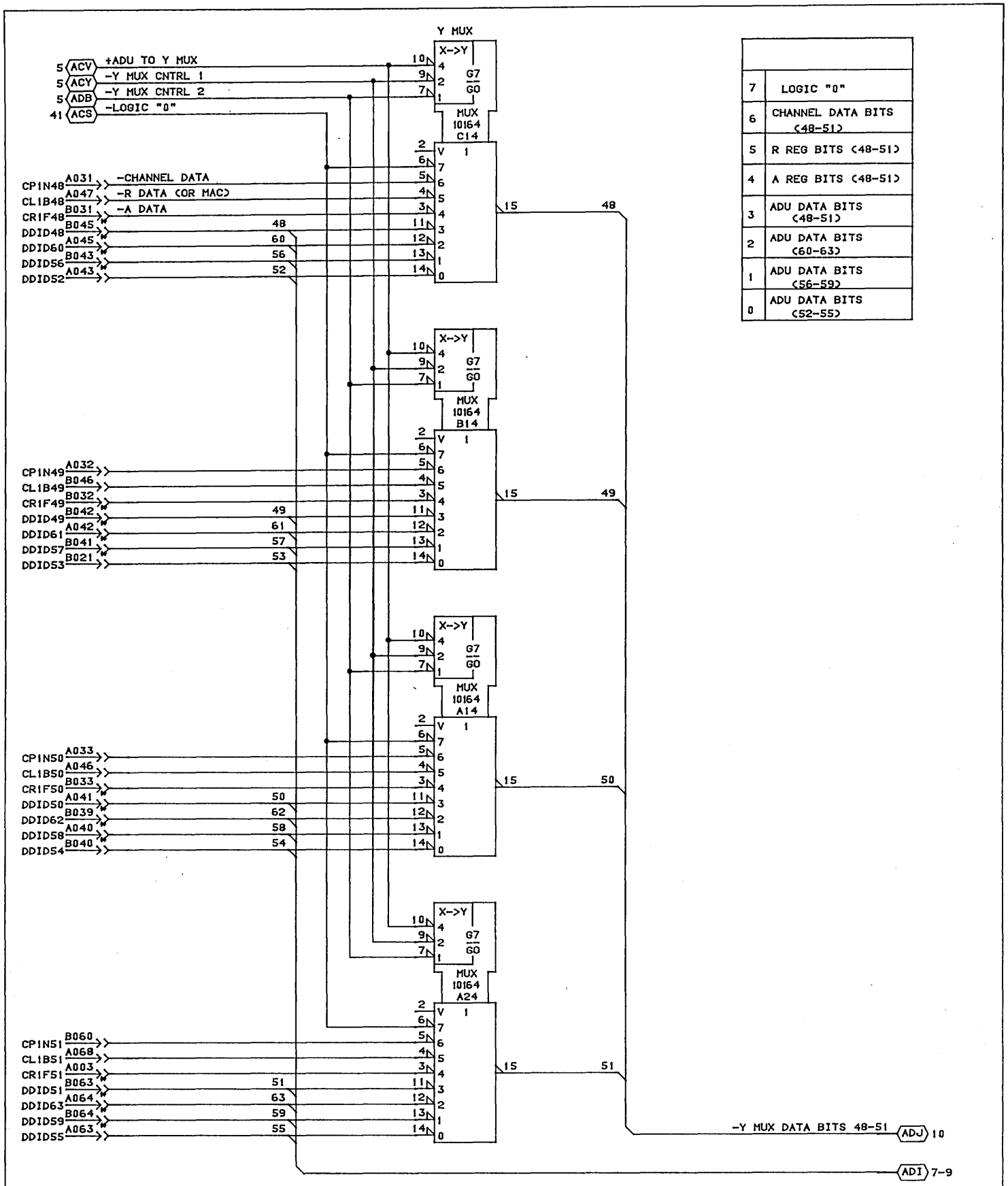

7	LOGIC "0"
6	CHANNEL DATA BITS (48-51)
5	R REG BITS (48-51)
4	A REG BITS (48-51)
3	ADU DATA BITS (48-51)
2	ADU DATA BITS (60-63)
1	ADU DATA BITS (56-59)
0	ADU DATA BITS (52-55)

* NOTE: NO TERM AND SHORT

CONTROL DATA CANADA LTD	Y MUX BITS 48-51 MODULE ASSY:210 PAK TYPE: 1CM0	C		A
		15-APR-85	SHEET 06	LOC. D18

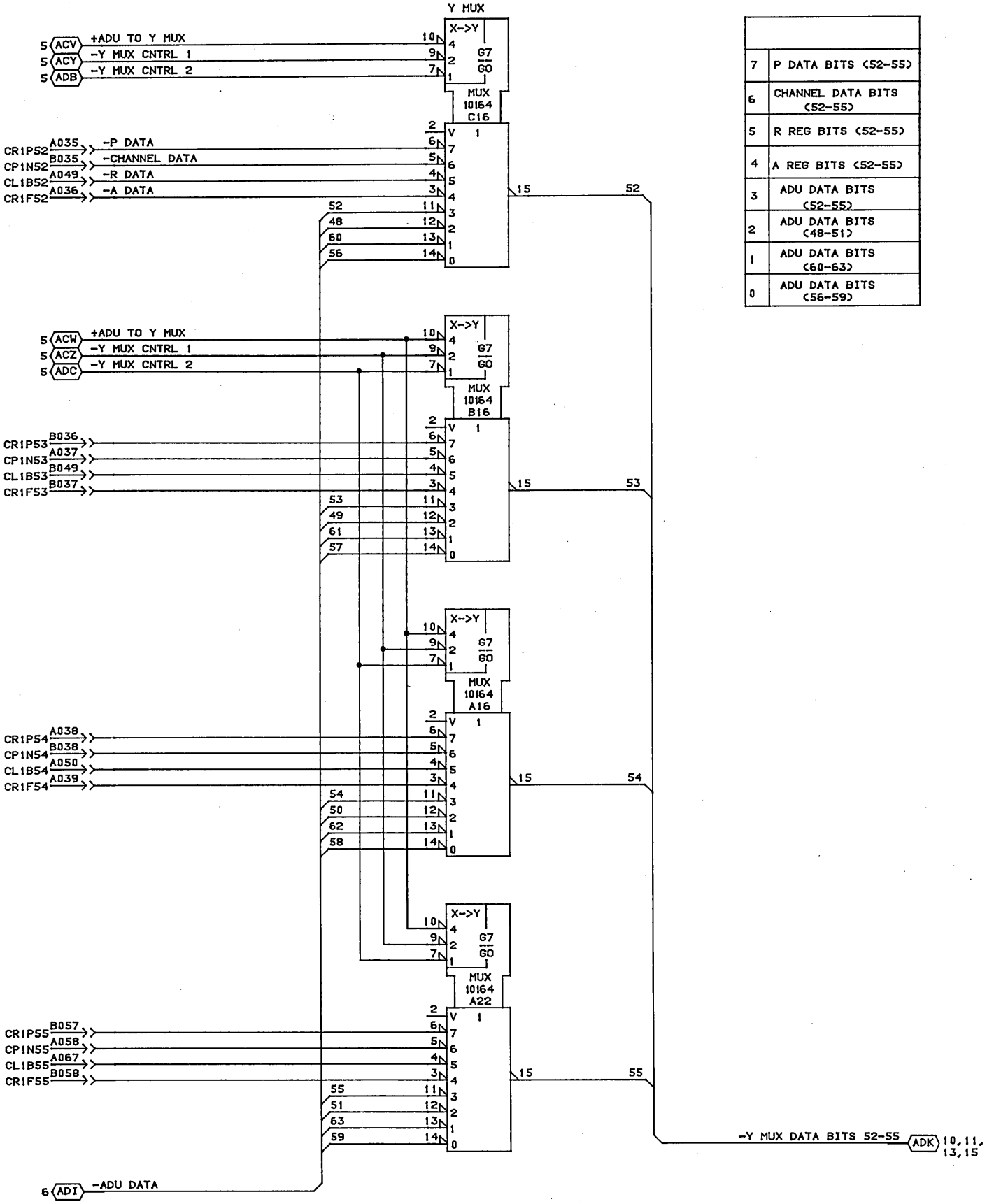

7	P DATA BITS (52-55)
6	CHANNEL DATA BITS (52-55)
5	R REG BITS (52-55)
4	A REG BITS (52-55)
3	ADU DATA BITS (52-55)
2	ADU DATA BITS (48-51)
1	ADU DATA BITS (60-63)
0	ADU DATA BITS (56-59)

CONTROL DATA CANADA LTD	Y MUX BITS 52-55 MODULE ASSY:210 PAK TYPE: 1CM0	C		A
		16-APR-85	SHEET 07	LOC. D18

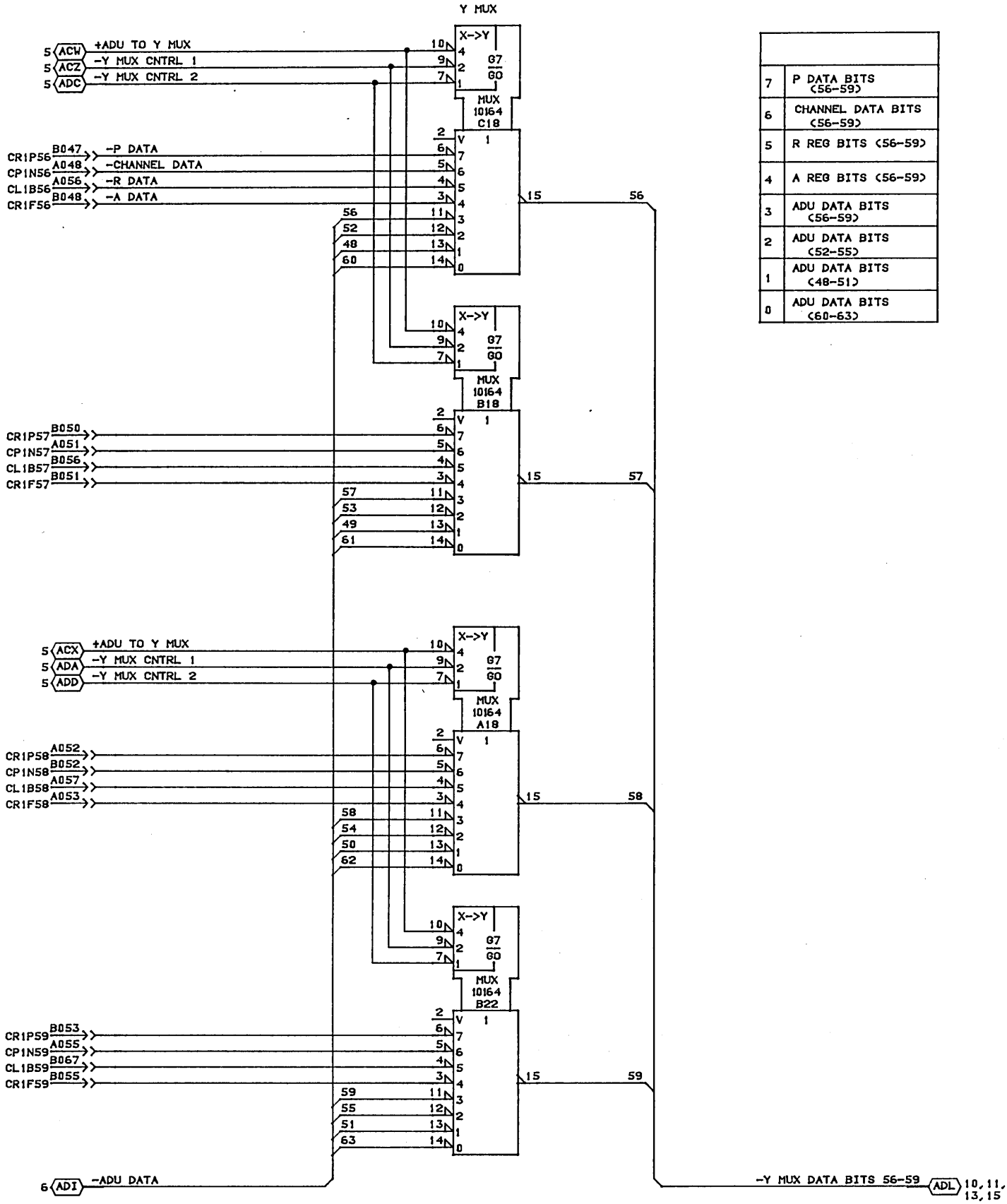

7	P DATA BITS (56-59)
6	CHANNEL DATA BITS (56-59)
5	R REG BITS (56-59)
4	A REG BITS (56-59)
3	ADU DATA BITS (56-59)
2	ADU DATA BITS (52-55)
1	ADU DATA BITS (48-51)
0	ADU DATA BITS (60-63)

CONTROL DATA CANADA LTD	Y MUX BITS 56-59 MODULE ASSY:210 PAK TYPE: 1CM0	C		A
		15-APR-85	SHEET 08	LOC. D18

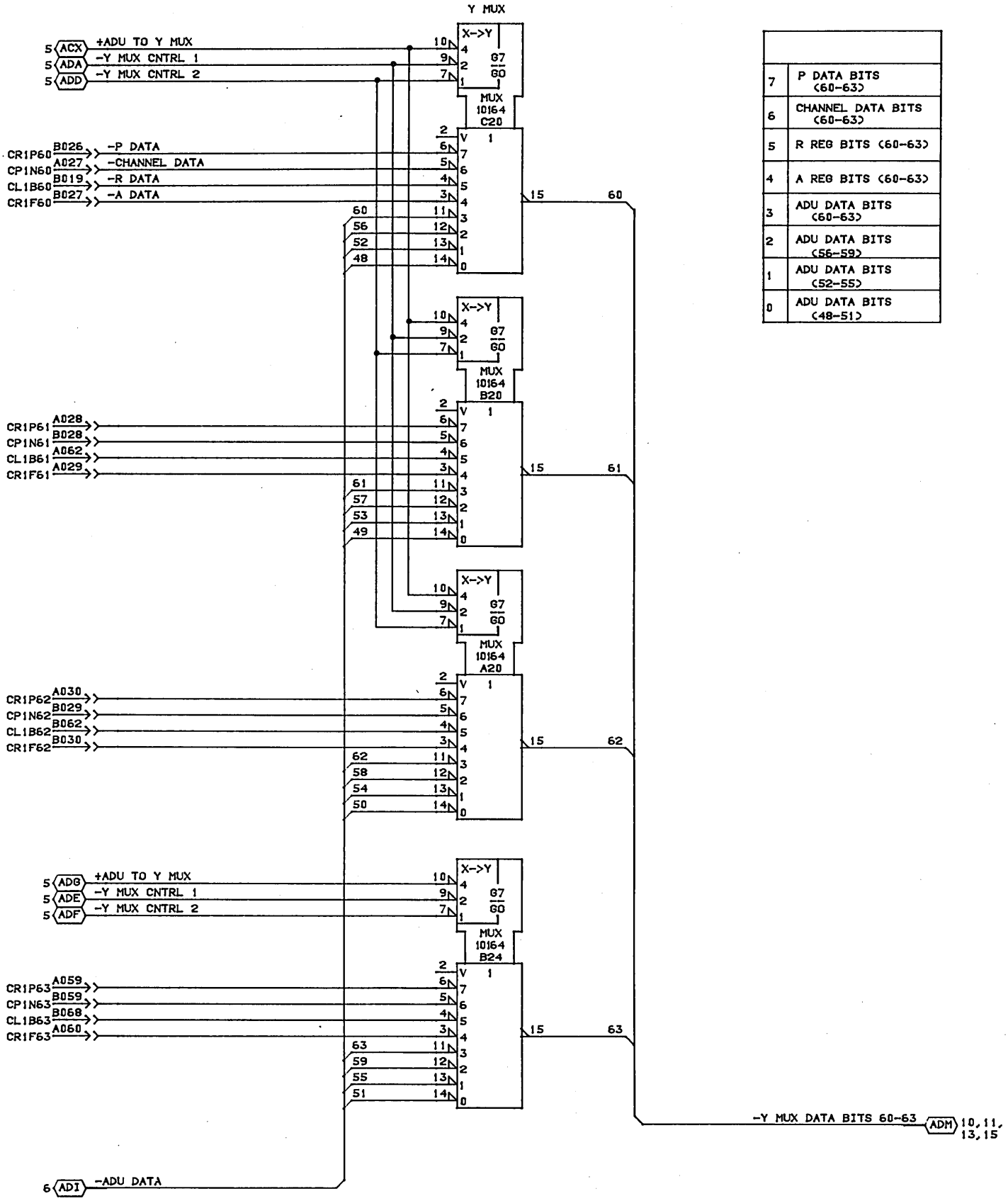

7	P DATA BITS (60-63)
6	CHANNEL DATA BITS (60-63)
5	R REG BITS (60-63)
4	A REG BITS (60-63)
3	ADU DATA BITS (60-63)
2	ADU DATA BITS (56-59)
1	ADU DATA BITS (52-55)
0	ADU DATA BITS (48-51)

CONTROL DATA CANADA LTD	Y MUX BITS 60-63 MODULE ASSY:210 PAK TYPE: 1CM0	C		A
		15-APR-85	SHEET 09	LOC. D18

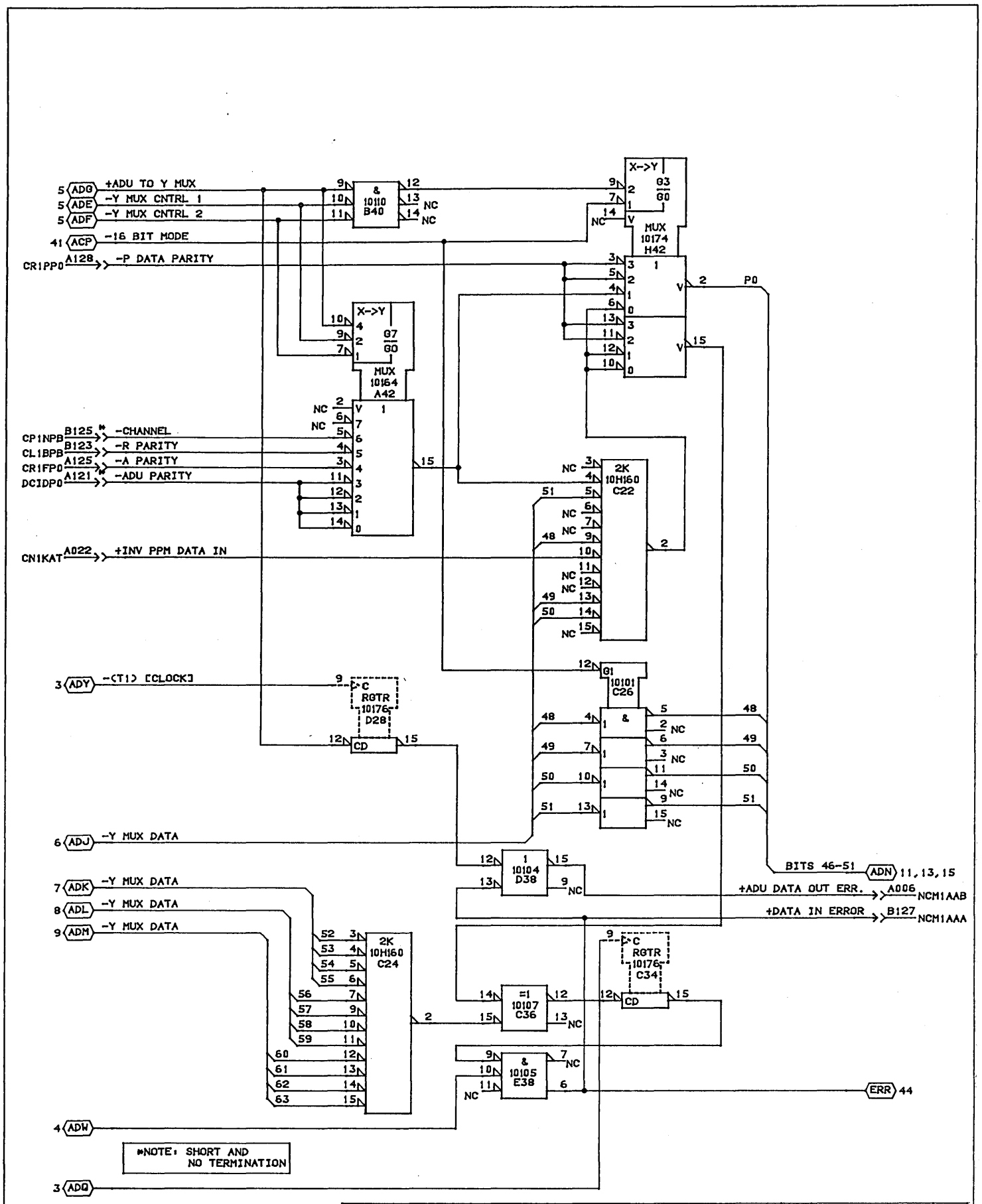

CONTROL DATA CANADA LTD	PPM DATA IN PARITY REGENERATOR/CHECKER MODULE ASSY:210 PAK TYPE: 1CM0	C		A
		15-APR-85	SHEET 10	LOC. D18

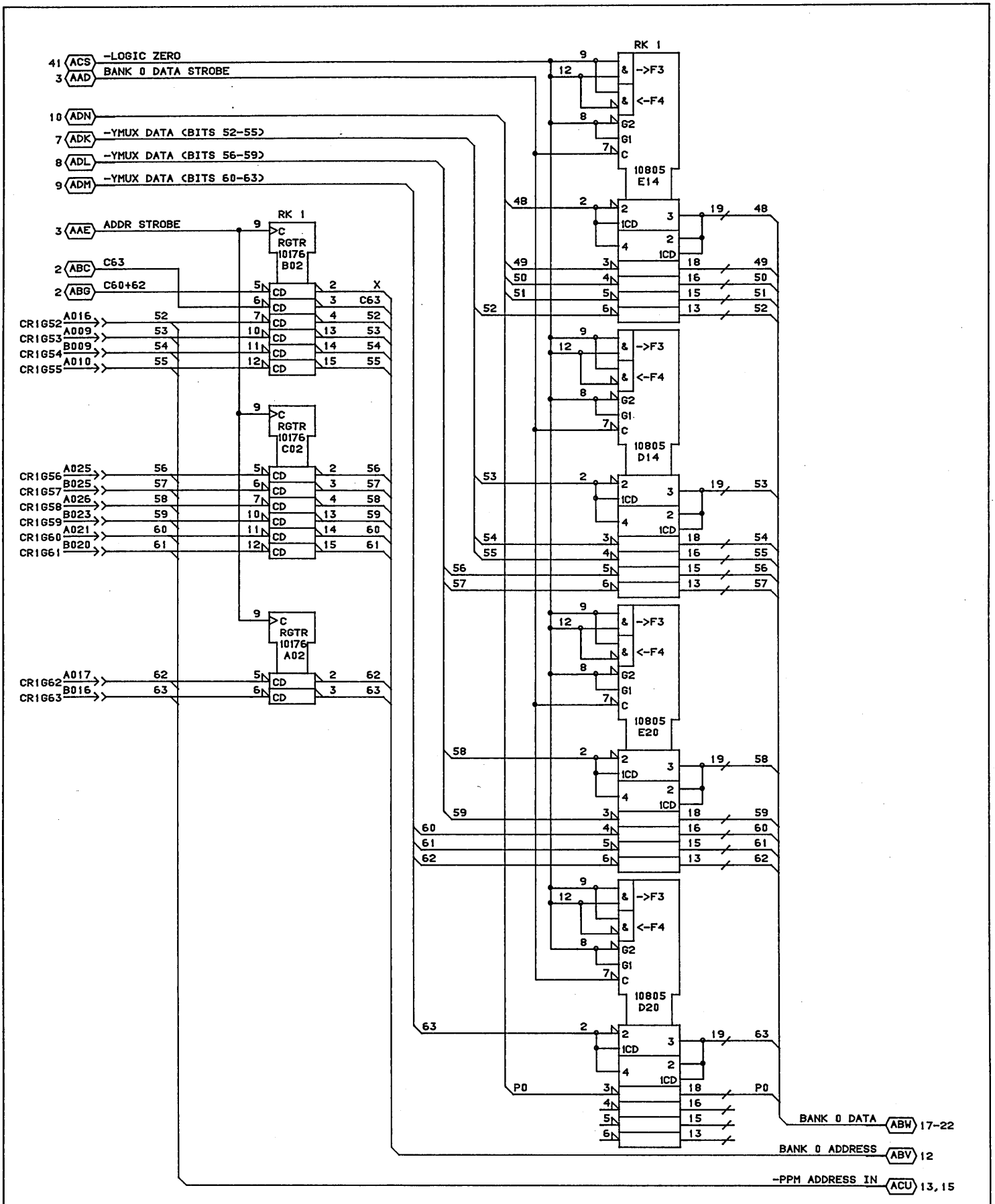

CONTROL DATA CANADA LTD	BANK 0 ADDRESS REG DATA LATCH/TRANSLATION MODULE ASSEMBLY-210 PAK TYPE: 1CM0	C		A
		23-APR-85	SHEET 11	

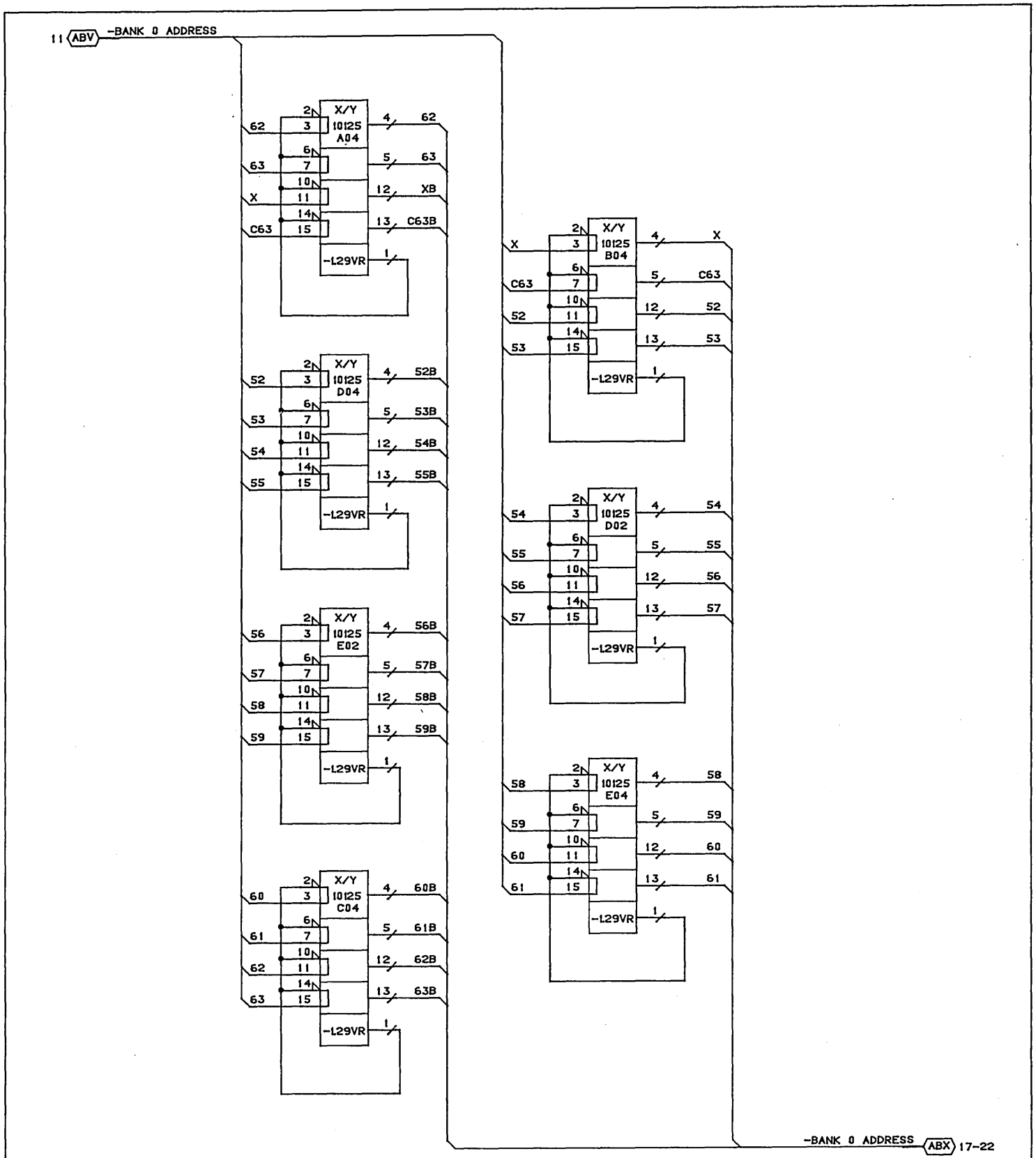

CONTROL DATA CANADA LTD	BANK 0 ADDRESS TRANSLATION MODULE ASSY:210 PAK TYPE: 1CM0	C		A
		15-APR-85	SHEET 12	LOC. D18

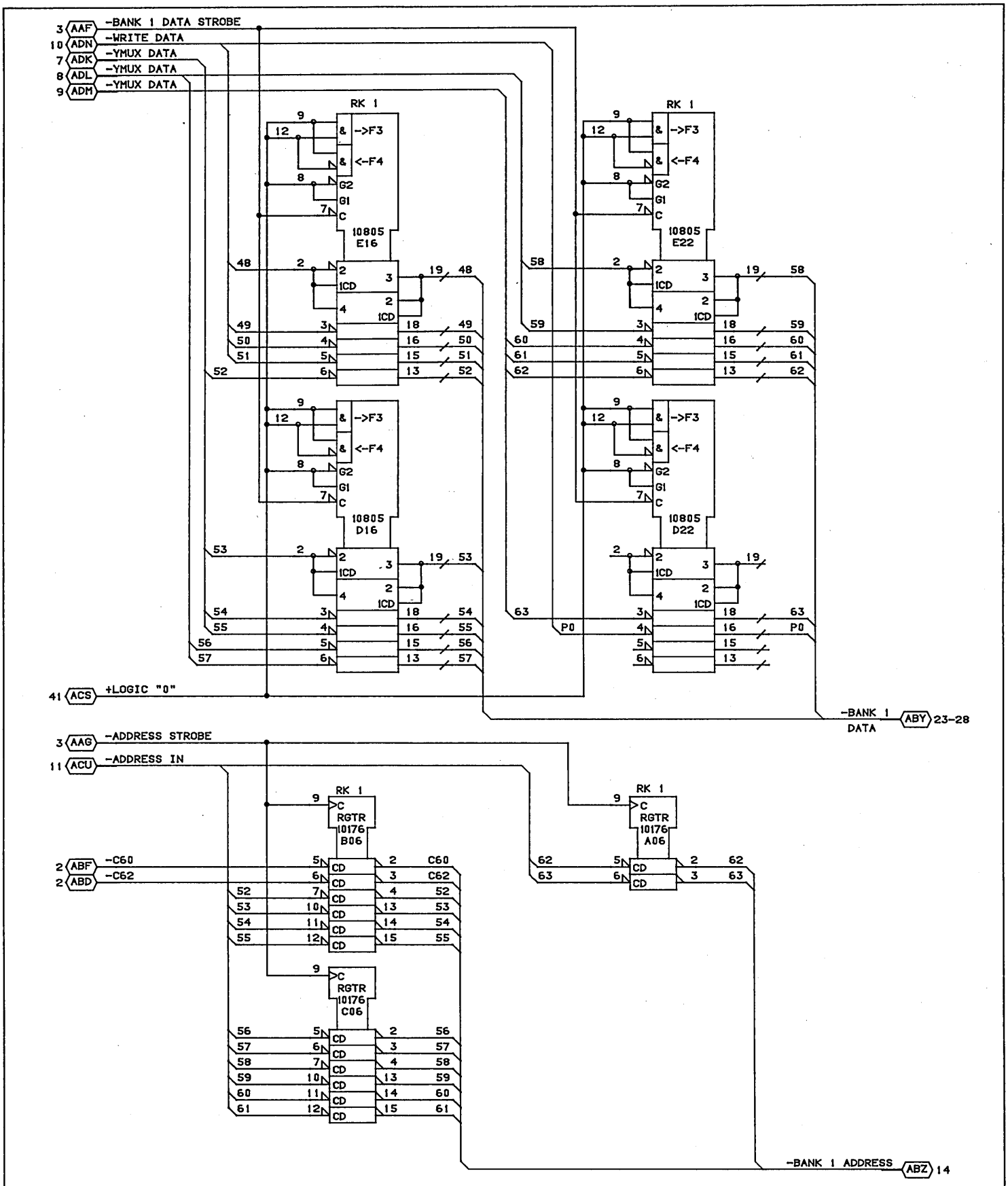

CONTROL DATA CANADA LTD	BANK 1 ADDRESS REG. DATA LATCH/TRANSLATION MODULE ASSY:210 PAK TYPE: 1CM0	C		A
		15-APR-85	SHEET 13	

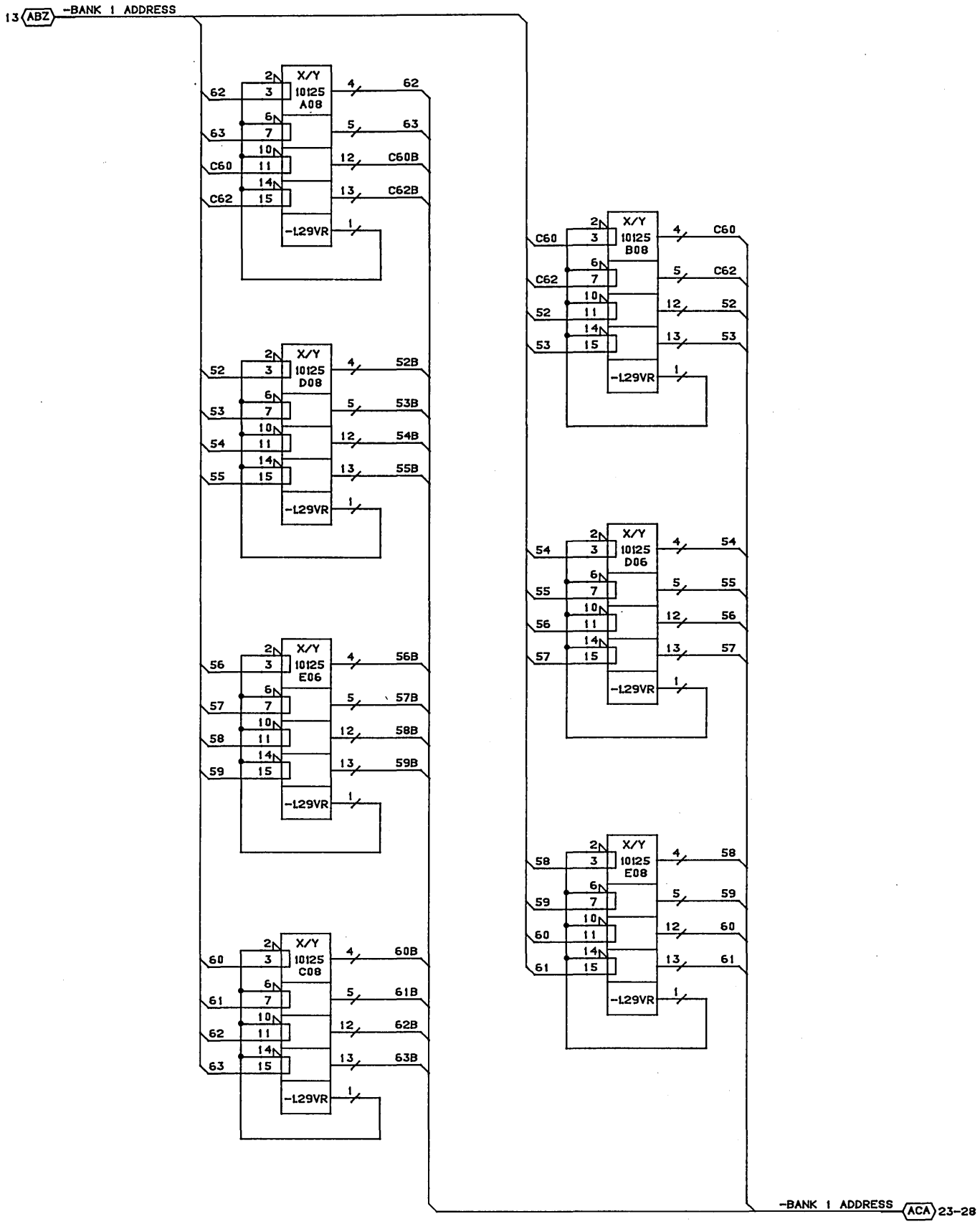

CONTROL DATA CANADA LTD	BANK 1 ADDRESS TRANSLATION MODULE ASSY:210 PAK TYPE: 1CM0	C		A
		16-APR-85	SHEET 14	

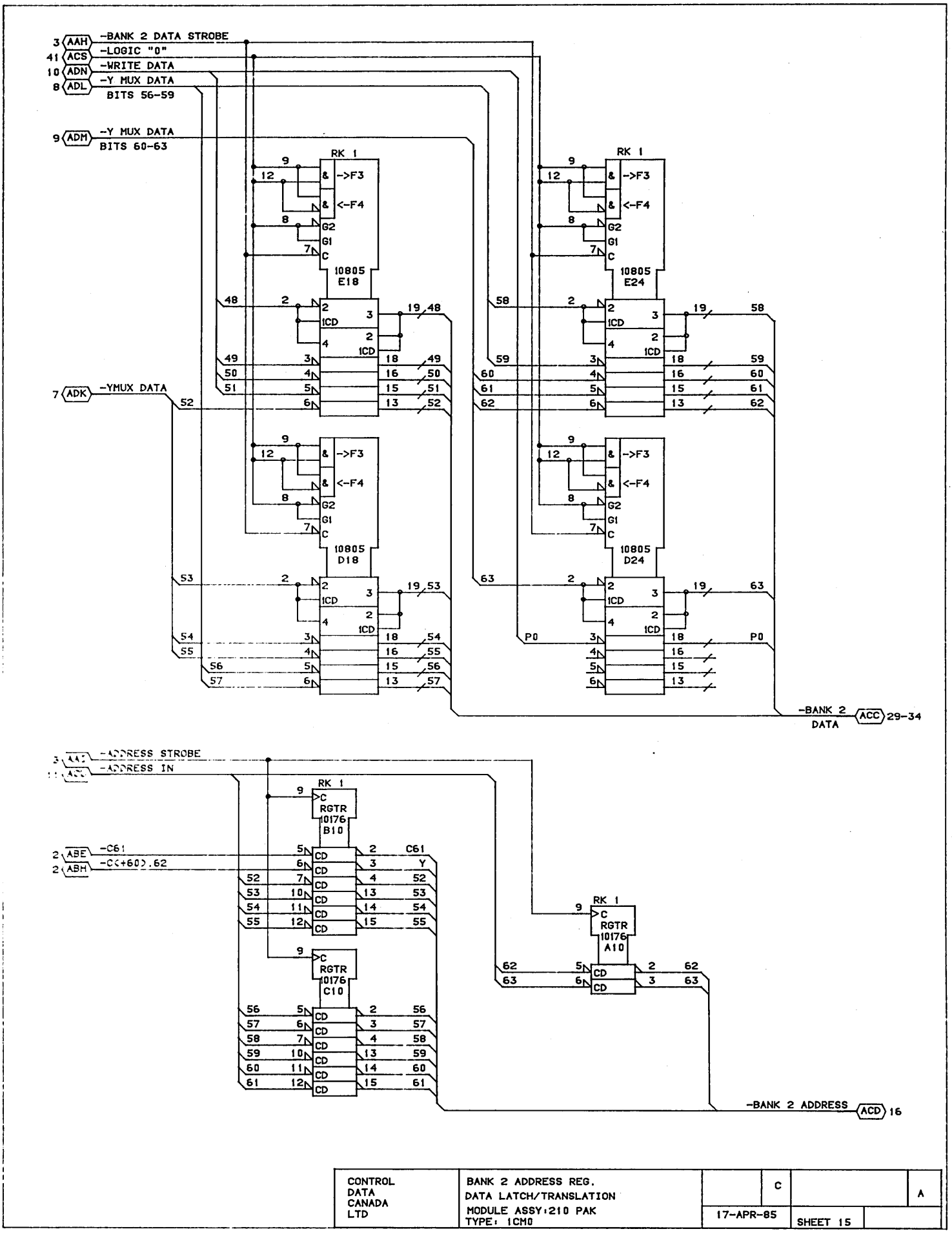

CONTROL DATA CANADA LTD	BANK 2 ADDRESS REG. DATA LATCH/TRANSLATION MODULE ASSY:210 PAK TYPE: 1CM0	C		A
		17-APR-85	SHEET 15	

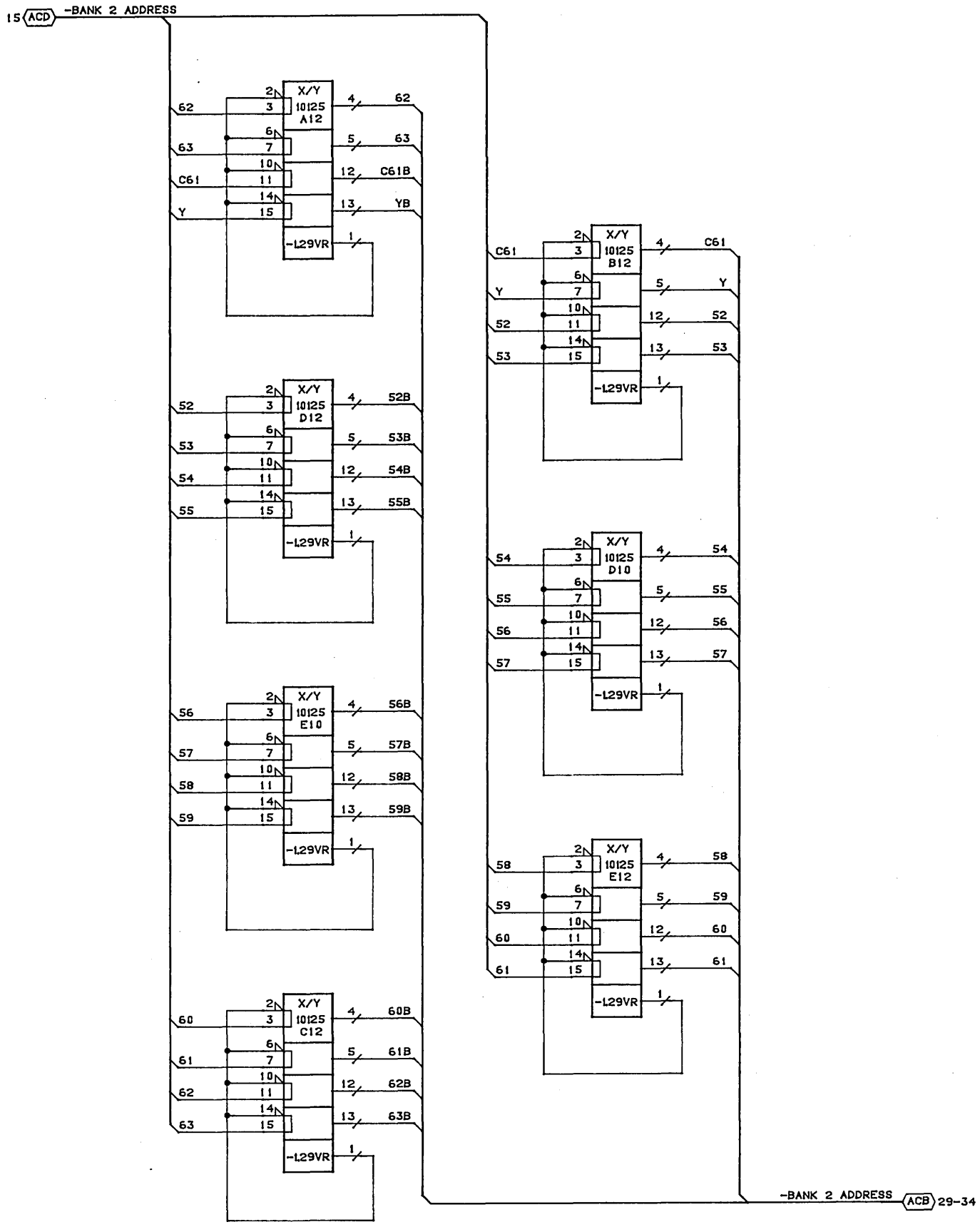

CONTROL DATA CANADA LTD	BANK 2 ADDRESS TRANSLATION MODULE ASSY:210 PAK TYPE: 1CM0	C		A
		17-APR-85	SHEET 16	

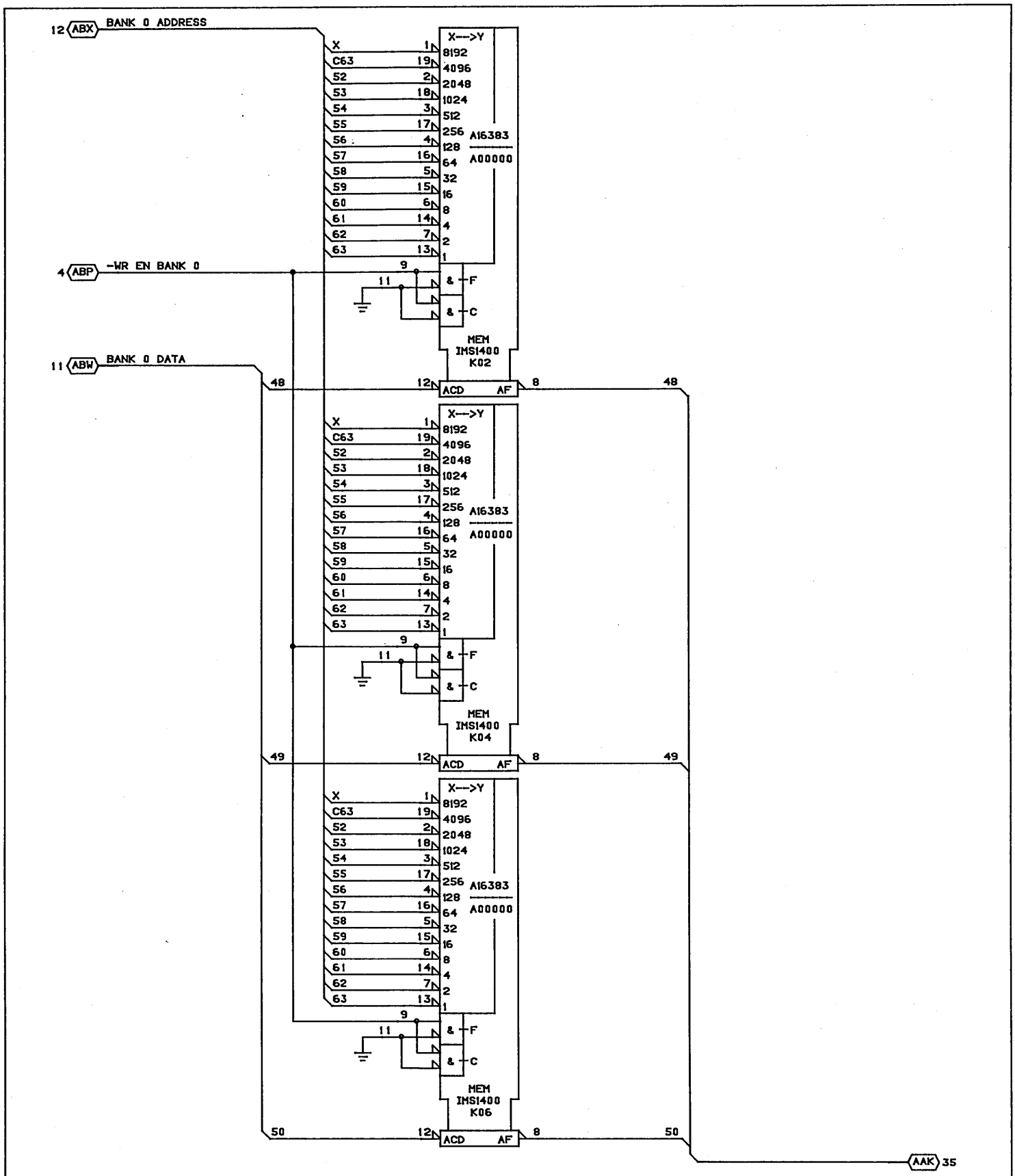

CONTROL DATA CANADA LTD	BANK 0 BITS 48-50 MODULE ASSY 210 PAK TYPE: 1CM0		C	A
		16-APR-85	SHEET 17	

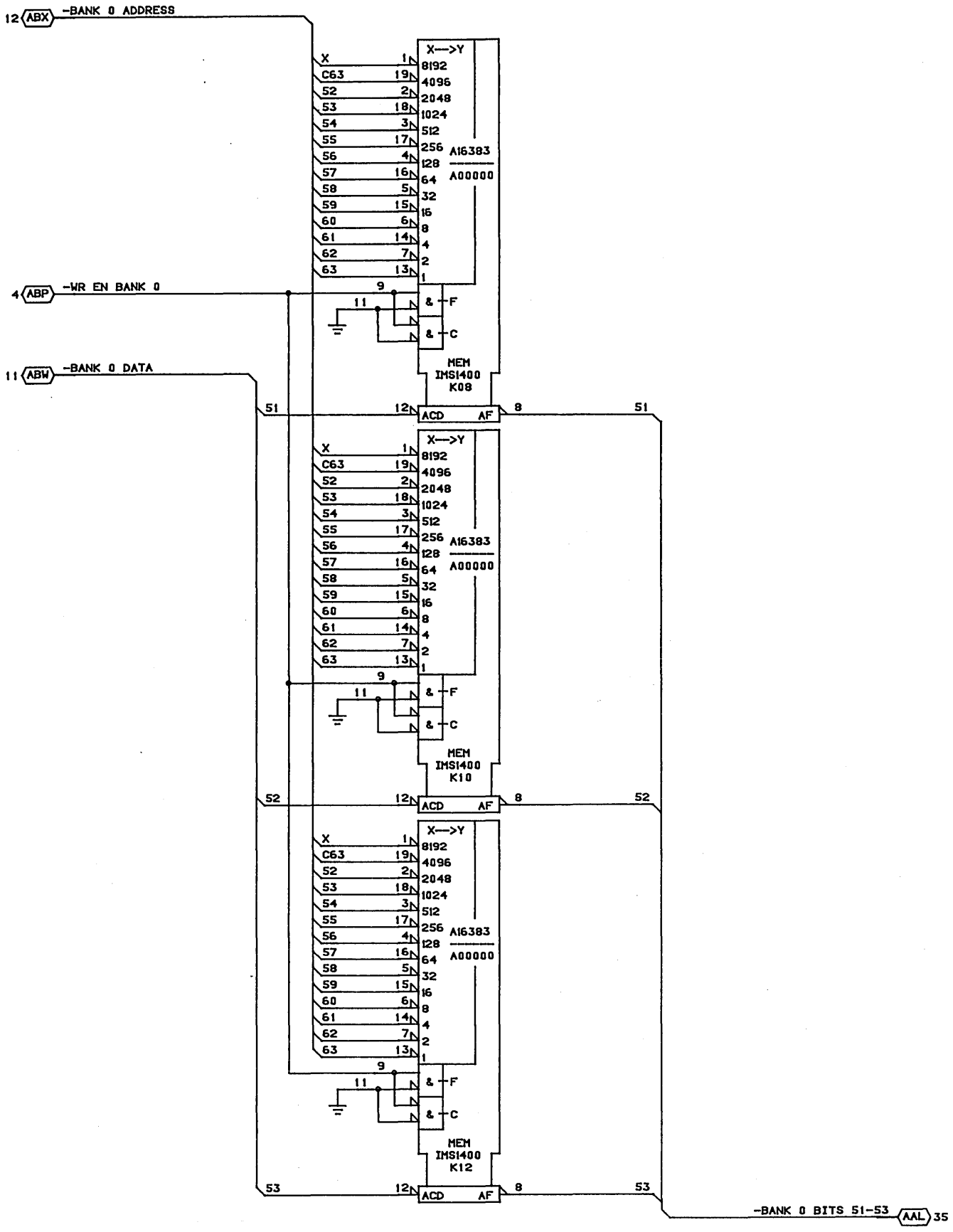

CONTROL DATA CANADA LTD	BANK 0 BITS 51-53 MODULE ASSY:210 PAK TYPE: 1CM0		C	A
		16-APR-85	SHEET 18	

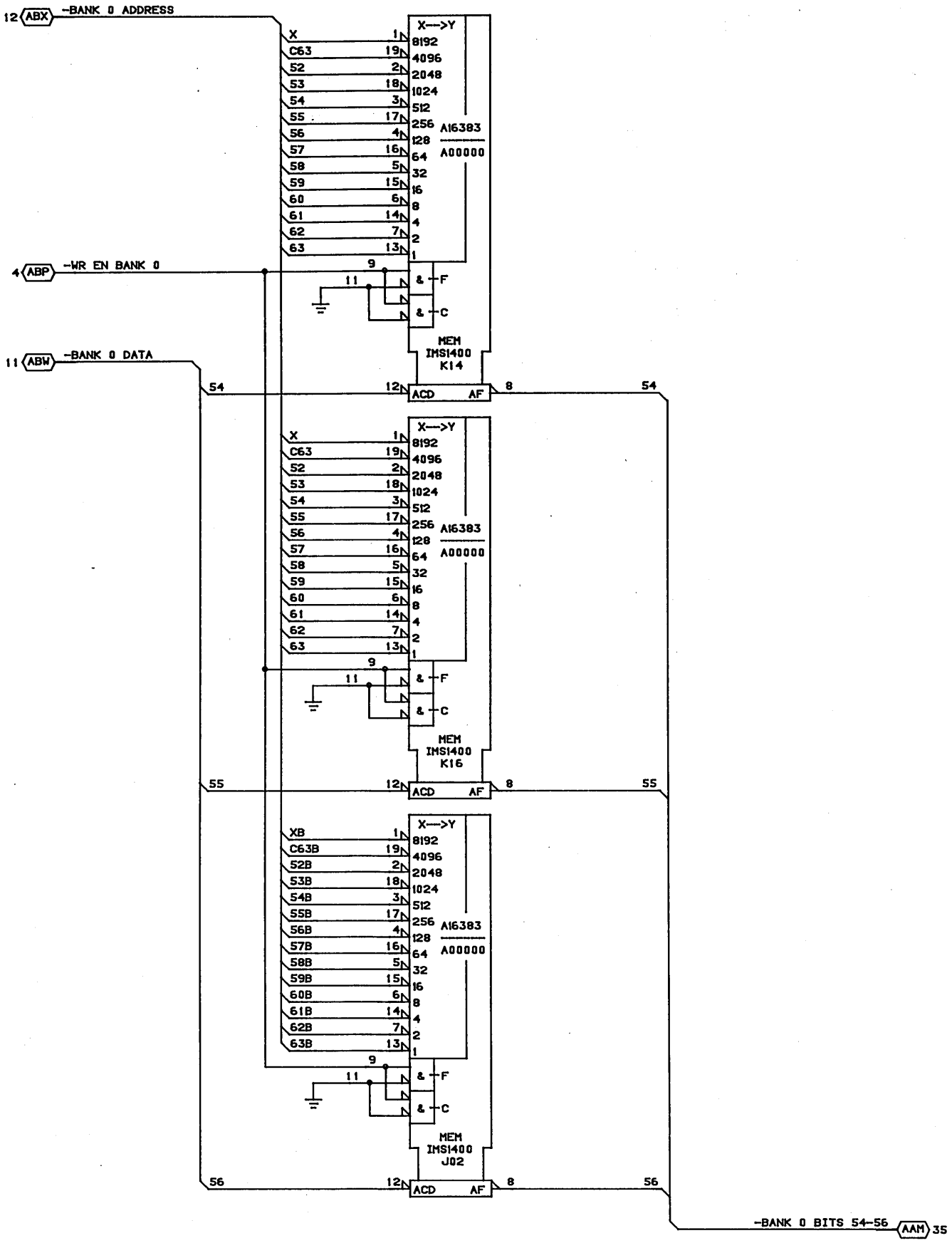

CONTROL DATA CANADA LTD	BANK 0 BITS 54-56 MODULE ASSY:210 PAK TYPE: 1CM0	C		A
		16-APR-85	SHEET 19	

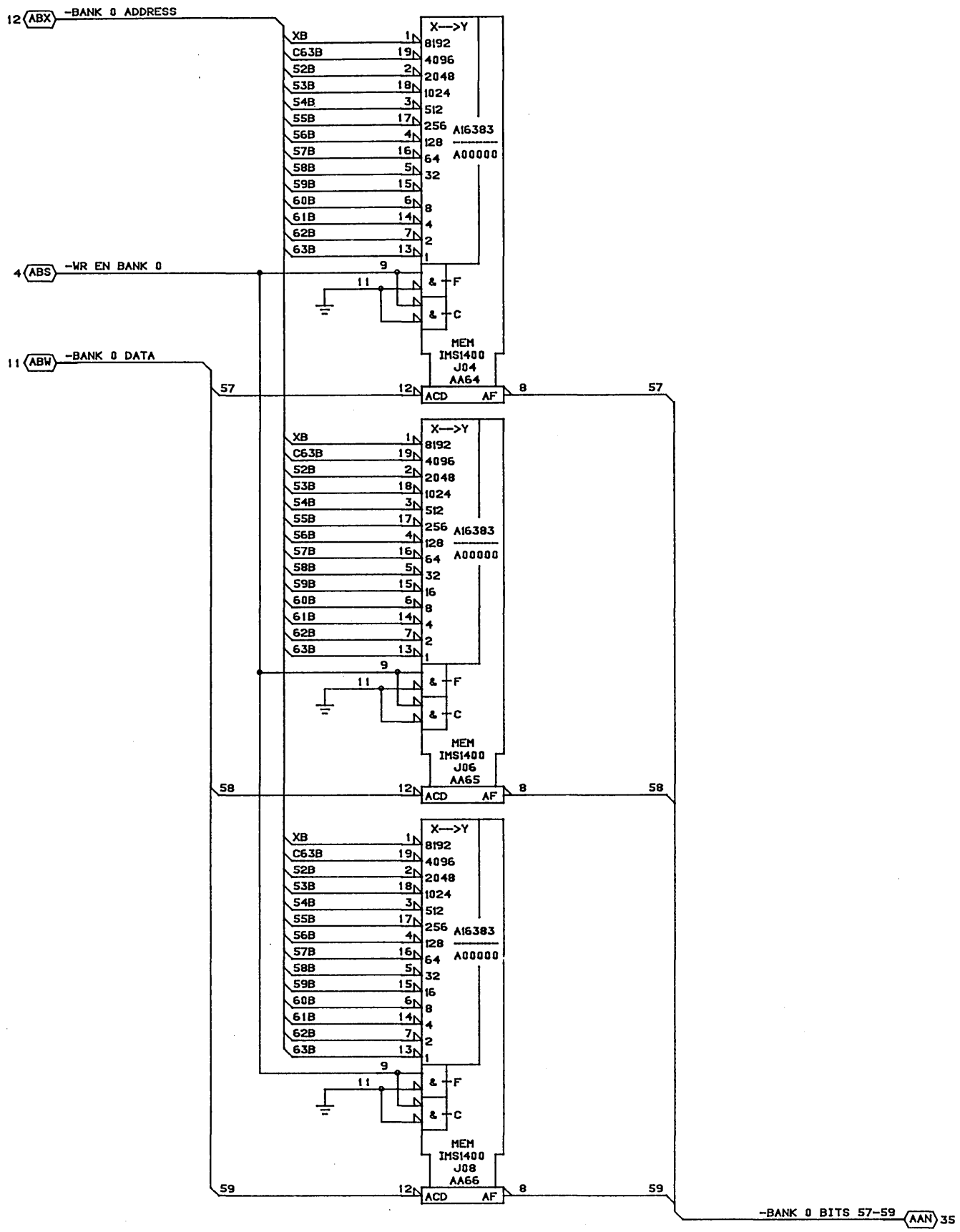

CONTROL DATA CANADA LTD	BANK 0 BITS 57-59 MODULE ASSY:210 PAK TYPE: 1CM0	C		A
		16-APR-85	SHEET 20	

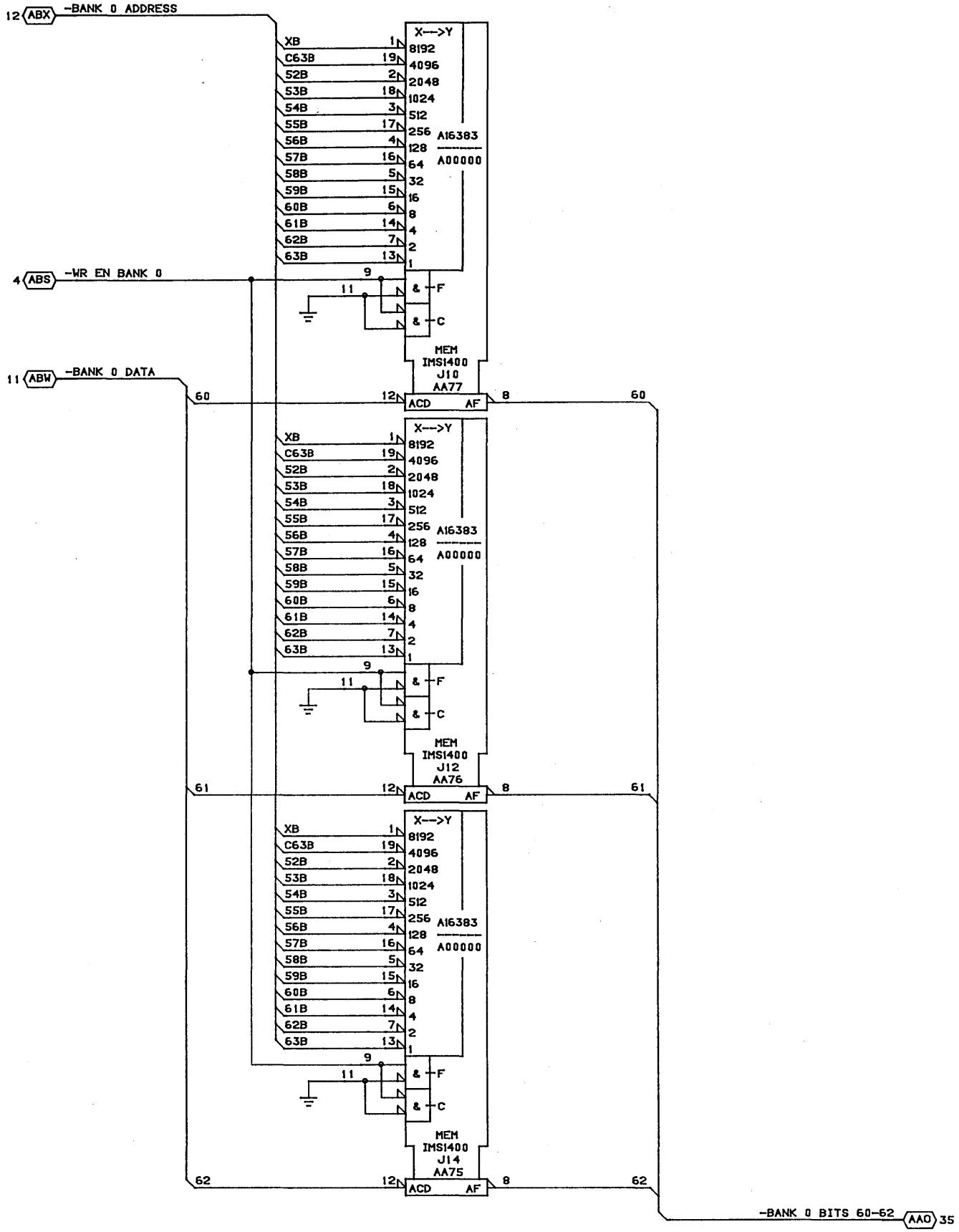

CONTROL DATA CANADA LTD	BANK 0 BITS 60-62 MODULE ASSY:210 PAK TYPE: 1CM0	C		A
		16-APR-85	SHEET 21	

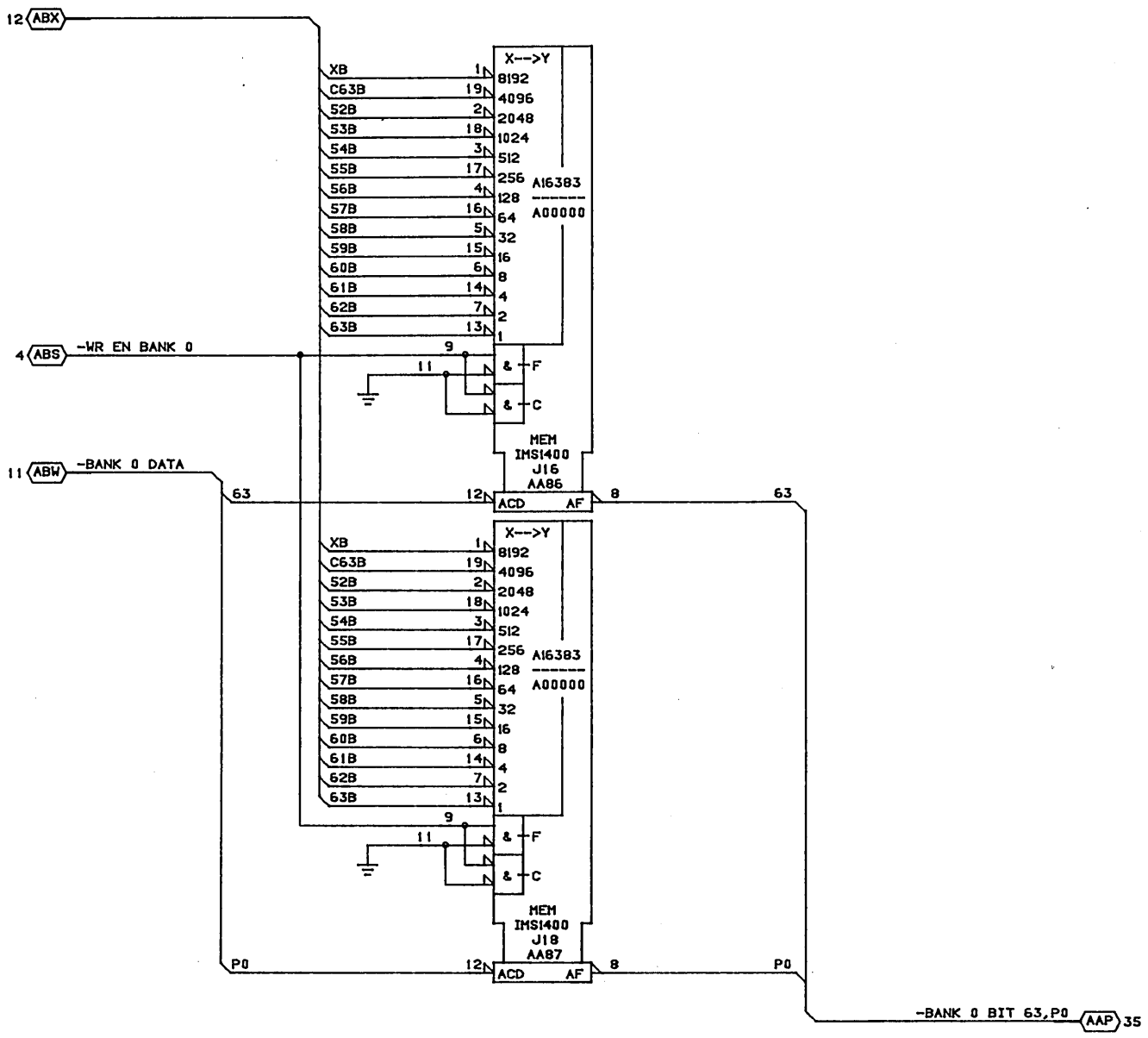

CONTROL DATA CANADA LTD	BANK 0 BIT 63,P0 MODULE ASSY:210 PAK TYPE: 1CM0	C		A
		16-APR-85	SHEET 22	

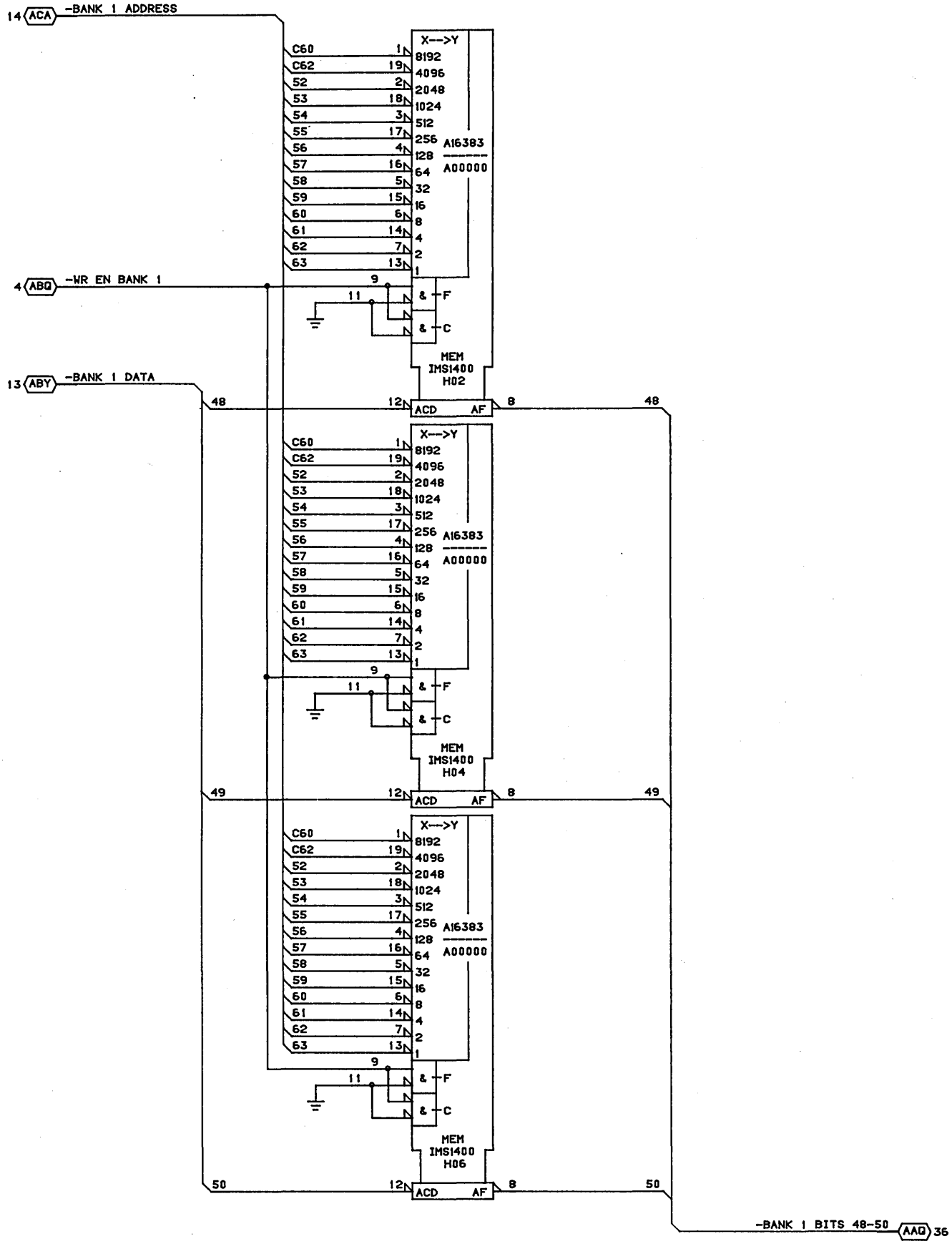

CONTROL DATA CANADA LTD	BANK 1 BITS 48-50 MODULE ASSY:210 PAK TYPE: 1CM0	C		A
		23-APR-85	SHEET 23	

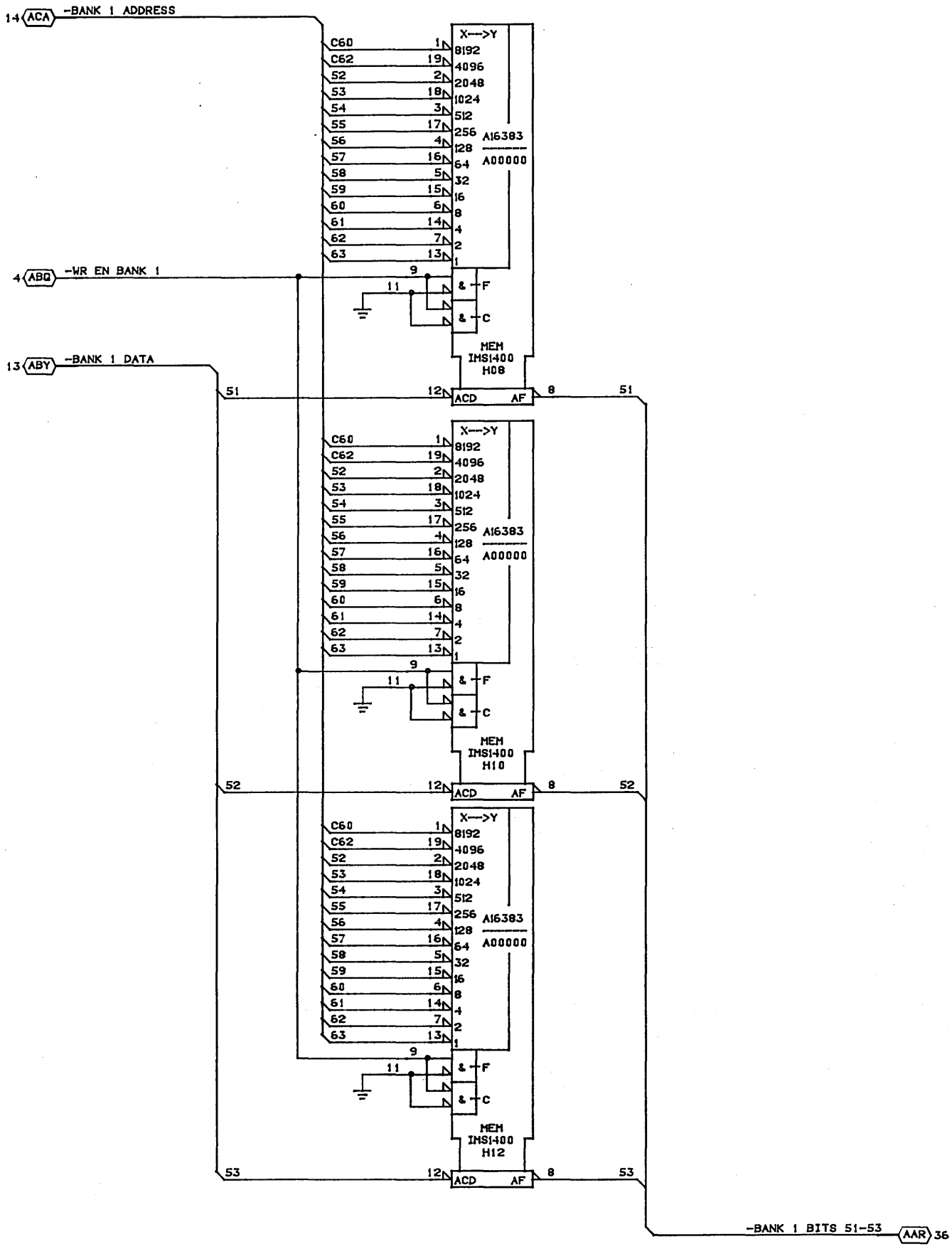

CONTROL DATA CANADA LTD	BANK 1 BITS 51-53 MODULE ASSY: 210 PAK TYPE: 1CM0	C		A
		16-APR-85	SHEET 24	

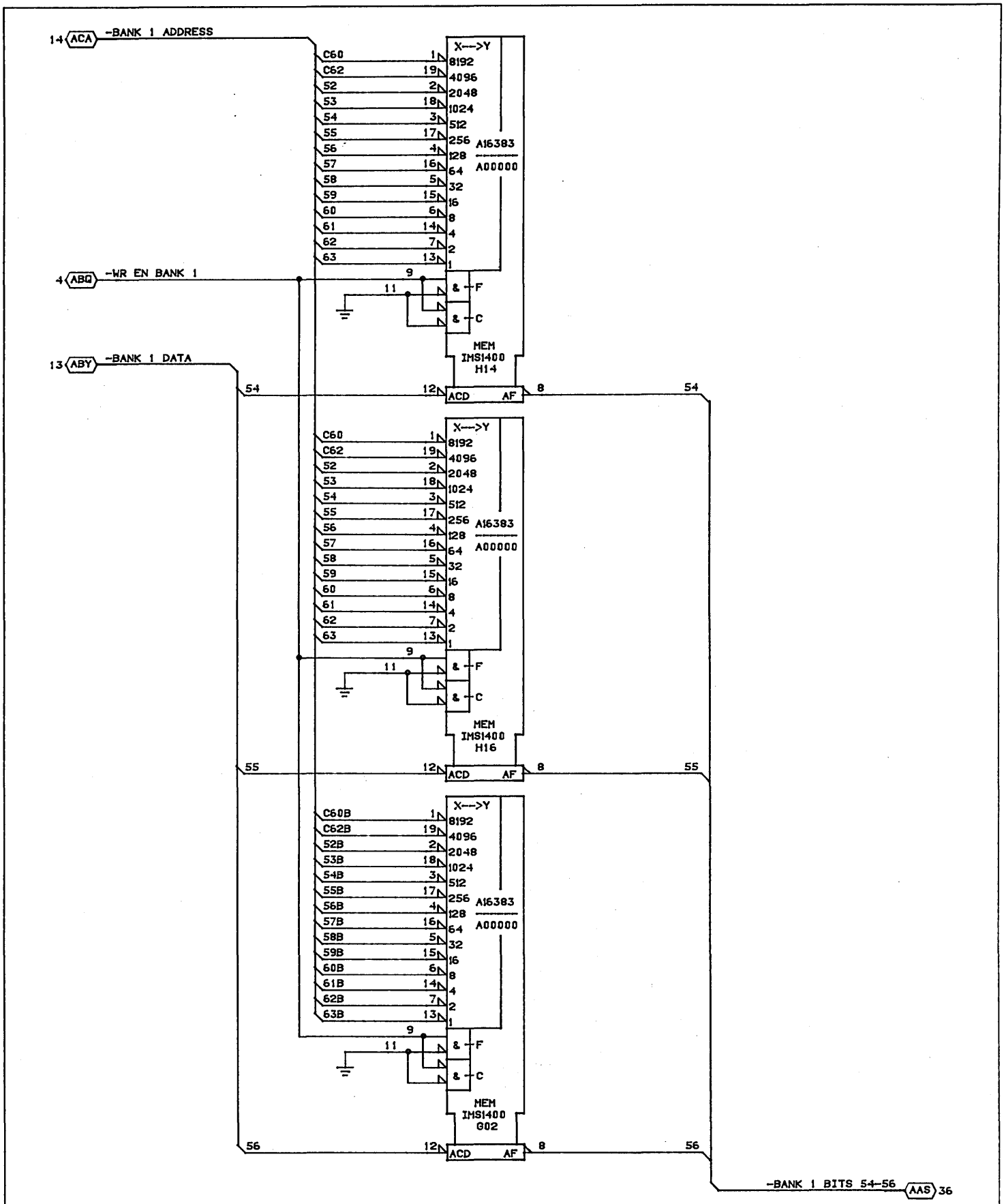

CONTROL DATA CANADA LTD	BANK 1 BITS 54-56 MODULE ASSY:210 PAK TYPE: 1CM0	C		A
		16-APR-85	SHEET 25	

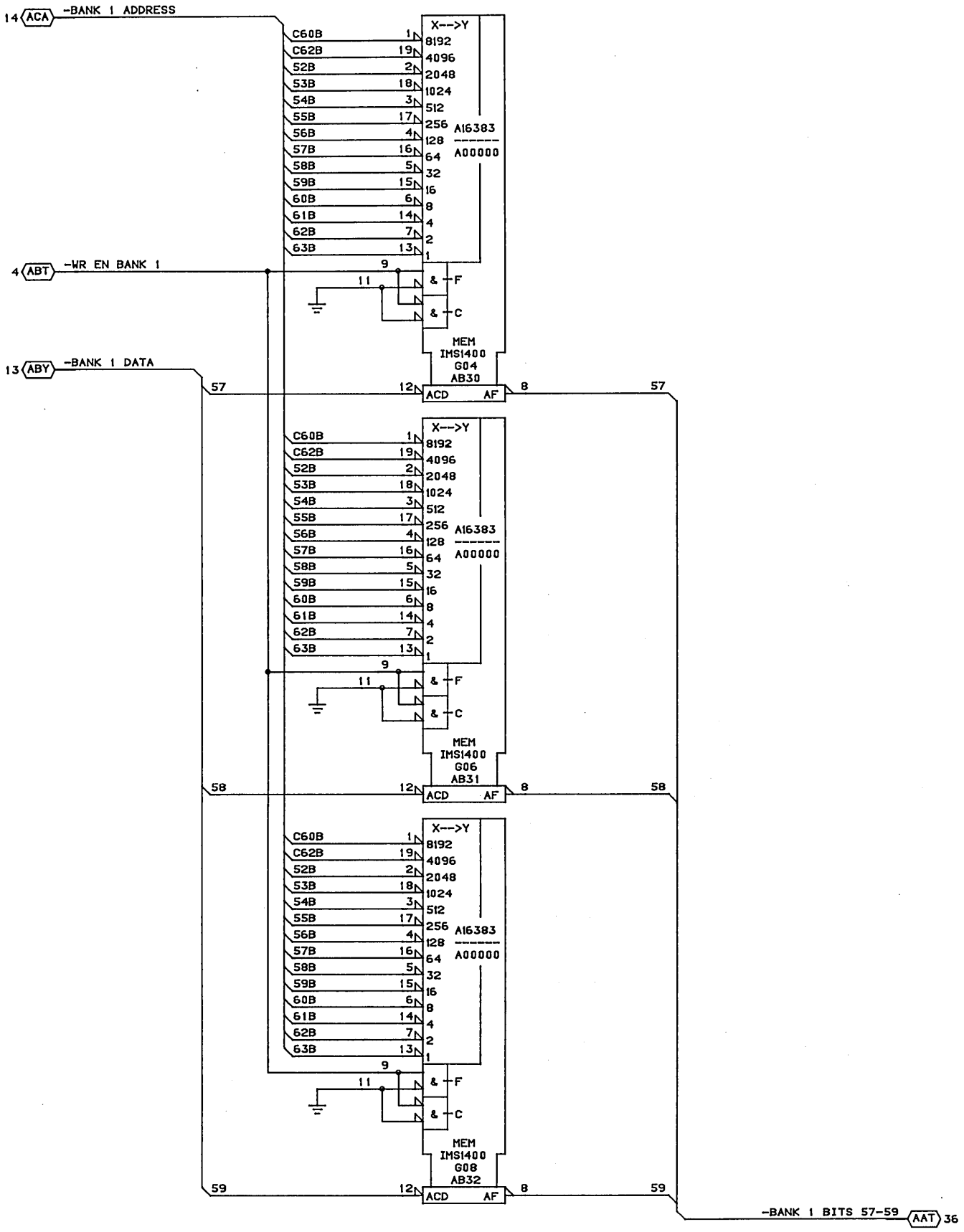

CONTROL DATA CANADA LTD	BANK 1 BITS 57-59 MODULE ASSY:210 PAK TYPE: 1CM0	C		A
		16-APR-85	SHEET 26	

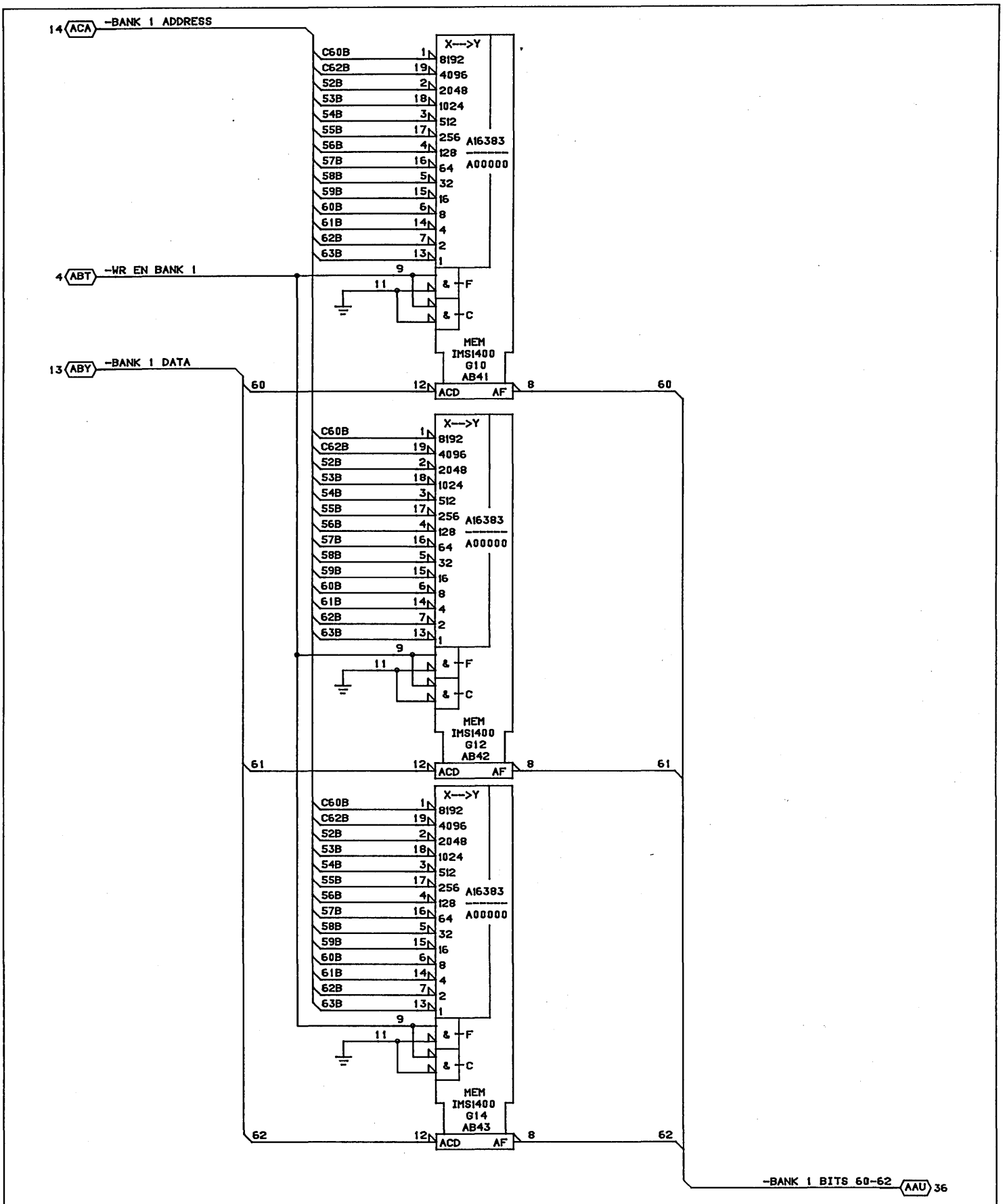

CONTROL DATA CANADA LTD	BANK 1 BITS 60-62 MODULE ASSY:210 PAK TYPE: 1CM0	C		A
		16-APR-85	SHEET 27	

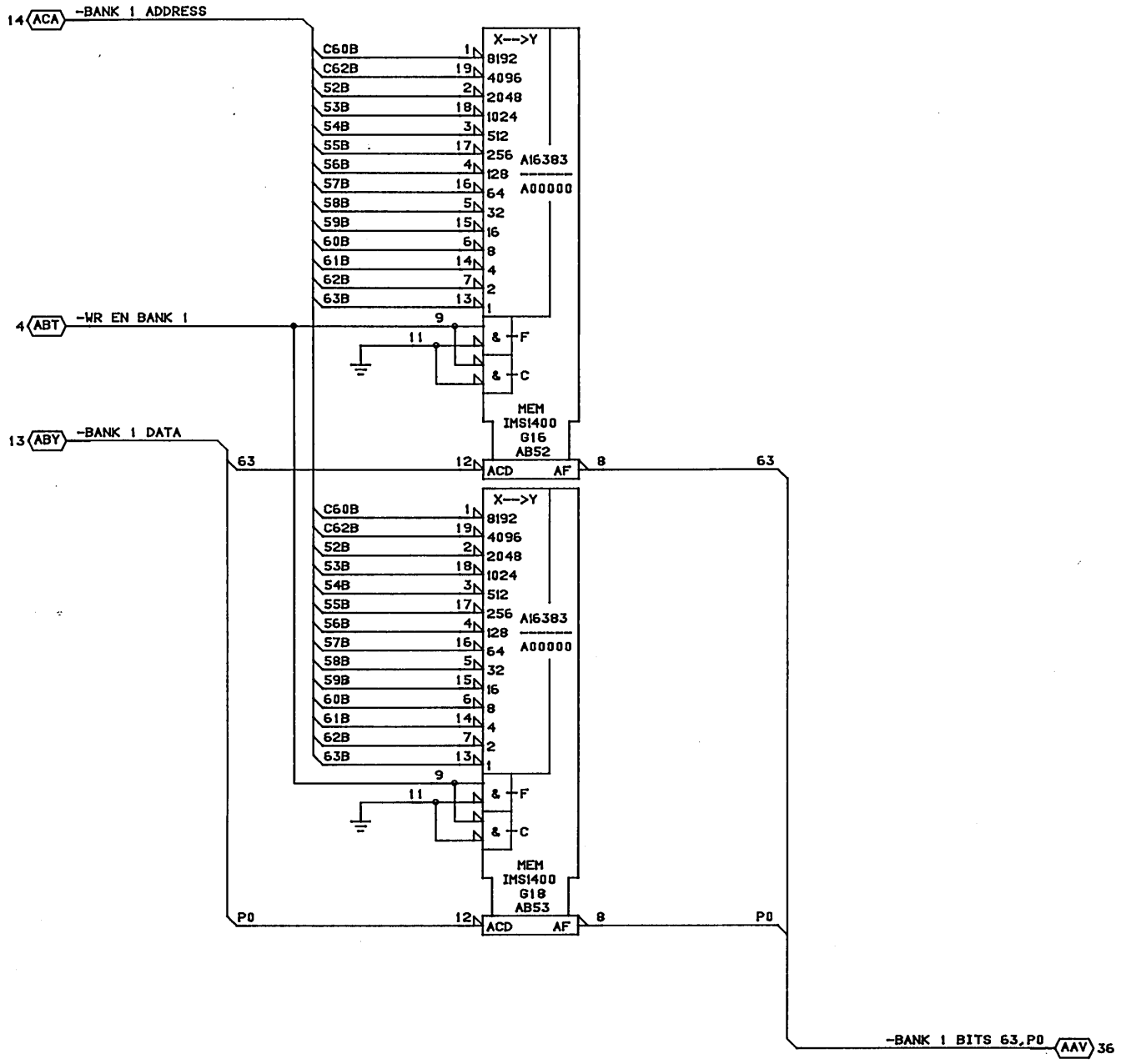

CONTROL DATA CANADA LTD	BANK 1 BITS 63,P0 MODULE ASSY:210 PAK TYPE: 1CM0		C		A
		16-APR-85	SHEET 28		

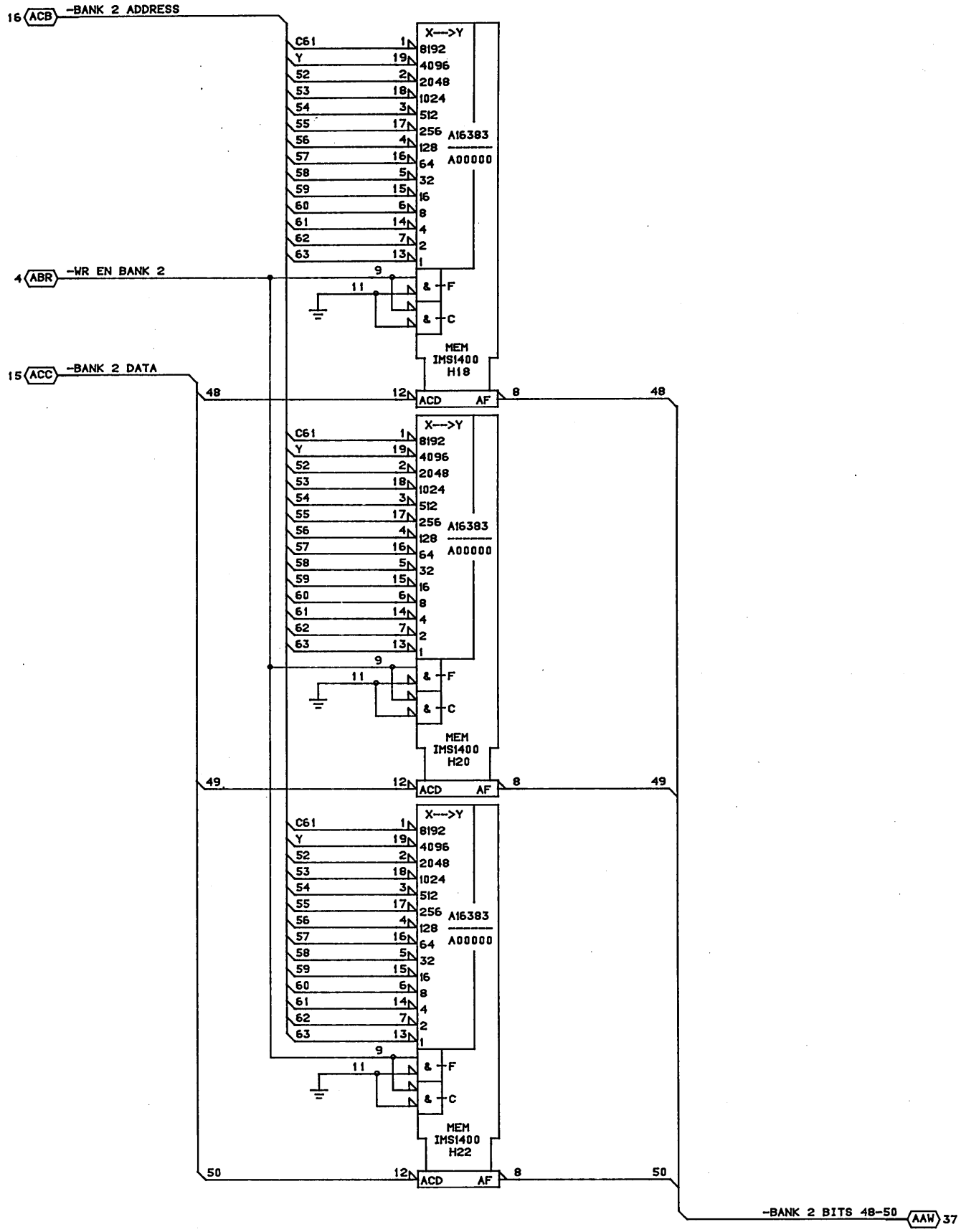

CONTROL DATA CANADA LTD	BANK 2 BITS 48-50		C		A
	MODULE ASSY:210 PAK	16-APR-85	SHEET 29		
	TYPE: 1CM0				

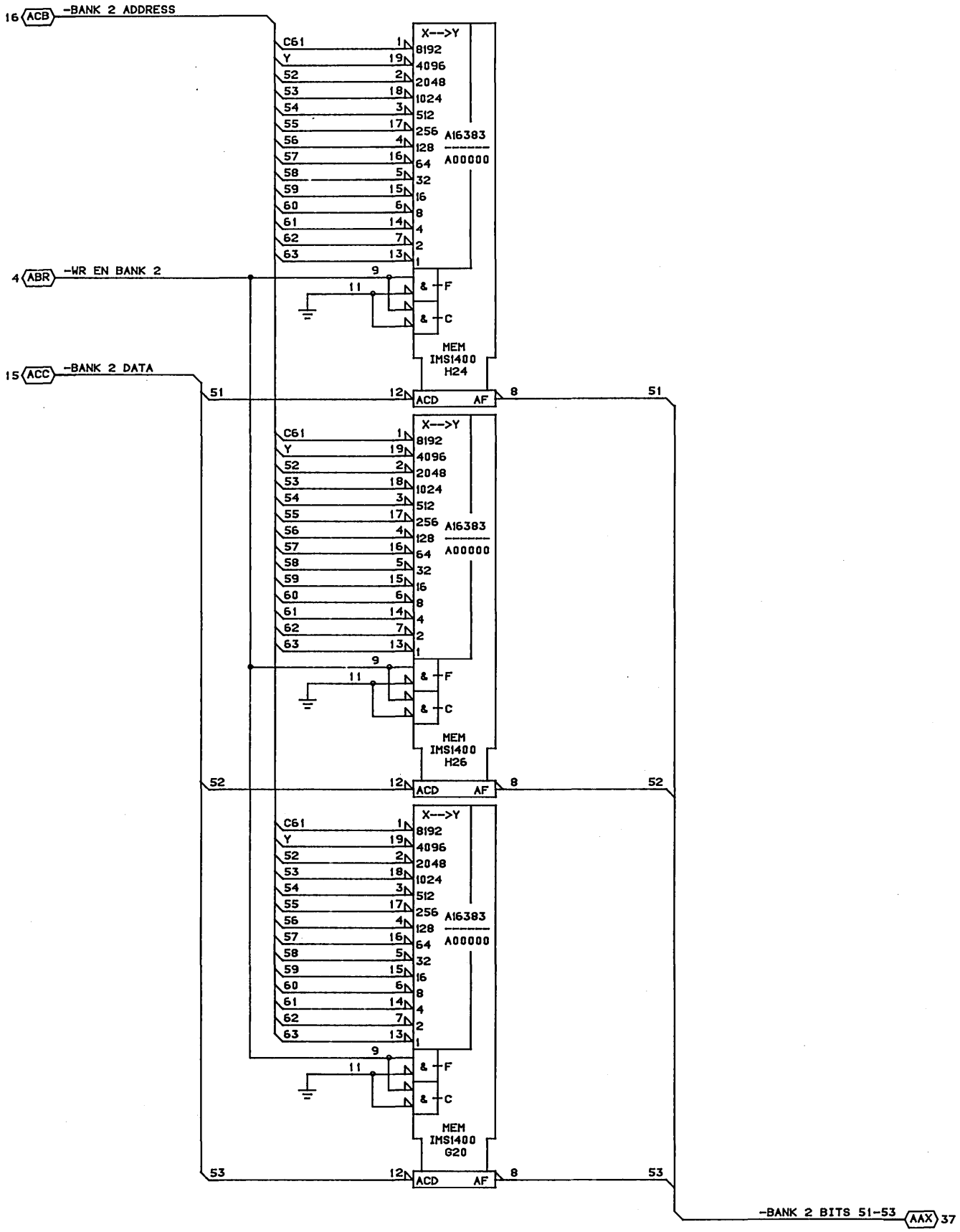

CONTROL DATA CANADA LTD	BANK 2 BITS 51-53 MODULE ASSY:210 PAK TYPE: 1CM0		C	A
		16-APR-85	SHEET 30	

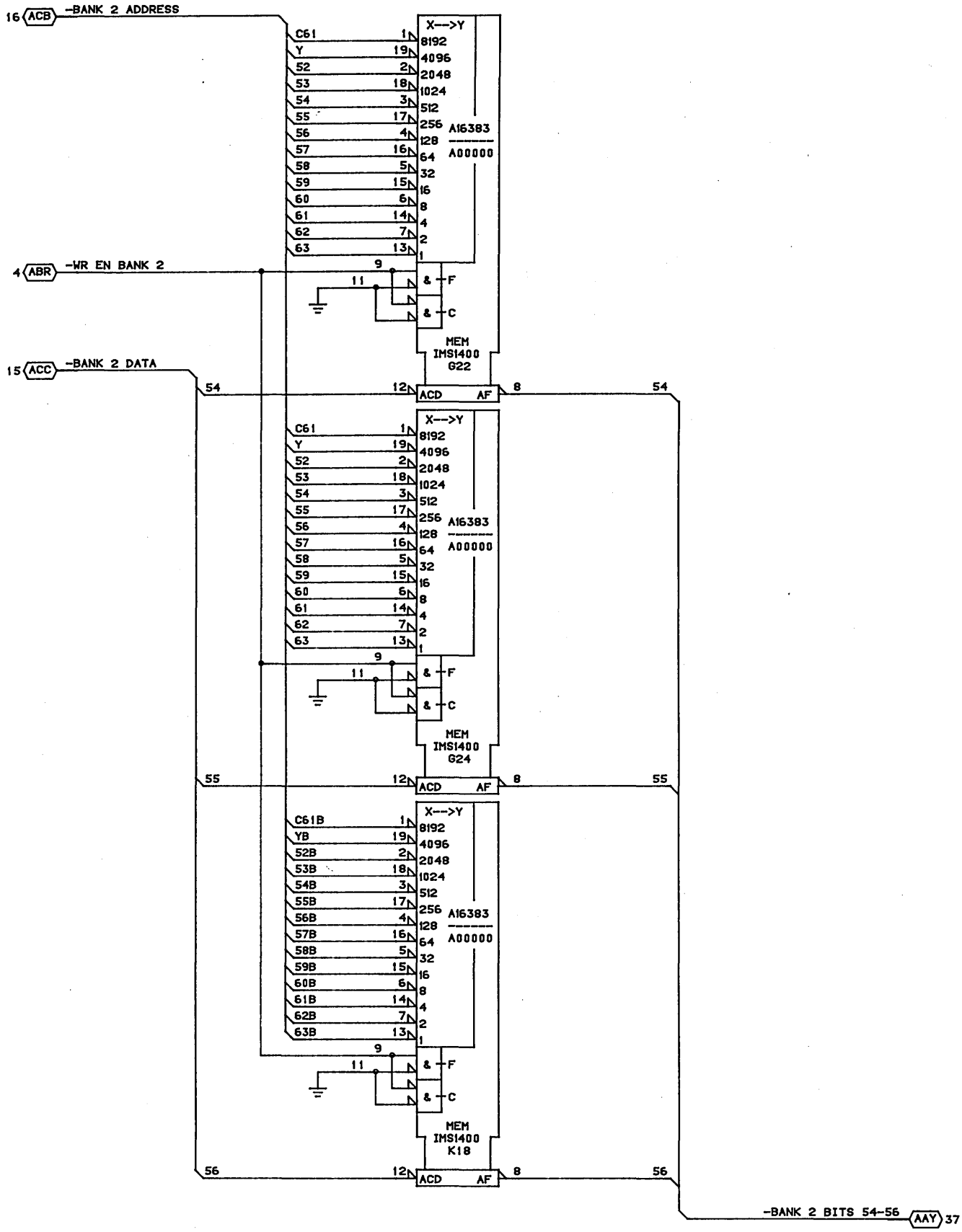

CONTROL DATA CANADA LTD	BANK 2 BITS 54-56 MODULE ASSY:210 PAK TYPE: 1CM0	C		A
		16-APR-85	SHEET 31	

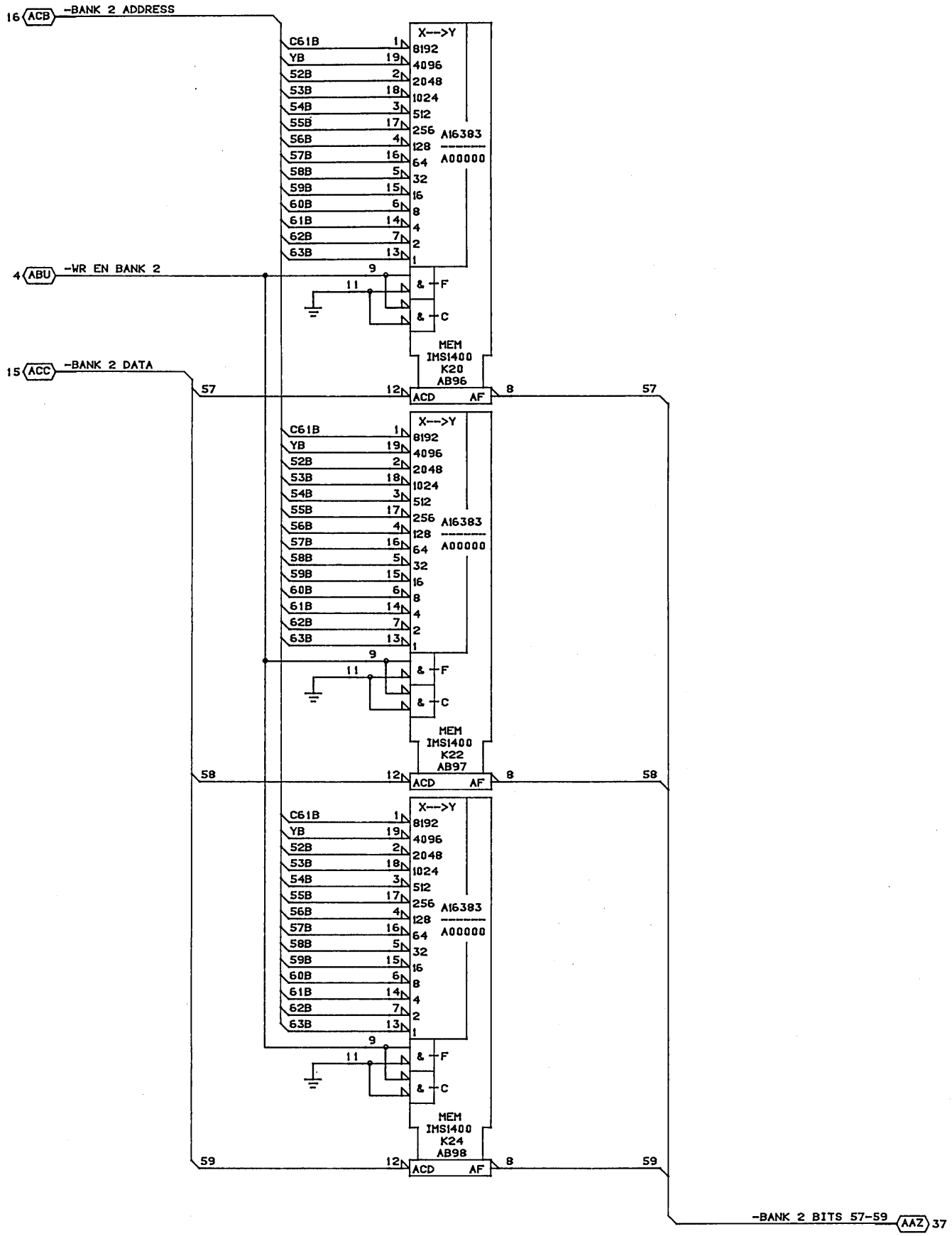

CONTROL DATA CANADA LTD	BANK 2 BITS 57-59 MODULE ASSY:210 PAK TYPE: 1CM0	C		A
		16-APR-85	SHEET 32	

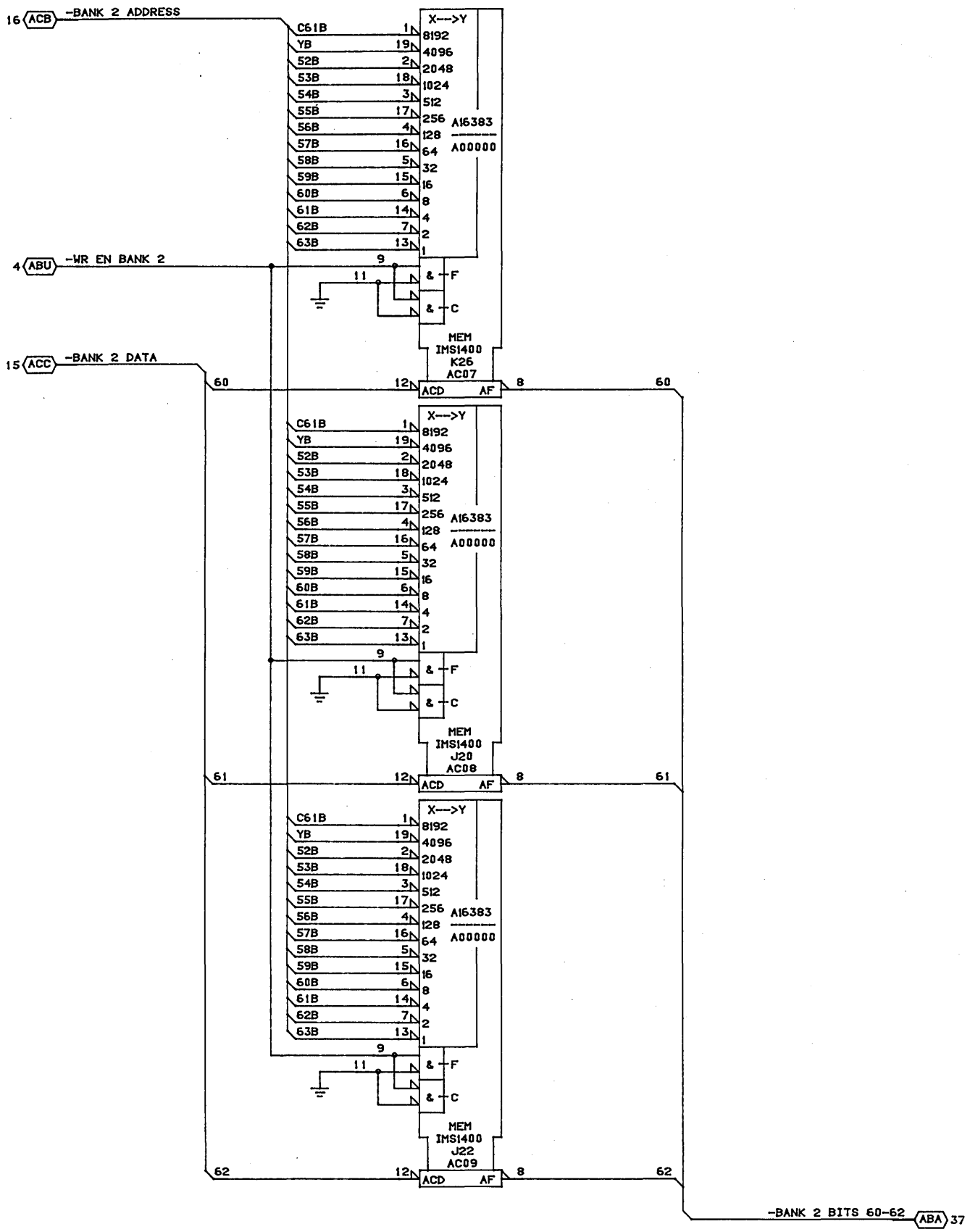

CONTROL DATA CANADA LTD	BANK 2 BITS 60-63 MODULE ASSY:210 PAK TYPE: 1CM0	C		A
		16-APR-85	SHEET 33	

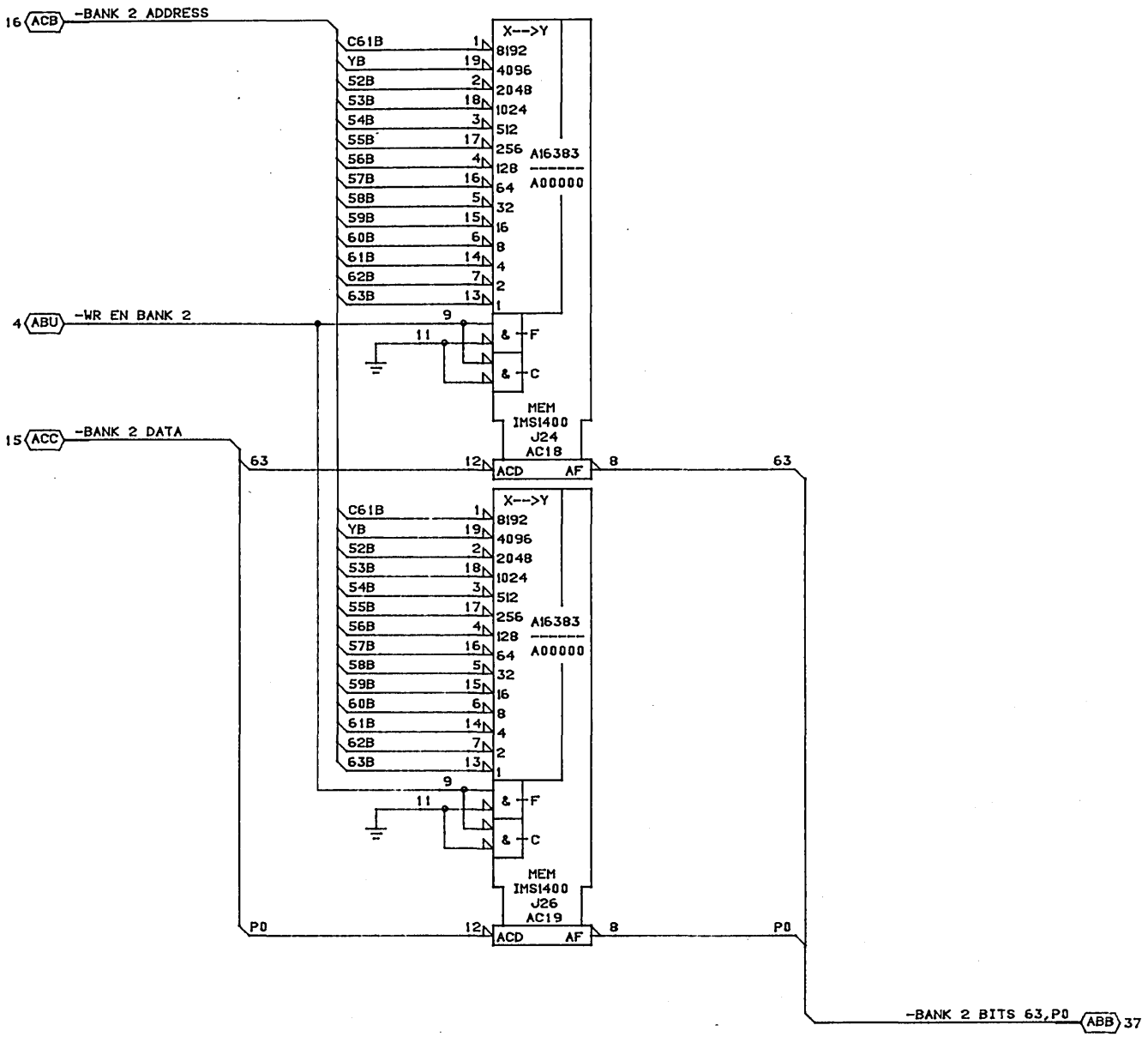

CONTROL DATA CANADA LTD	BANK 2 BITS 63,P0 MODULE ASSY:210 PAK TYPE: 1CM0	C		A
		16-APR-85	SHEET 34	

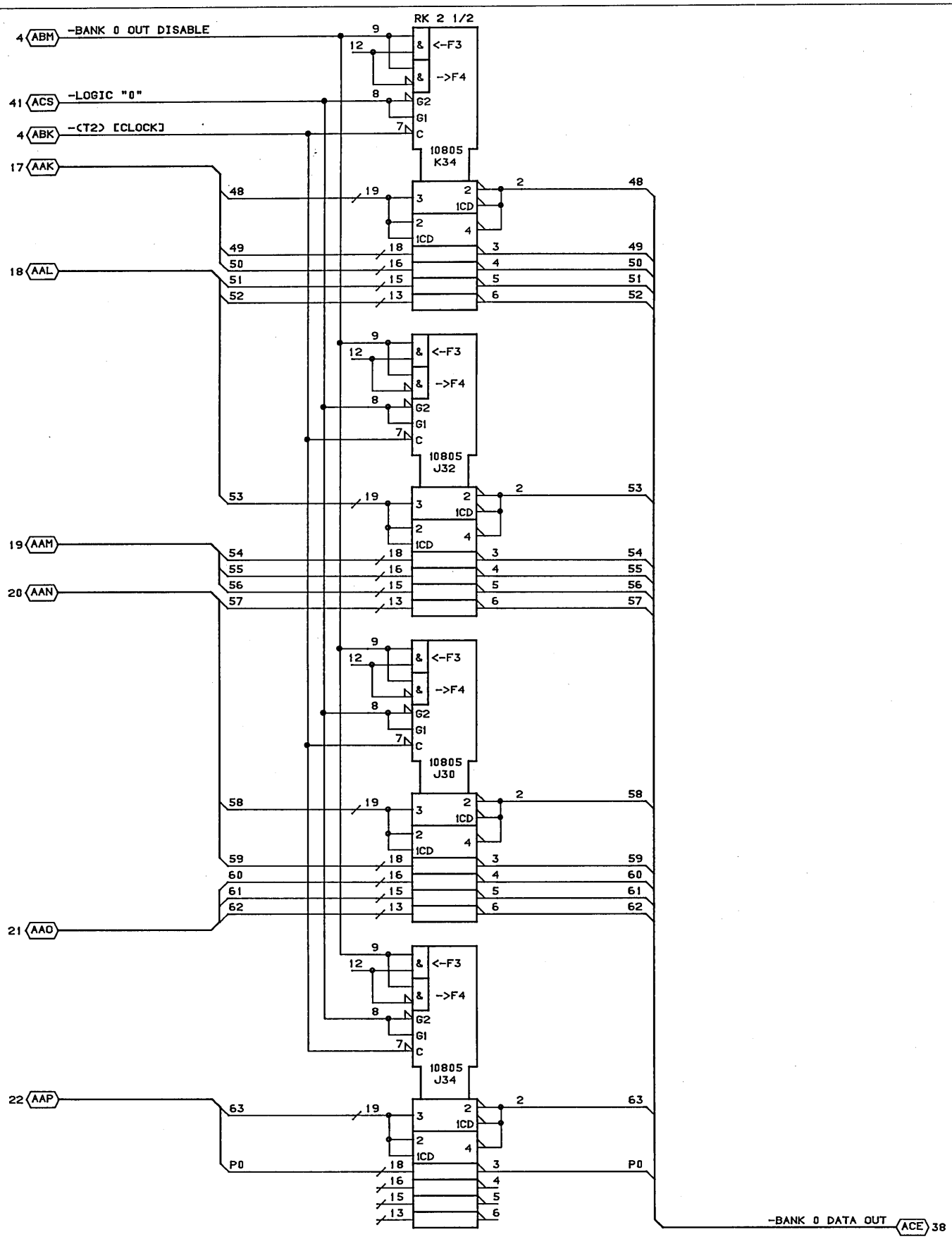

CONTROL DATA CANADA LTD	BANK 0 DATA OUT LATCH/TRANSLATION MODULE ASSY:210 PAK TYPE: 1CM0	C		A
		15-APR-85	SHEET 35	LOC D18

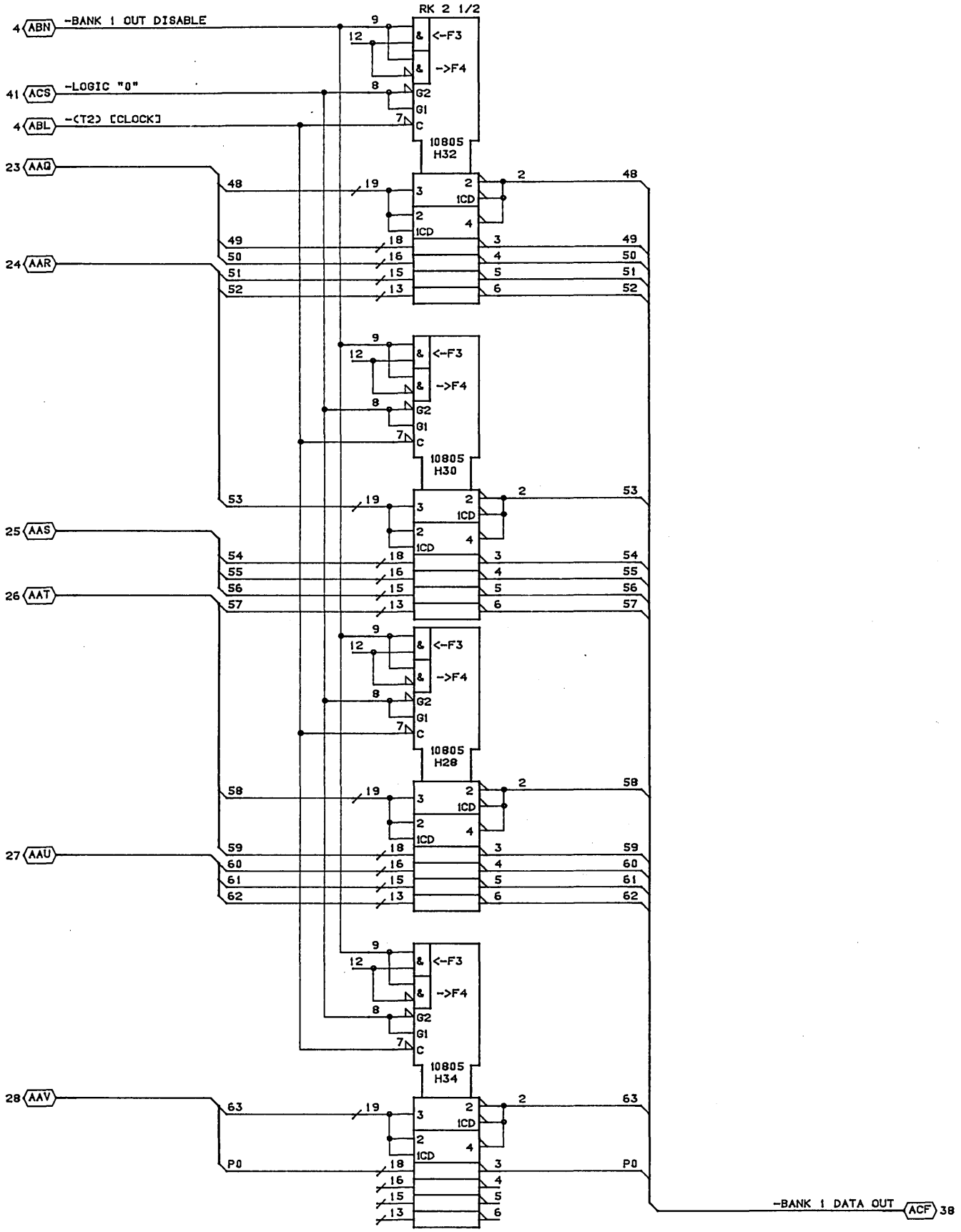

CONTROL DATA CANADA LTD	BANK 1 DATA OUT LATCH/TRANSLATION MODULE ASSY:210 PAK TYPE: 1CM0	C		A
		17-APR-85	SHEET 36	LOC D18

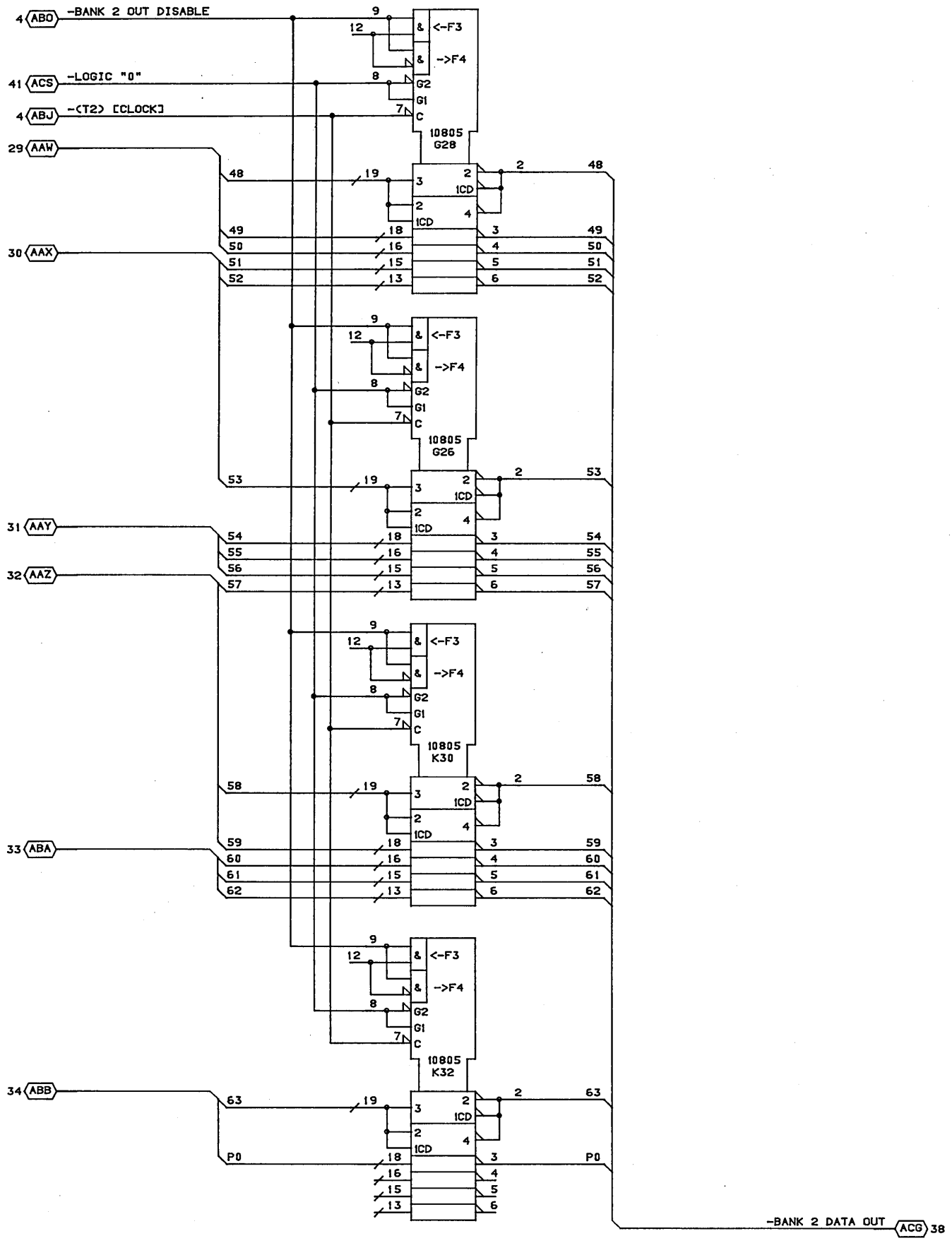

CONTROL DATA CANADA LTD	BANK 2 DATA OUT LATCH/TRANSLATION MODULE ASSY:210 PAK TYPE: 1CM0	C		A
		15-APR-85	SHEET 37	LOC D18

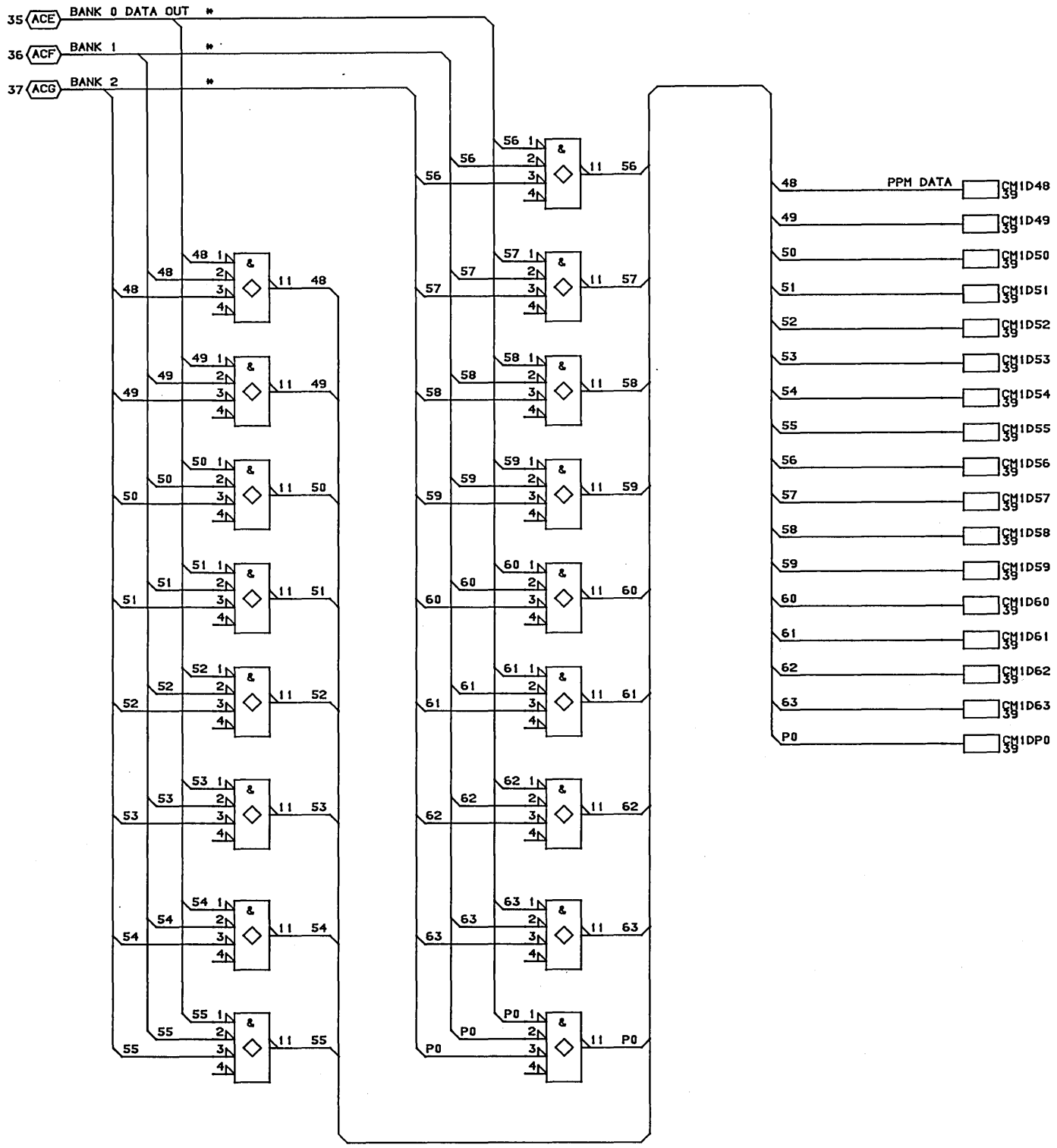

* SHORT

CONTROL DATA CANADA LTD	BANK DATA MERGE MODULE ASSEMBLY-210 PAK TYPE: 1CM0	C		A
		16-APR-85	SHEET 38	LOC. D18

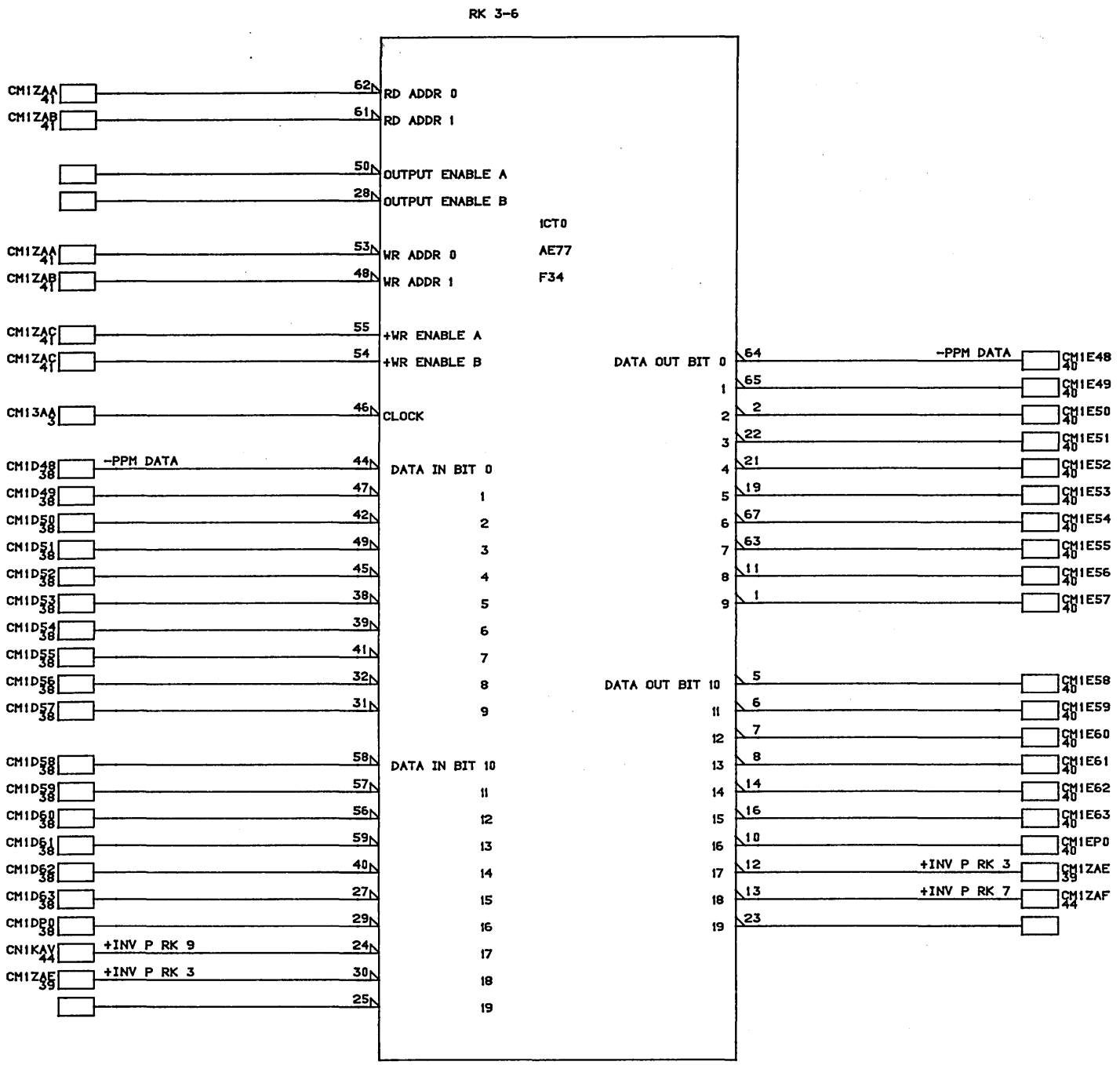

CONTROL DATA CANADA LTD	PPM DATA HOLDING REG. MODULE ASSEMBLY-210 PAK TYPE: 1CM0		C		A
		16-APR-85	SHEET 39	LOC. D18	

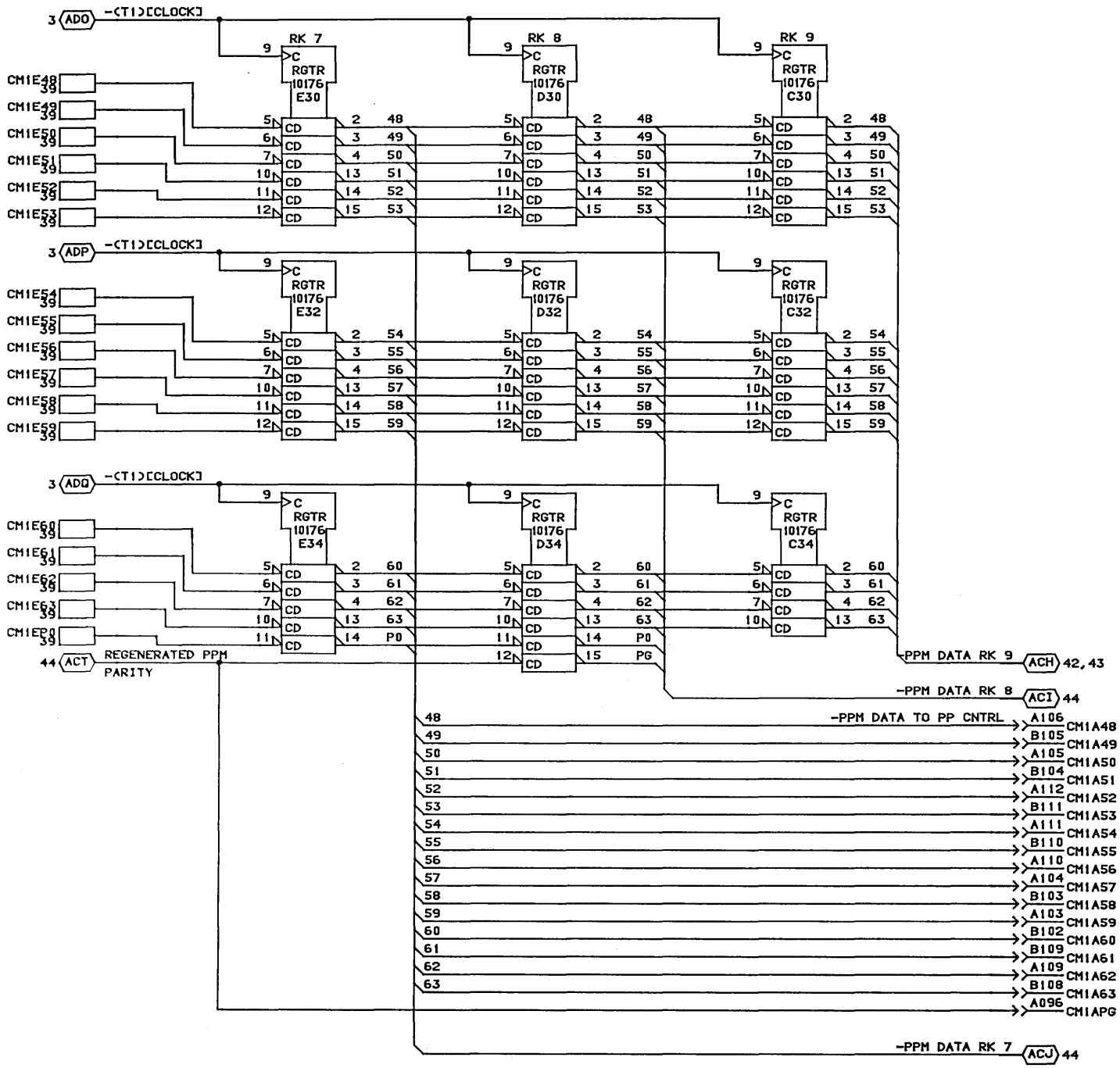

CONTROL DATA CANADA LTD	PPM DATA HOLDING REG MODULE ASSEMBLY-210 PAK TYPE: 1CM0	C		A
		16-APR-85	SHEET 40	LOC. D18

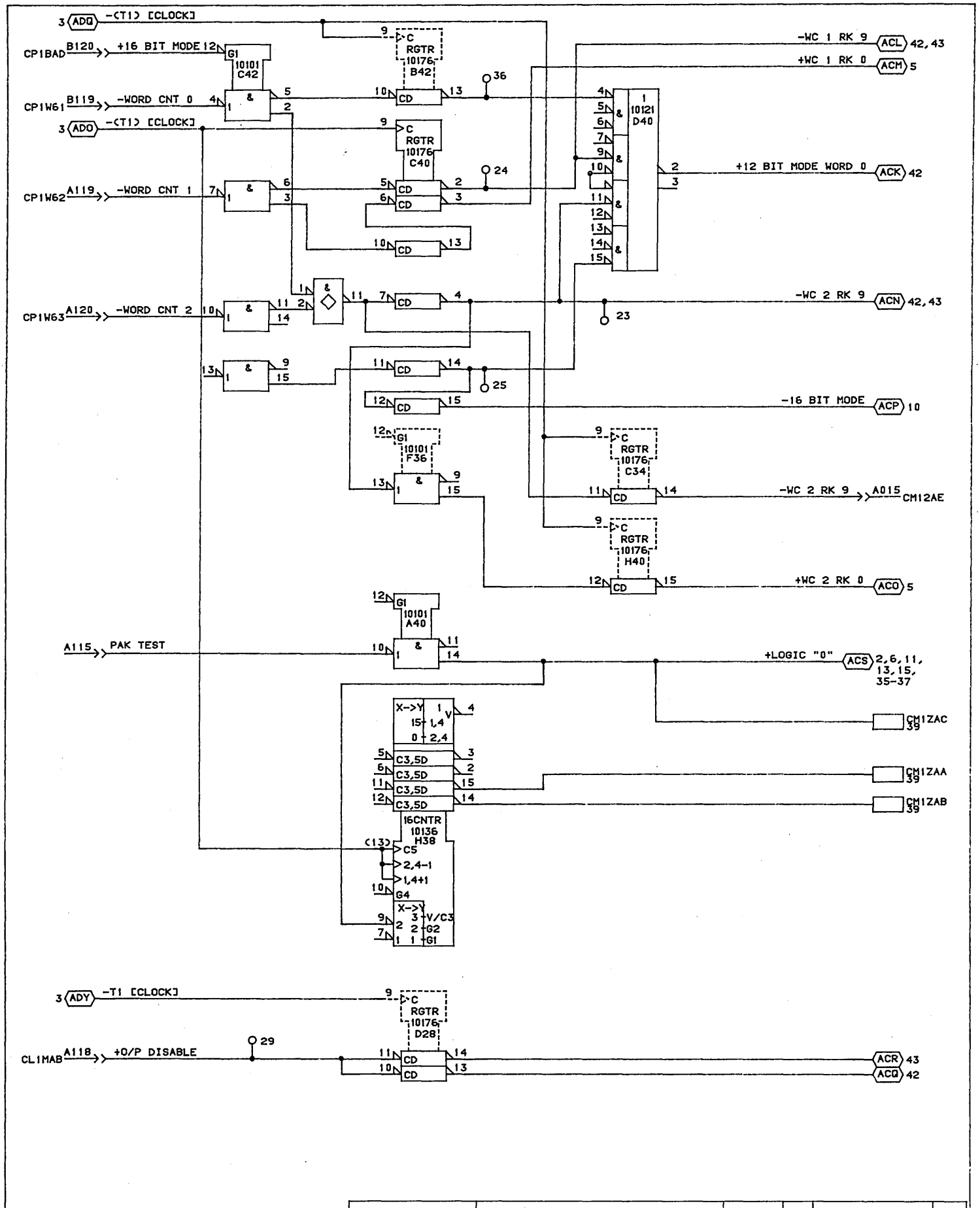

CONTROL DATA CANADA LTD	CONVERSION WORD COUNT MODULE ASSEMBLY-210 PAK TYPE: 1CM0	C		A
		04-NOV-85	SHEET 41	

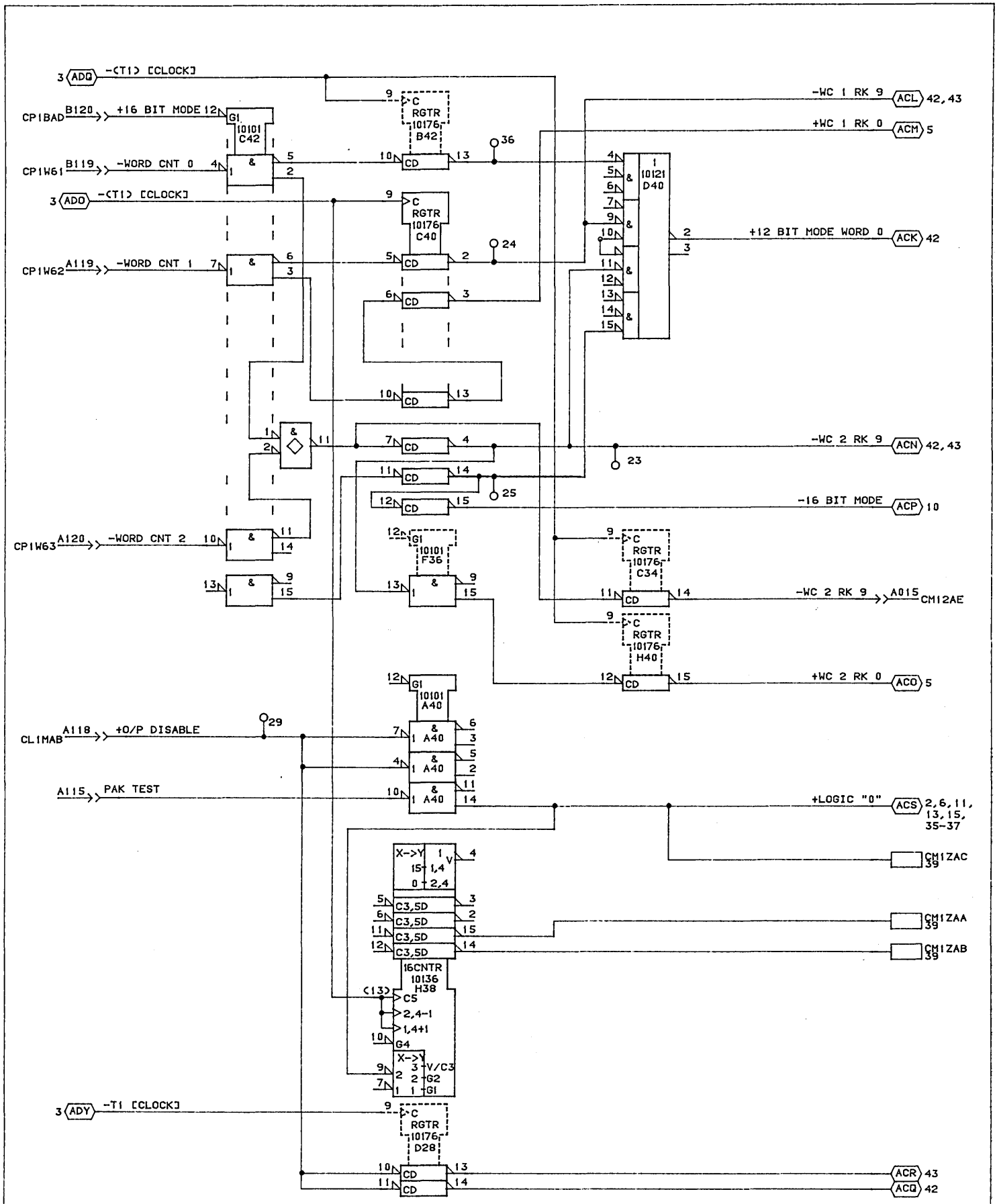

NOTE: THIS DRAWING IS APPLICABLE ONLY TO PWB 19268136

CONTROL DATA CANADA LTD	CONVERSION WORD COUNT MODULE ASSEMBLY-210 PAK TYPE: 1CM0	C		A
		04-NOV-85	SHEET 41A	

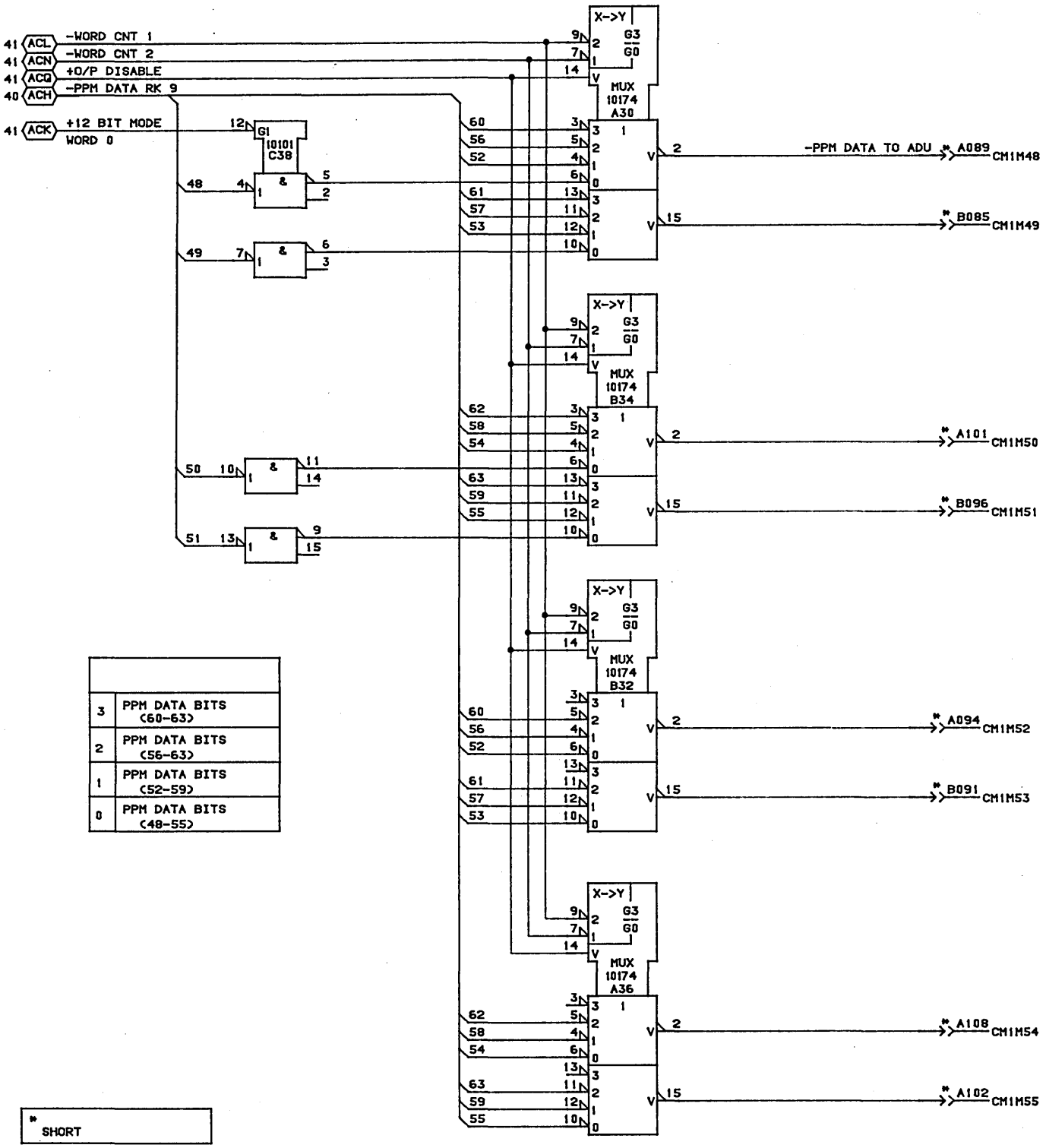

3	PPM DATA BITS (60-63)
2	PPM DATA BITS (56-63)
1	PPM DATA BITS (52-59)
0	PPM DATA BITS (48-55)

* SHORT

CONTROL DATA CANADA LTD	ADU MUX BITS 48-55 MODULE ASSEMBLY-210 PAK TYPE: 1CM0	C		A
		15-APR-85	SHEET 42	LOC D18

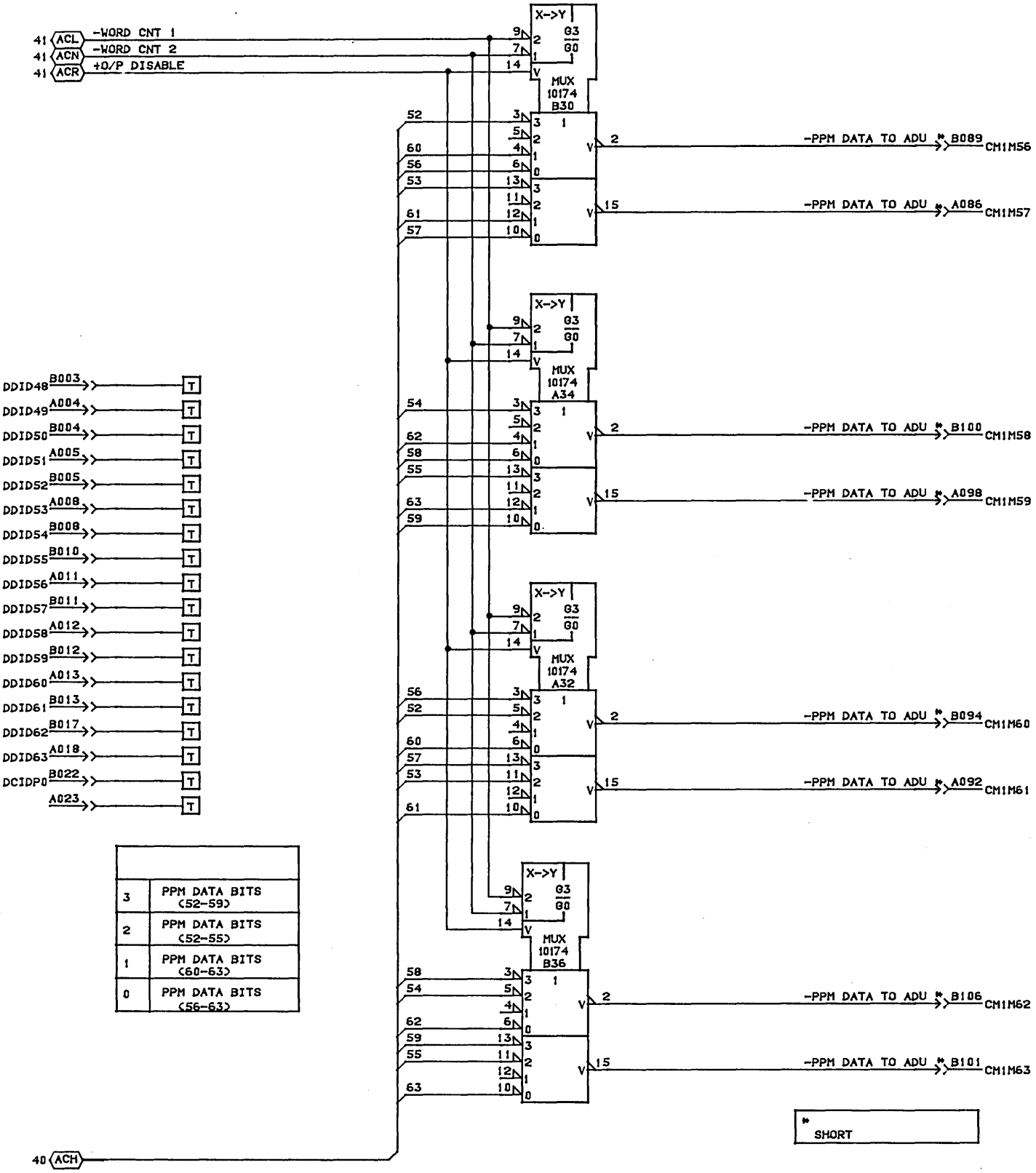

CONTROL DATA CANADA LTD	ADU MUX BITS 56-63 MODULE ASSEMBLY-210 PAK TYPE: 1CM0	C		A
		15-APR-85	SHEET 43	LOC D18

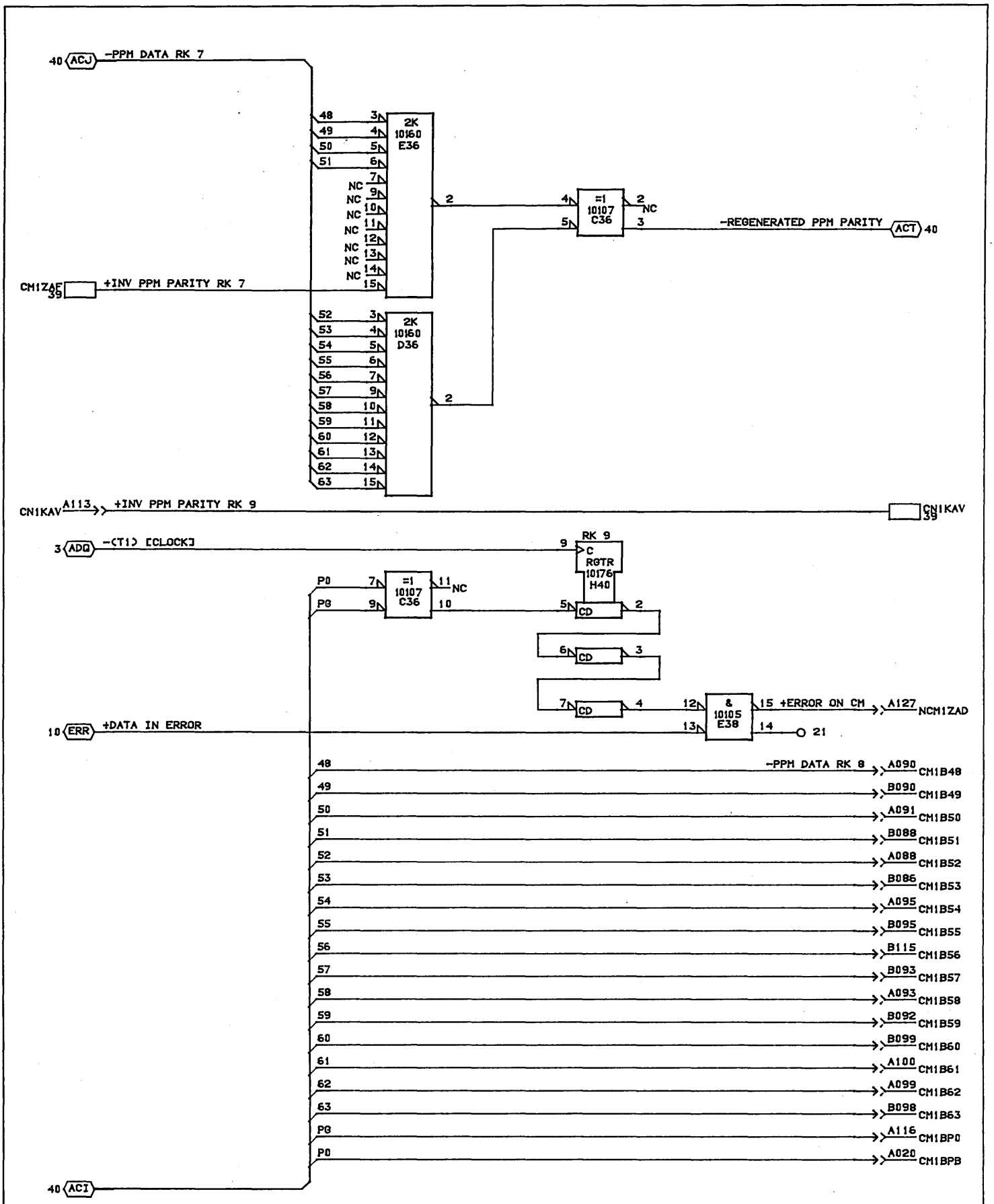

CONTROL DATA CANADA LTD	PPM PARITY GEN/CHECKER	C		A
	MODULE ASSEMBLY-210 PAK TYPE: 1CM0	15-APR-85	SHEET 44	LOC D18

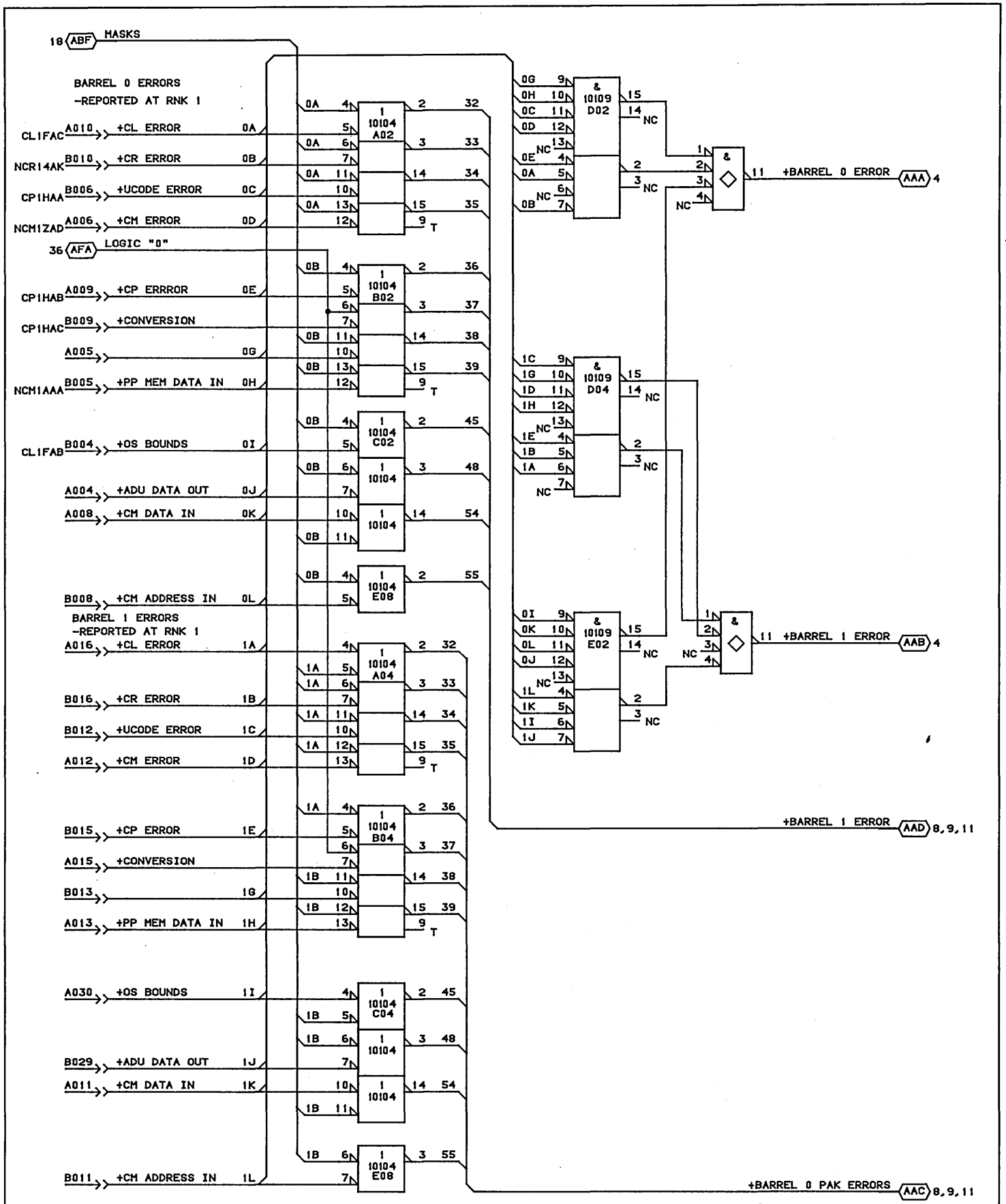

CONTROL DATA CANADA LTD	MASK + GROUP ERRORS BARRELS 0 +1/4X MODULE ASSEMBLY- 210 PAK TYPE: 1CN0		C		A
		02-MAY-84	SHEET 02	LOC. D07	

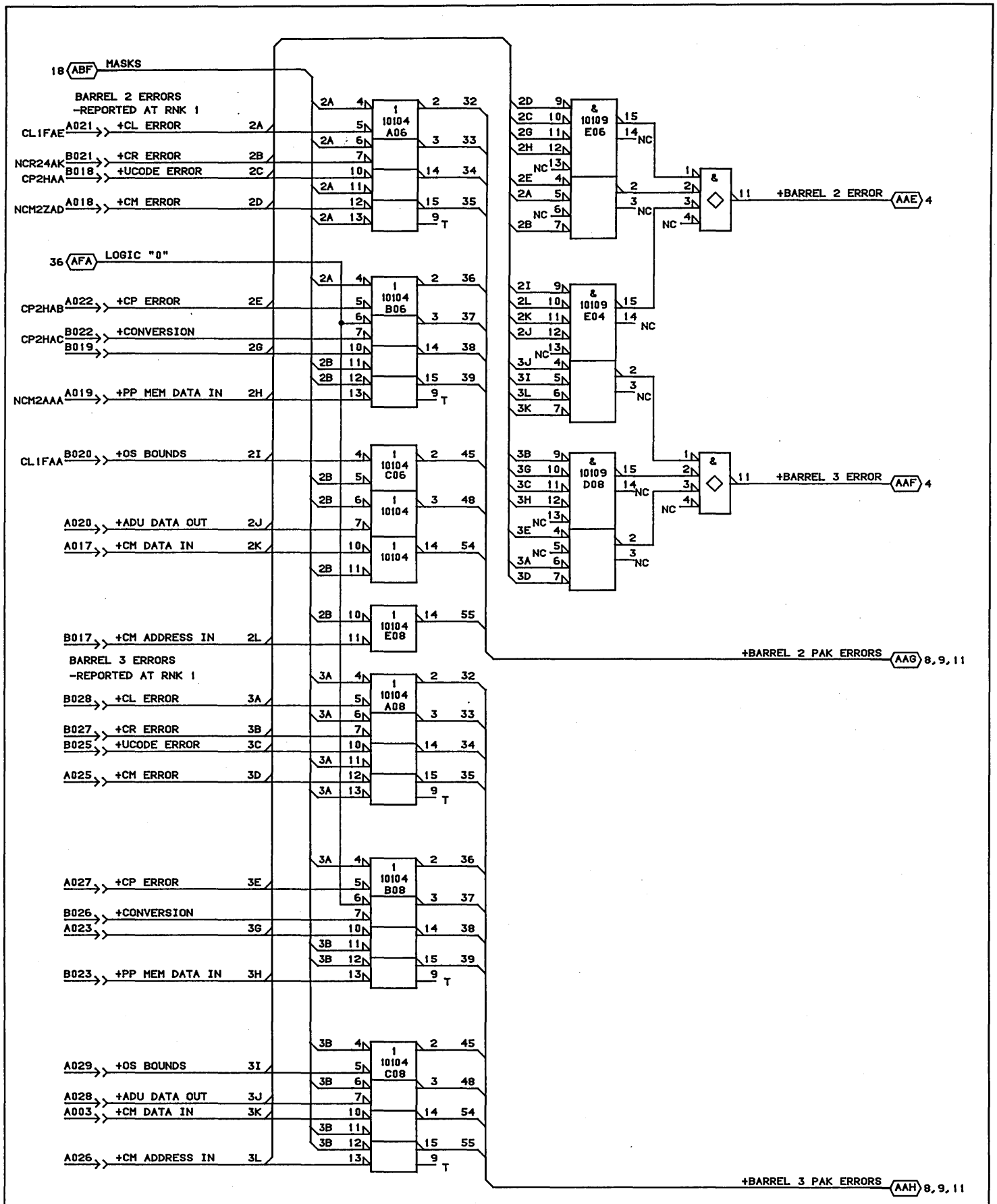

CONTROL DATA CANADA LTD	MASK + GROUP ERRORS BARRELS 1/2X,2,3 MODULE ASSEMBLY- 210 PAK TYPE: 1CN0	C		A
		02-MAY-84	SHEET 03	LOC. D07

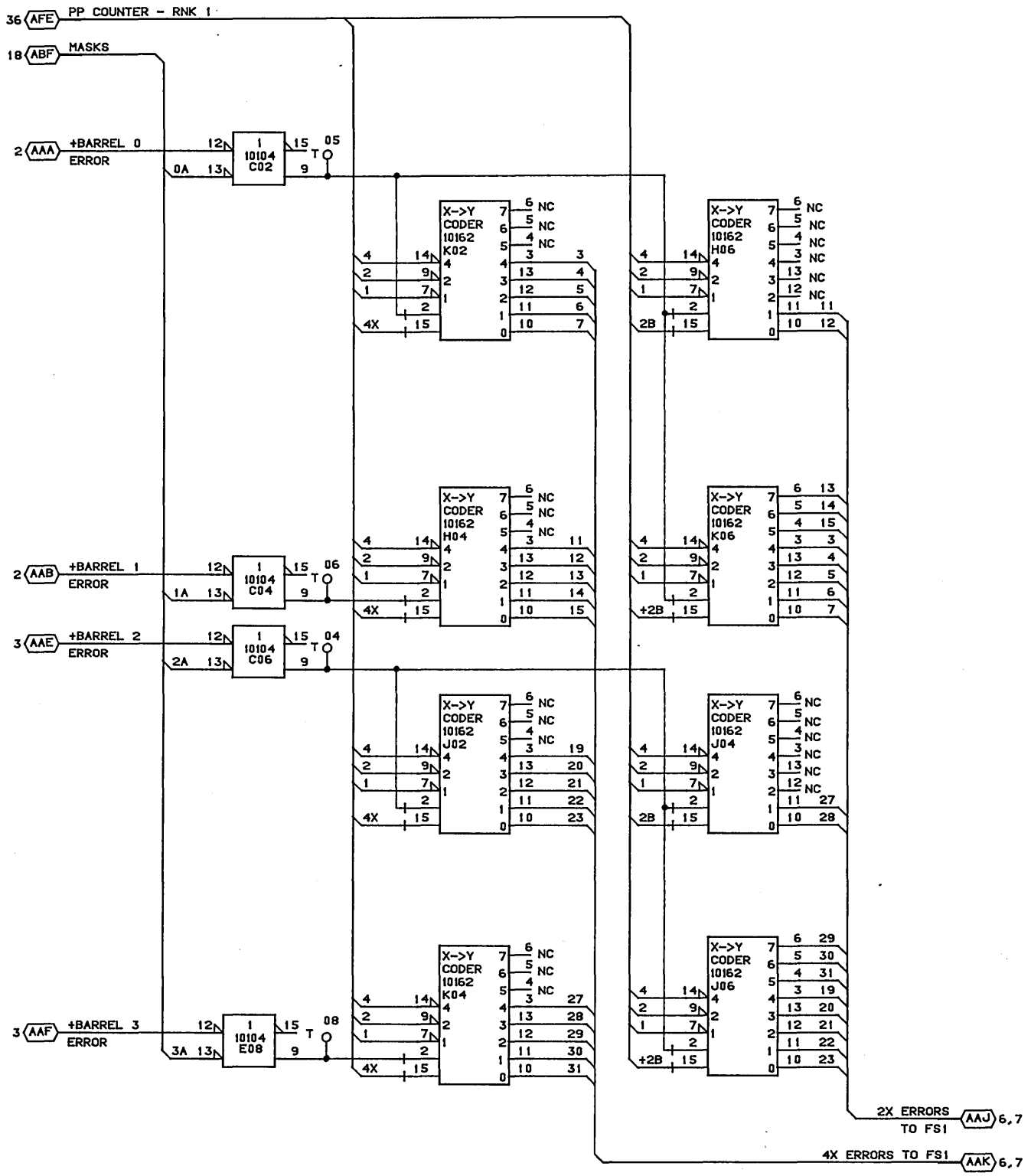

CONTROL DATA CANADA LTD	DECODE TIMED ERROR TO APP MODULE ASSEMBLY- 210 PAK TYPE: 1CN0	C		A
		02-MAY-84	SHEET 04	LOC. D07

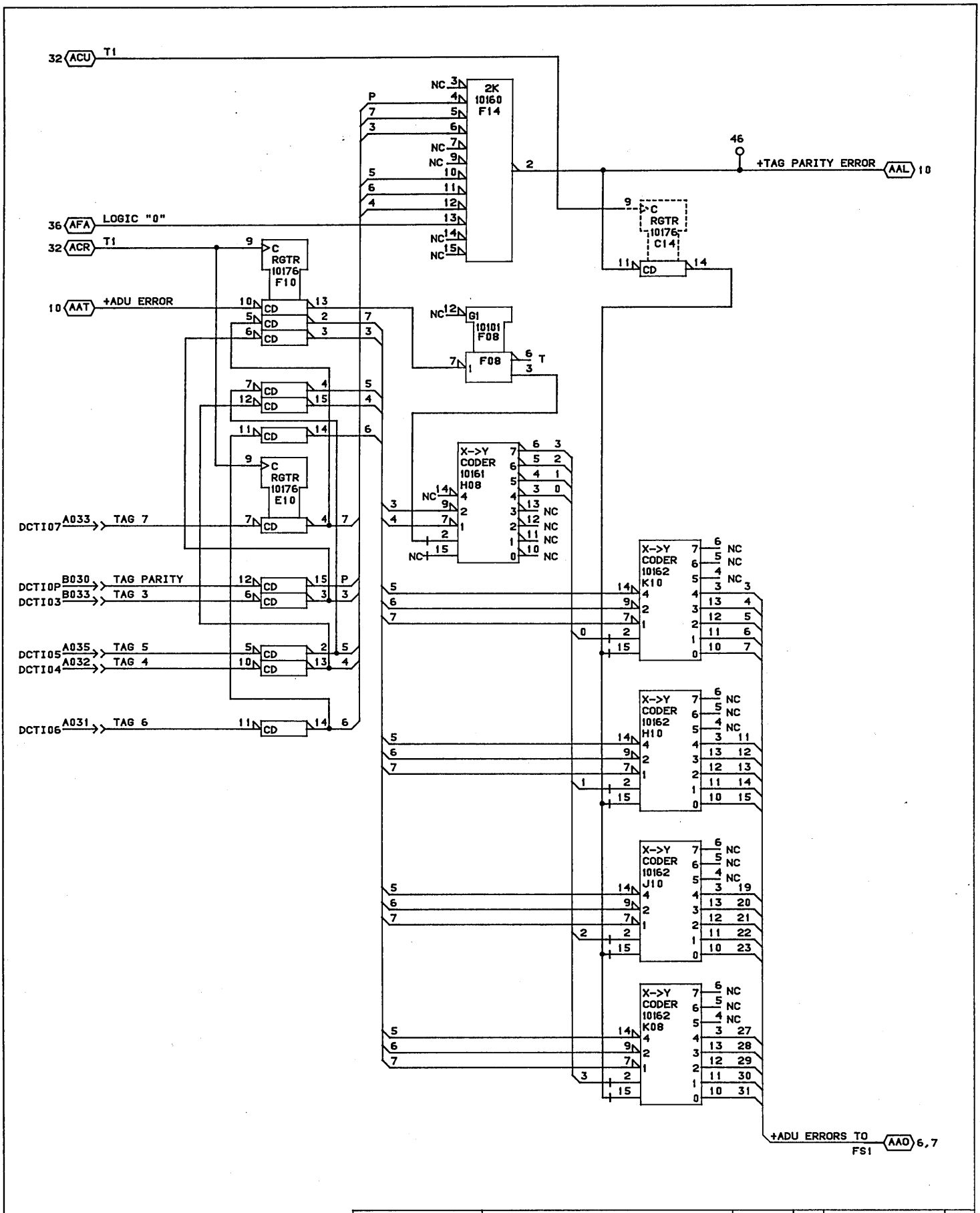

CONTROL DATA CANADA LTD	ENCODE CM ERROR TO PPU MODULE ASSEMBLY-210 PAK TYPE: 1CN0	C		A
		02-MAY-84	SHEET 05	LOC. D07

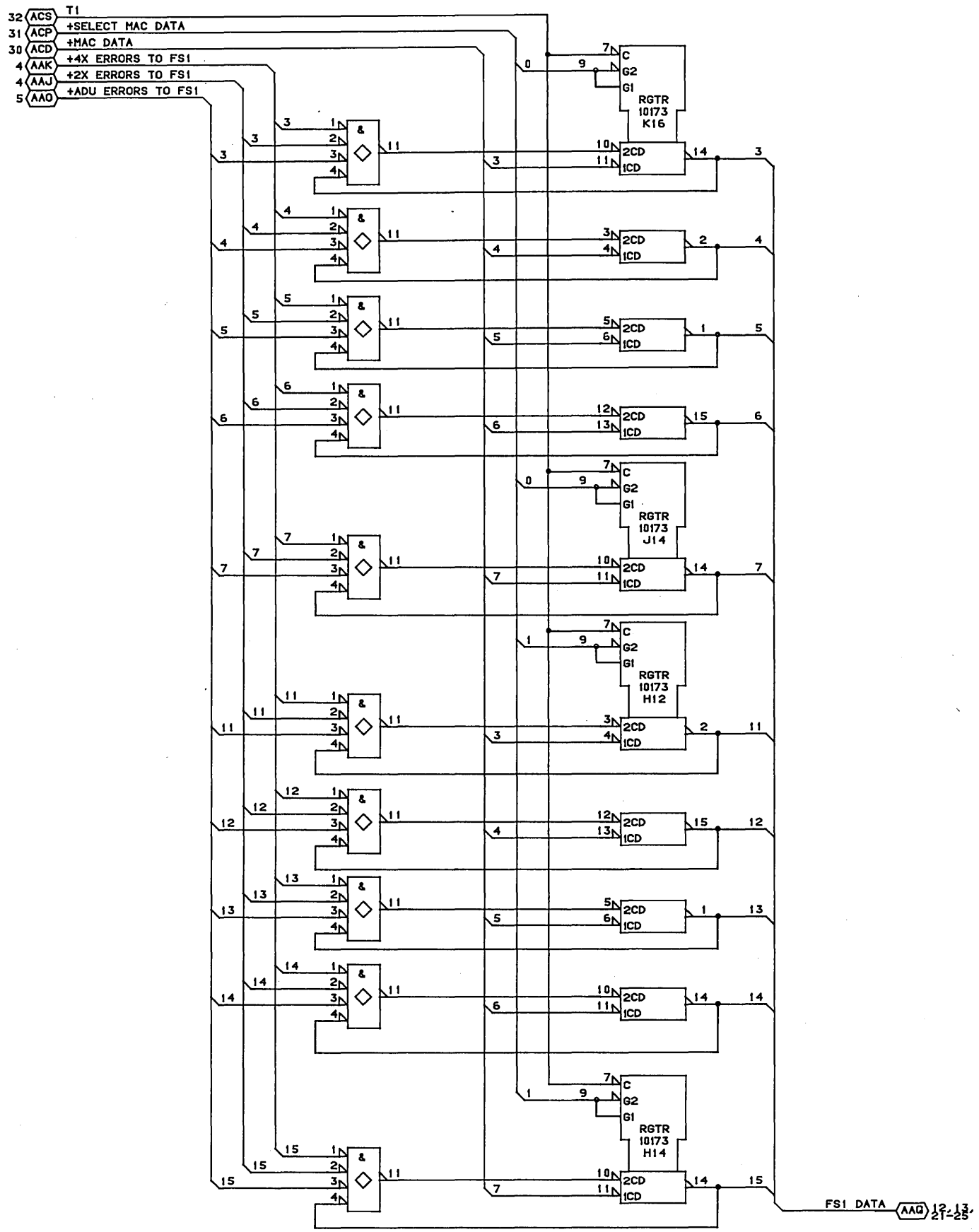

CONTROL DATA CANADA LTD	FS1 BYTES 0,1 MODULE ASSEMBLY-210 PAK TYPE: 1CN0	C		A
		02-MAY-84	SHEET 06	LOC. D07

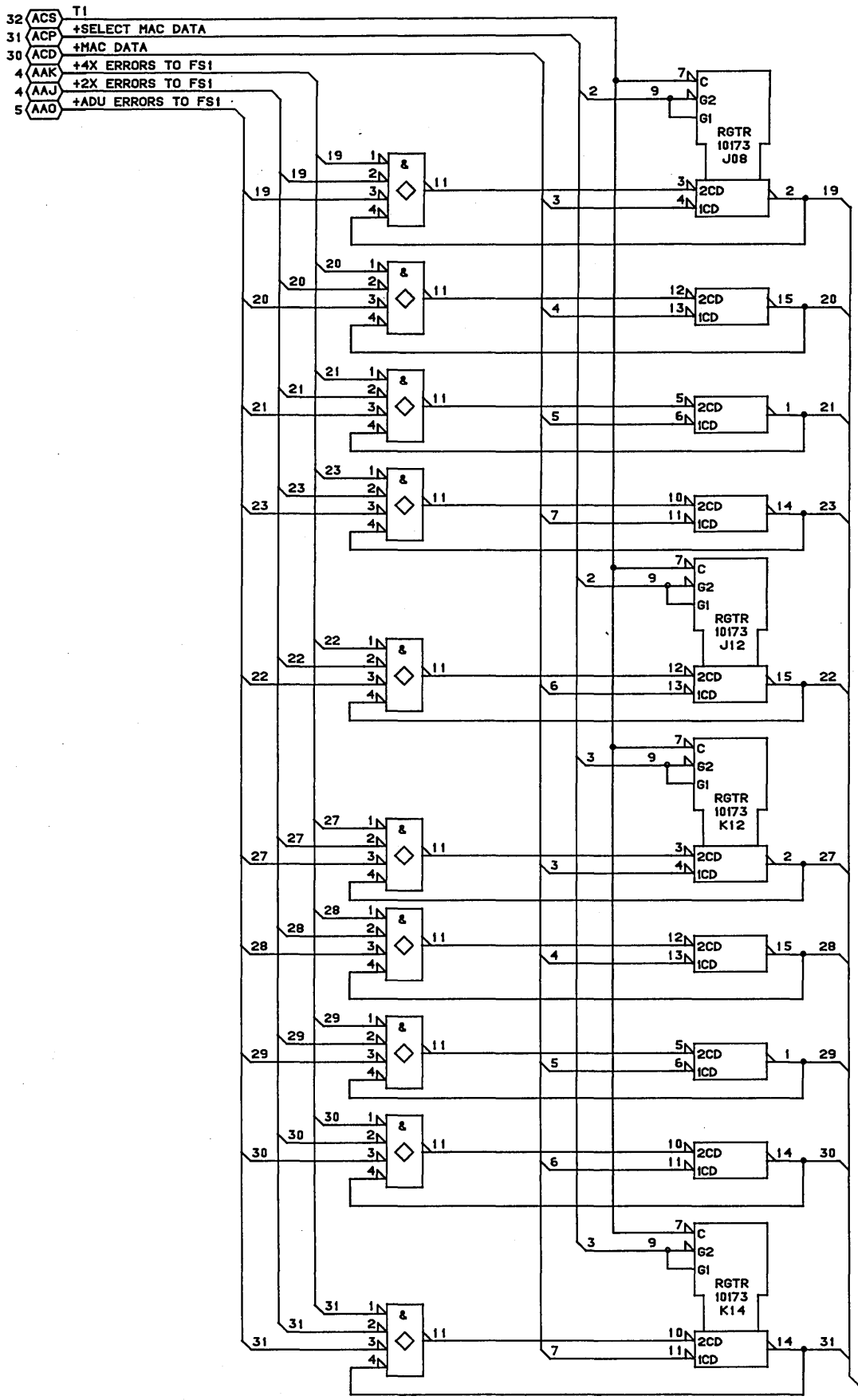

CONTROL DATA CANADA LTD	FS1 BYTES 2,3 MODULE ASSEMBLY-210 PAK TYPE: 1CN0	C		A
		02-MAY-84	SHEET 07	LOC. D07

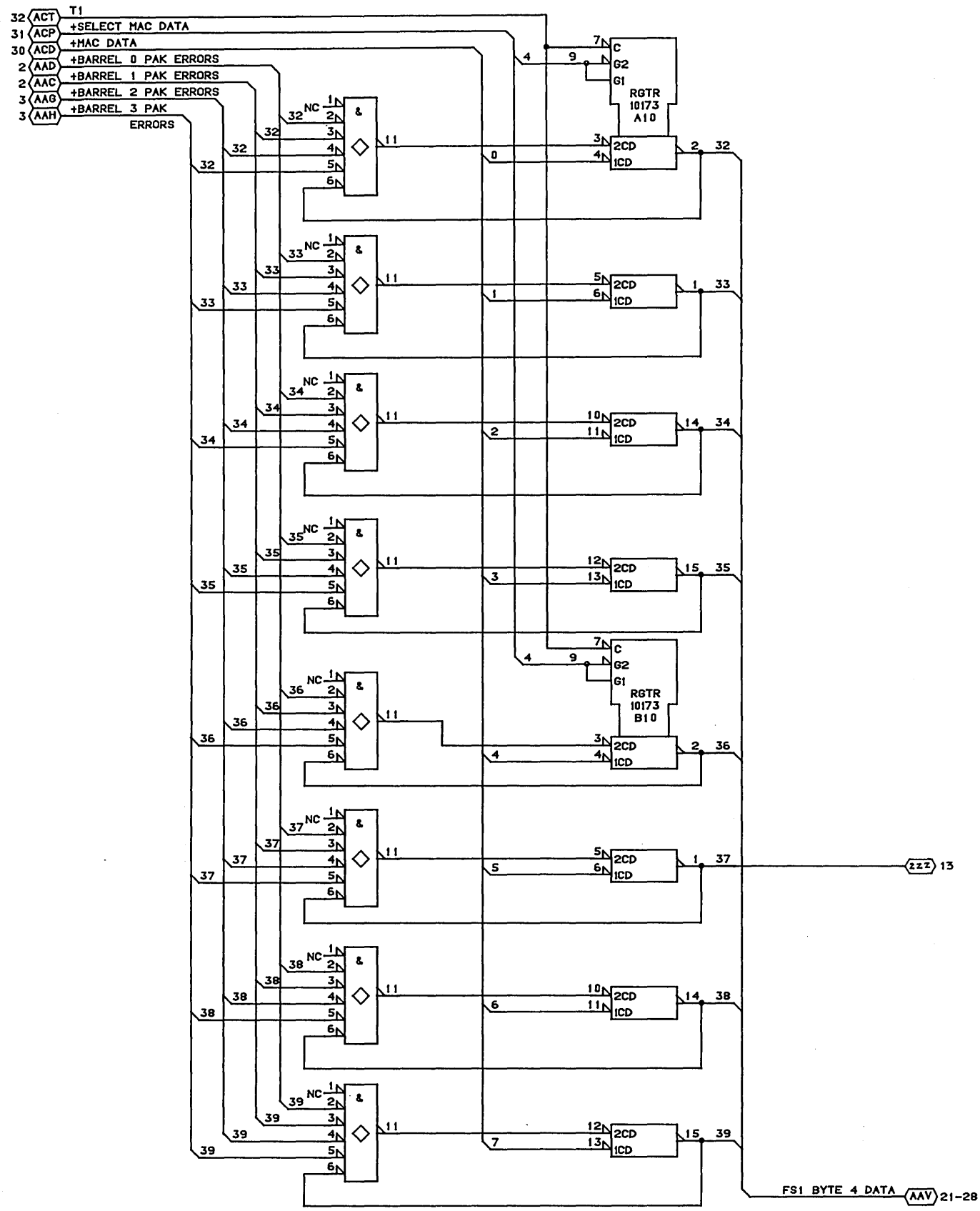

CONTROL DATA CANADA LTD	FS1 BYTE 4 MODULE ASSEMBLY-210 PAK TYPE: 1CN0	C		A
		02-MAY-84	SHEET 08	LOC. D07

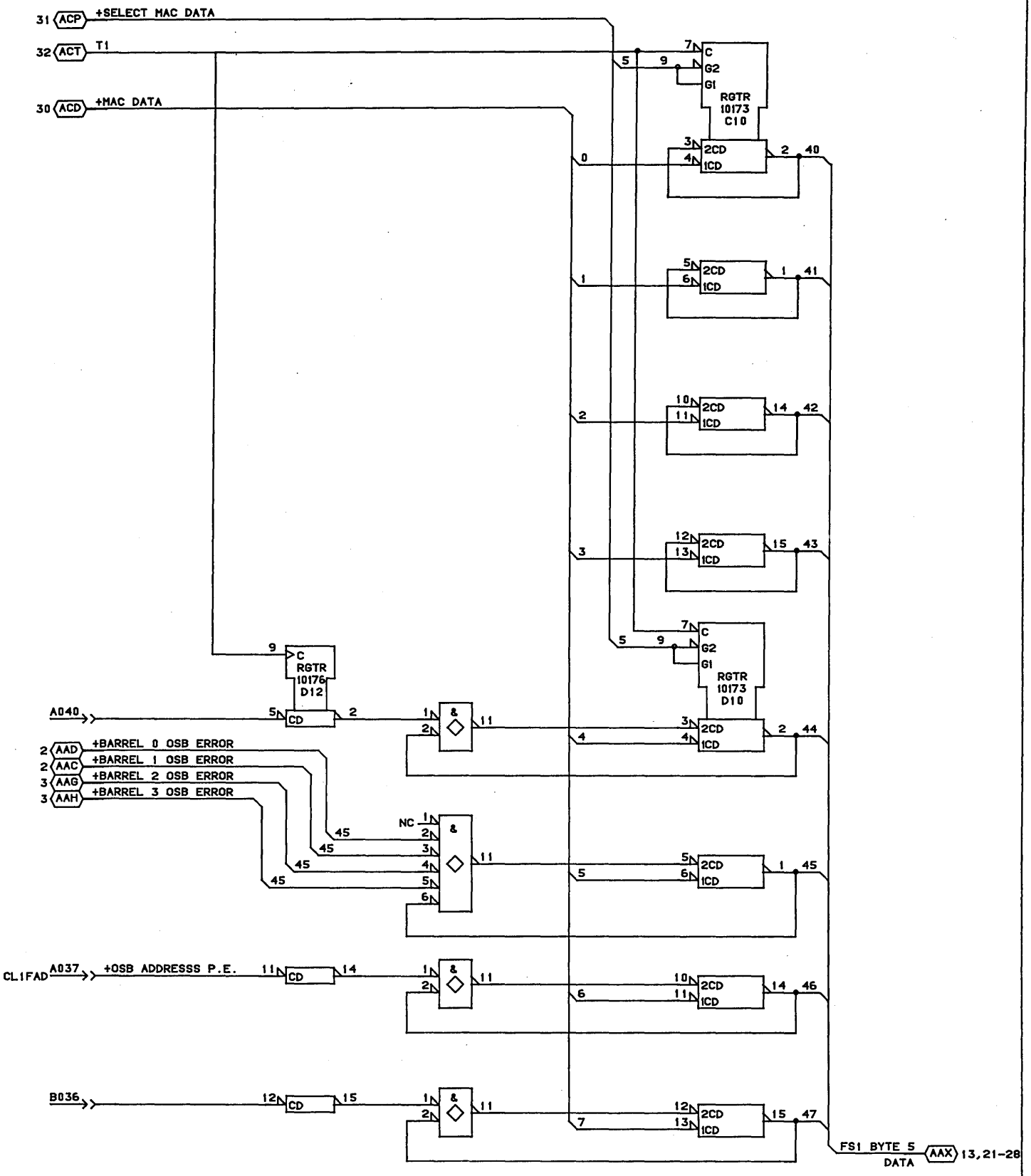

CONTROL DATA CANADA LTD	FS1 BYTE 5 MODULE ASSEMBLY-210 PAK TYPE: 1CN0	C		A
		02-MAY-84	SHEET 09	LOC. D07

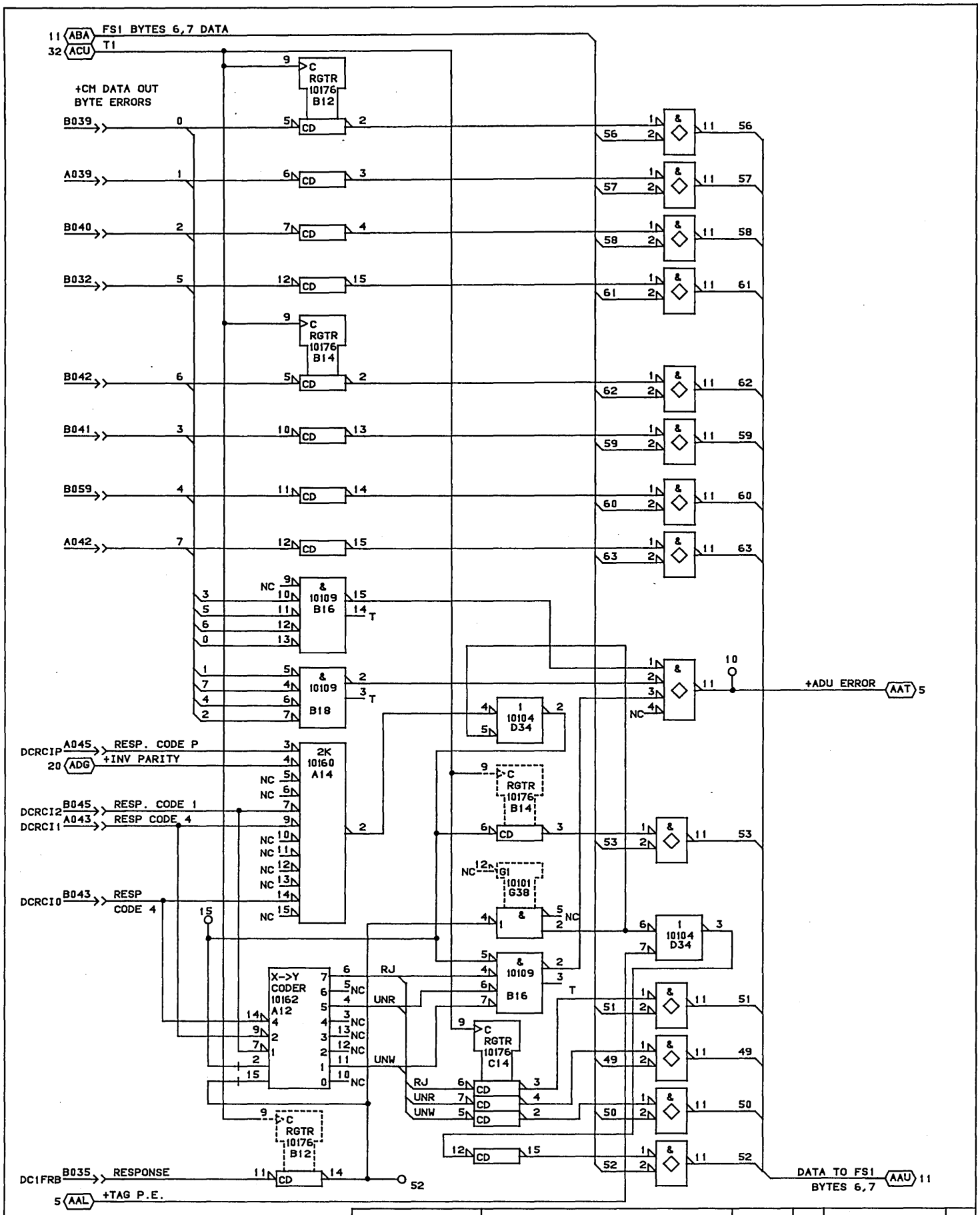
FS1 BYTES 6,7 DATA
T1
+CM DATA OUT
BYTE ERRORS
RGTR 10176 B12
RGTR 10176 B14
CD
&
10109 B16
10109 B18
1 10104 D34
2K 10160 A14
RESP. CODE P
+INV PARITY
RESP. CODE 1
RESP CODE 4
RESP CODE 4
X->Y CODER 10162 A12
RGTR 10176 B14
G1 10101 G38
RGTR 10176 C14
RGTR 10176 B12
RJ
UNR
UNW
RESPONSE
+TAG P.E.
+ADU ERROR
DATA TO FS1 BYTES 6,7
CONTROL DATA CANADA LTD
ERROR REPORTING FOR BYTES 6,7
MODULE ASSEMBLY-210 PAK
TYPE: 1CN0
02-MAY-84
SHEET 10(A)
LOC. D07

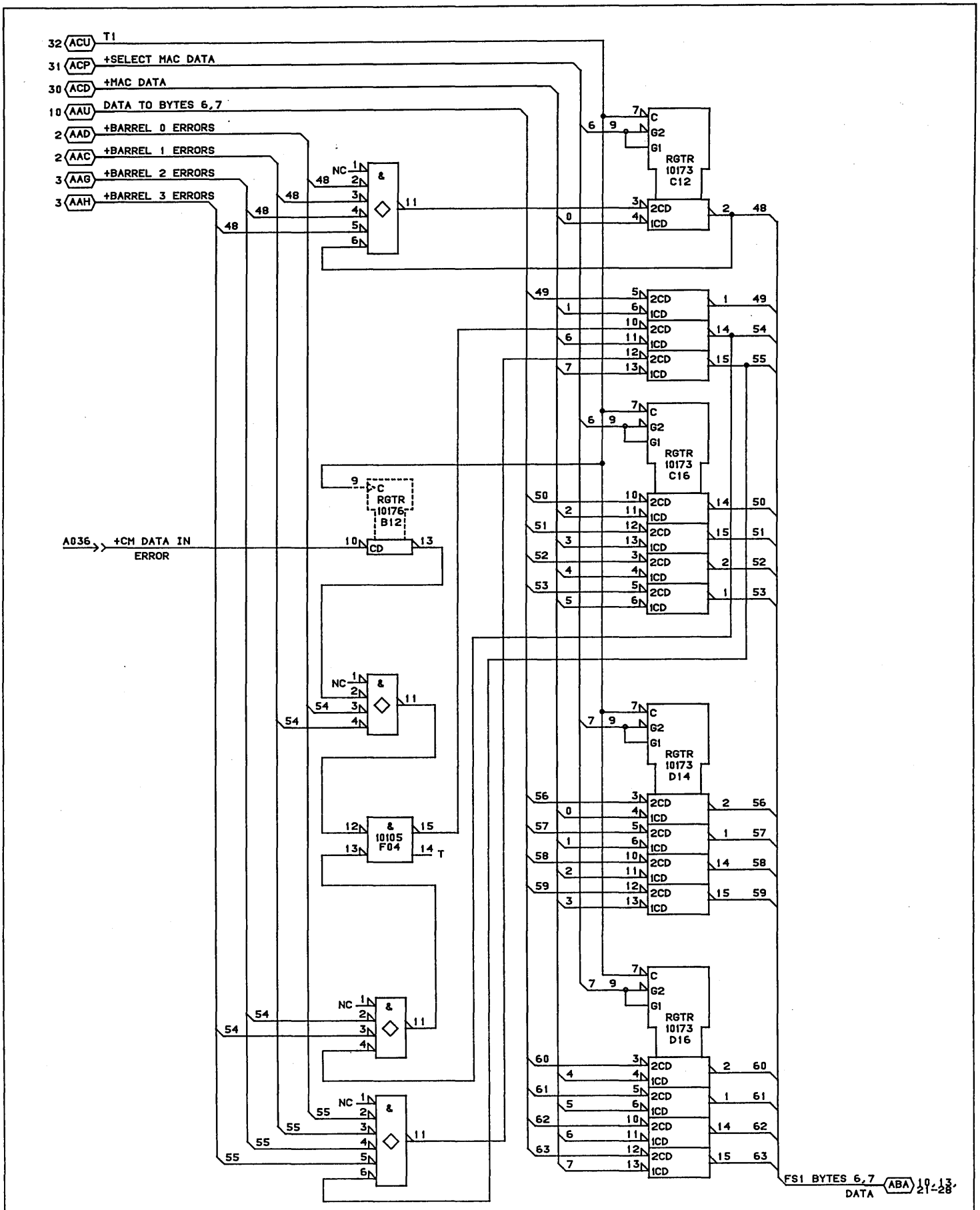

CONTROL DATA CANADA LTD	FS1 BYTES 6,7 MODULE ASSEMBLY-210 PAK TYPE: 1CN0	C		A
		02-MAY-84	SHEET 11(B)	LOC D07

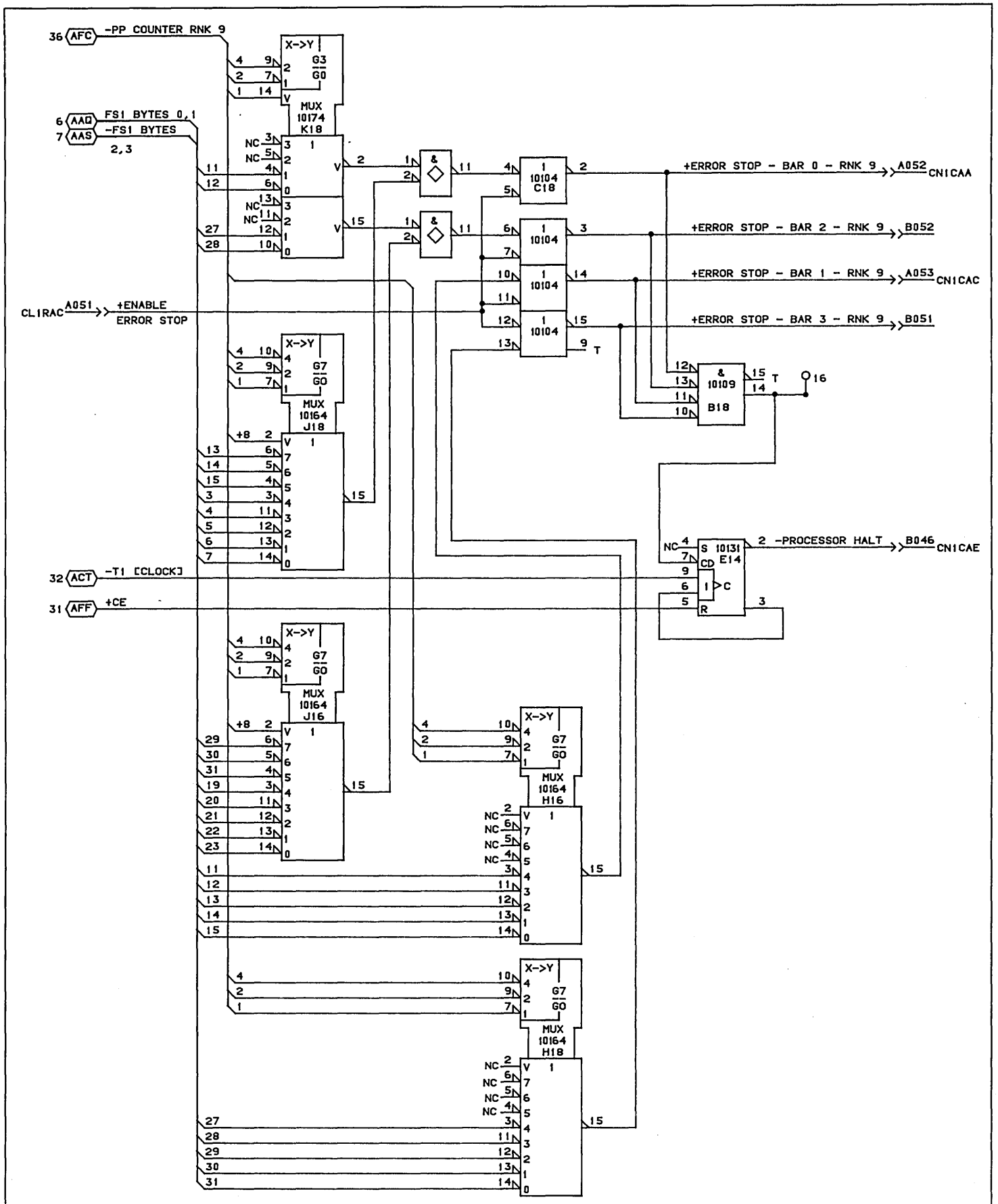

CONTROL DATA CANADA LTD	PP ERROR STOP GENERATOR 210 PAK ASSEMBLY TYPE: 1CN0	C		A
		02-MAY-84	SHEET 12 OF LOC. D07	

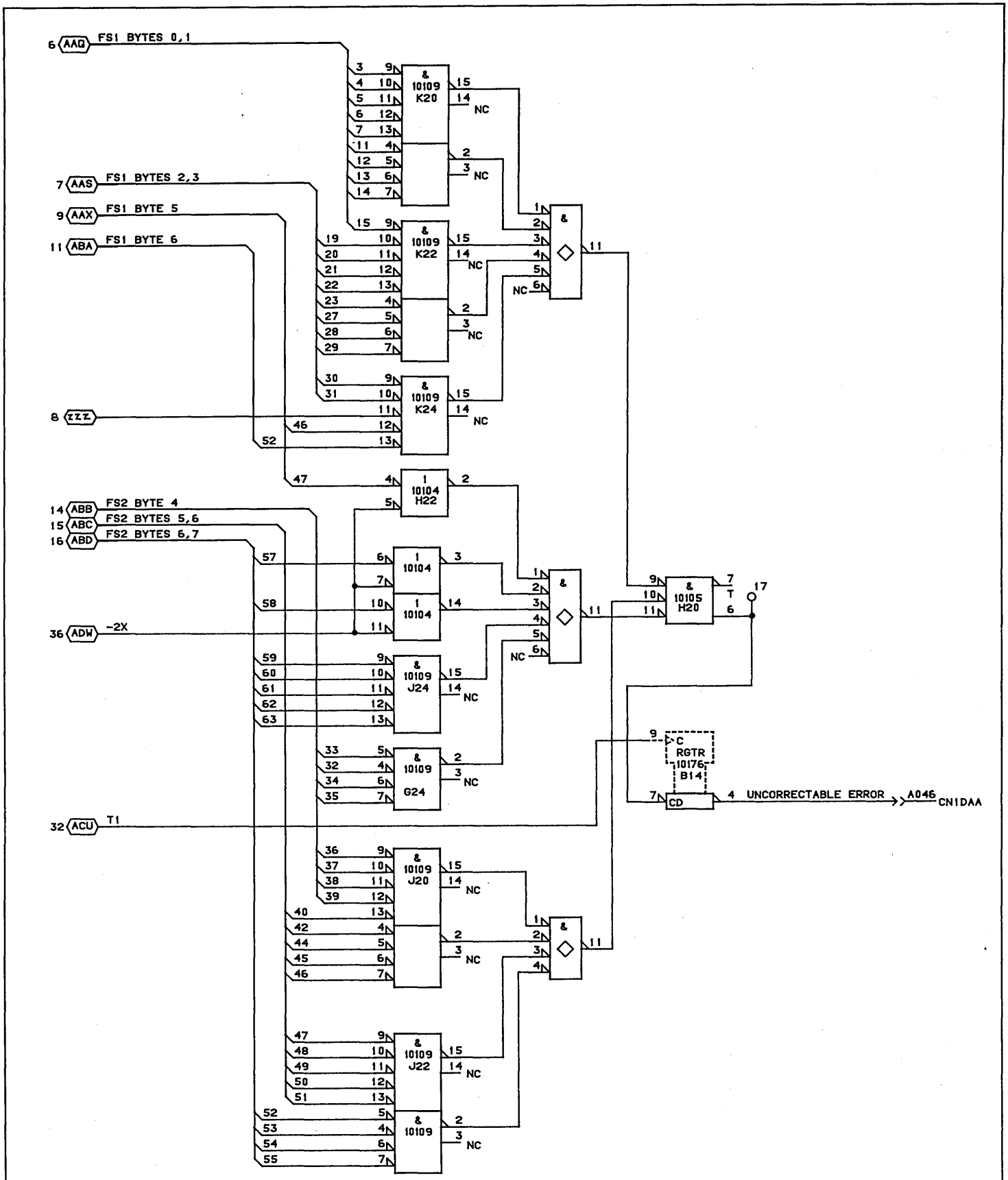

CONTROL DATA CANADA LTD	UNCORRECTABLE ERROR GENERATOR MODULE ASSEMBLY-210 PAK TYPE: 1CN0	C		A
		02-MAY-84	SHEET 13(D)	LOC. D07

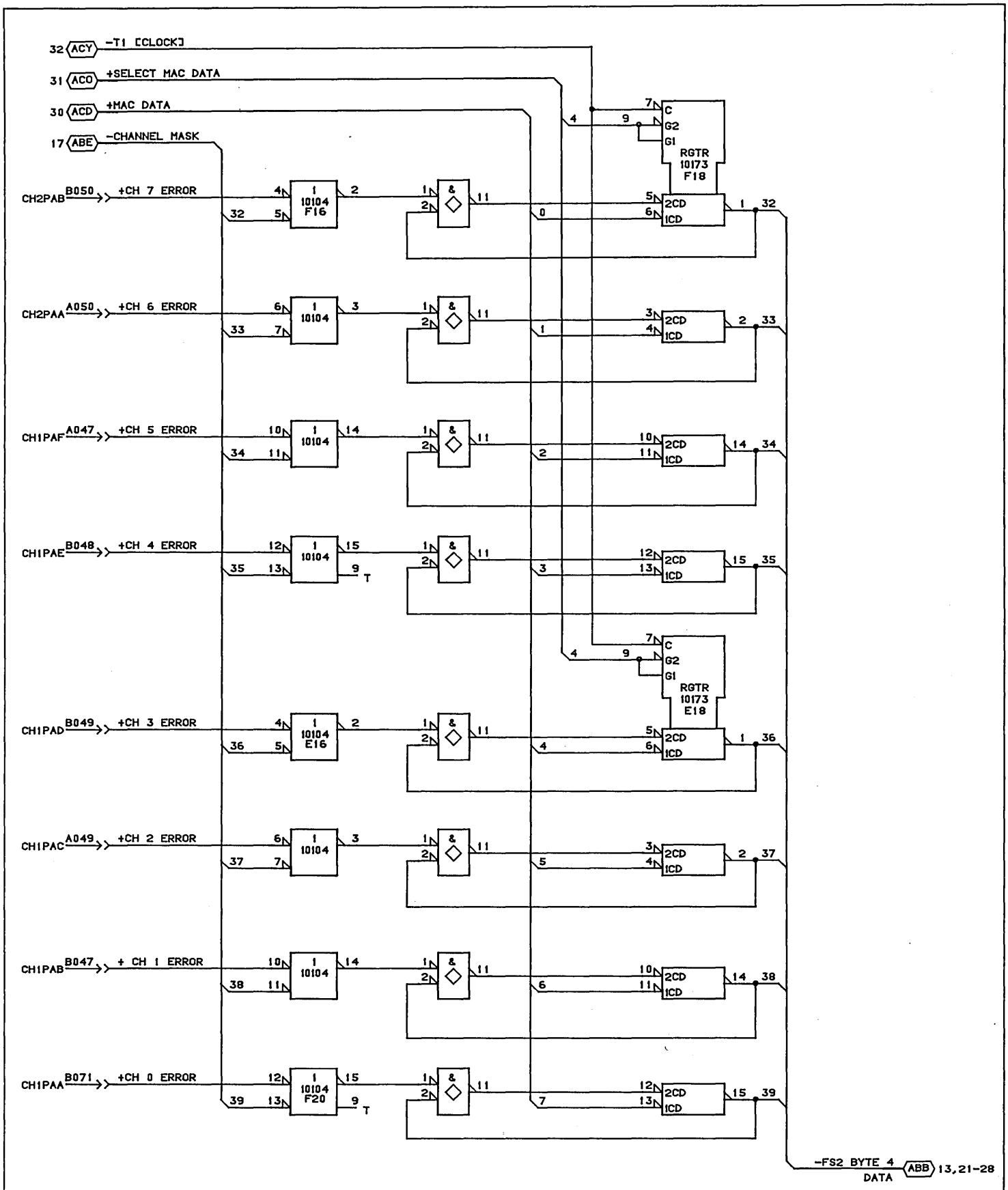

CONTROL DATA CANADA LTD	FS2 - BYTE 4 MODULE ASSY:210 PAK TYPE: 1CN0	C		A
		01-MAY-84	SHEET 14(E)	LOC. D07

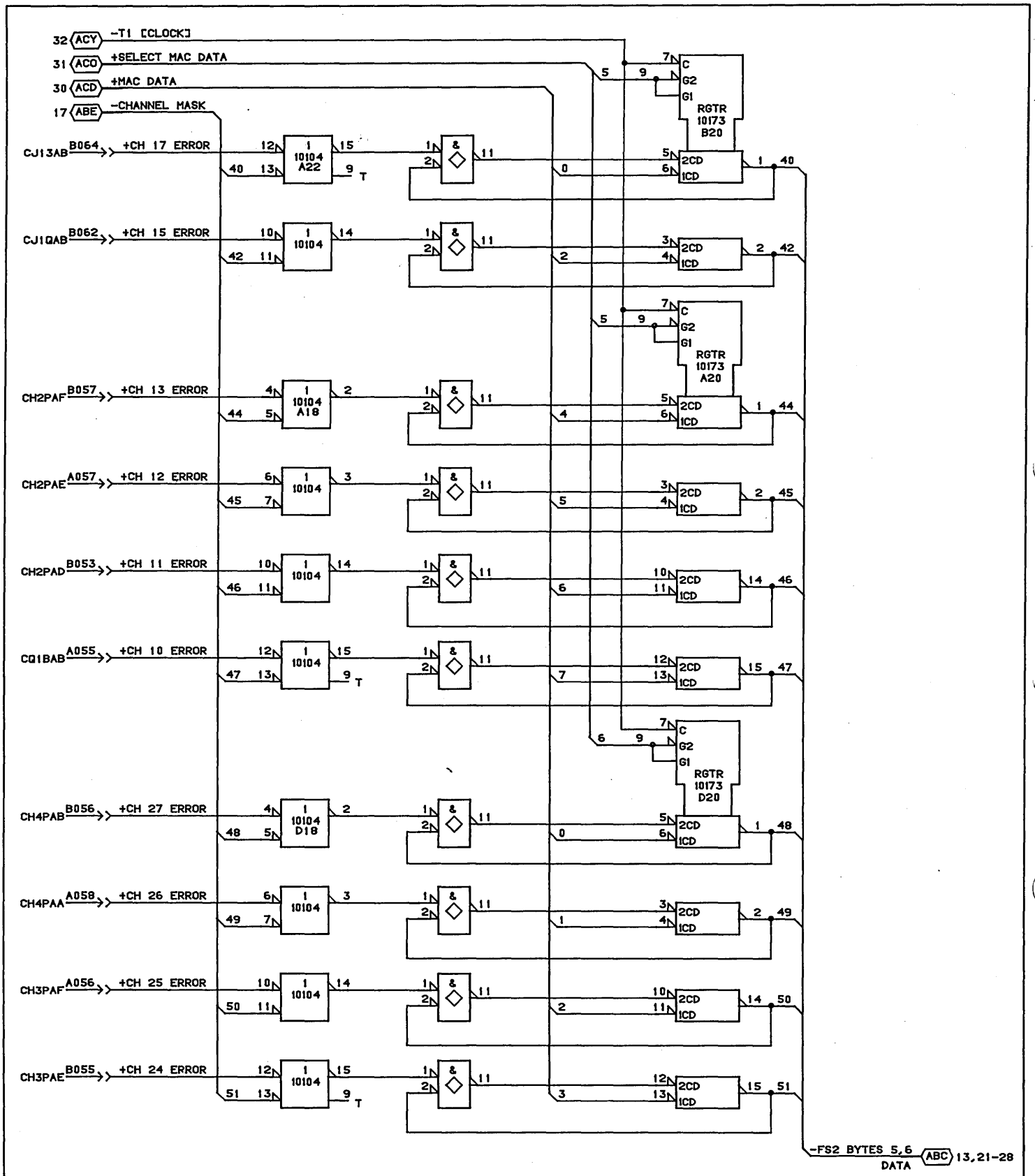

CONTROL DATA CANADA LTD	FS2 - BYTES 5&1/2 OF 6 MODULE ASSY:210 PAK TYPE: 1CN0	C		A
		01-MAY-84	SHEET 15	

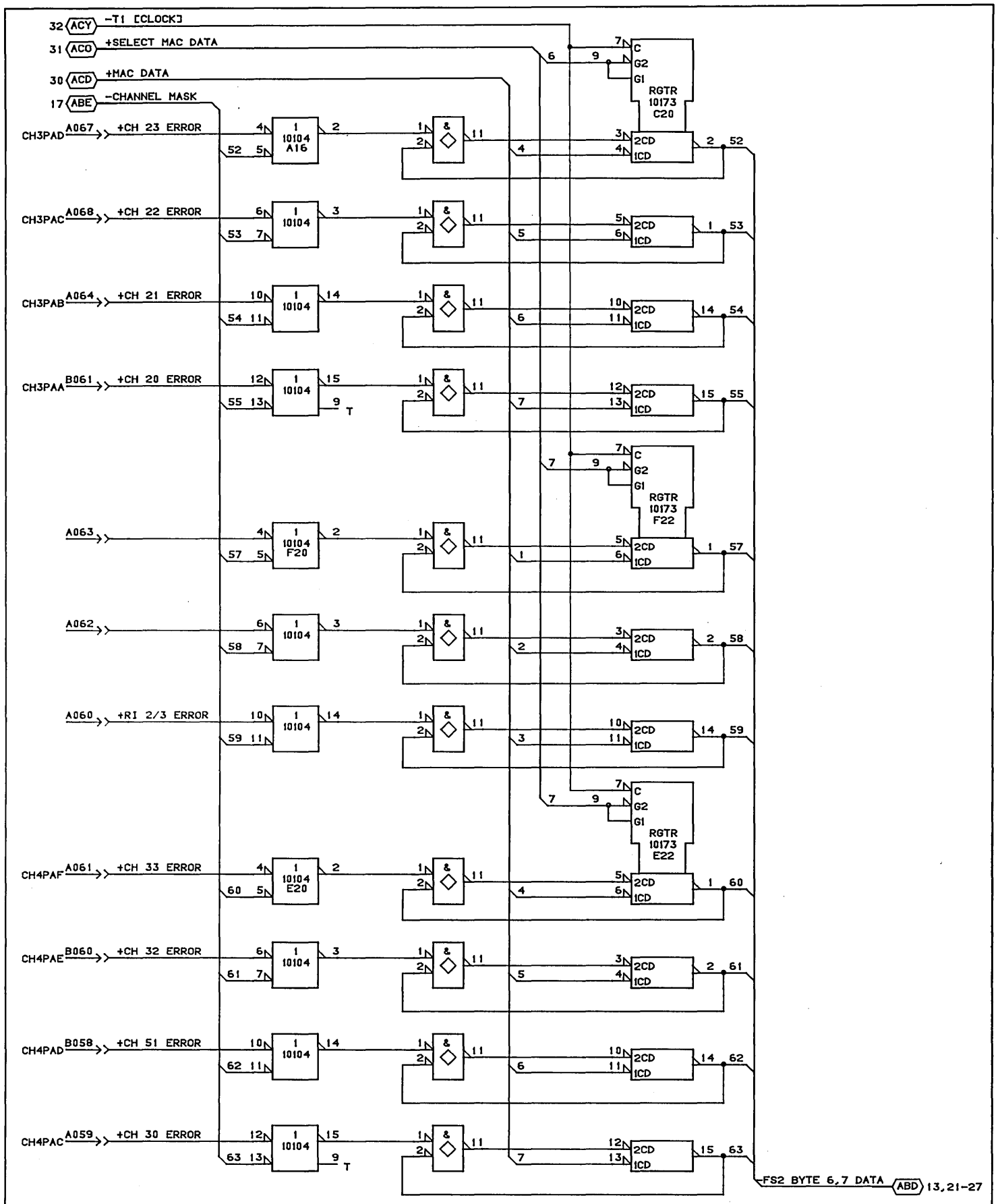

CONTROL DATA CANADA LTD	FS2 1/2 OF BYTE 6 & BYTE 7 MODULE ASSY:210 PAK TYPE:1CN0	C		A
		01-MAY-84	SHEET 16	

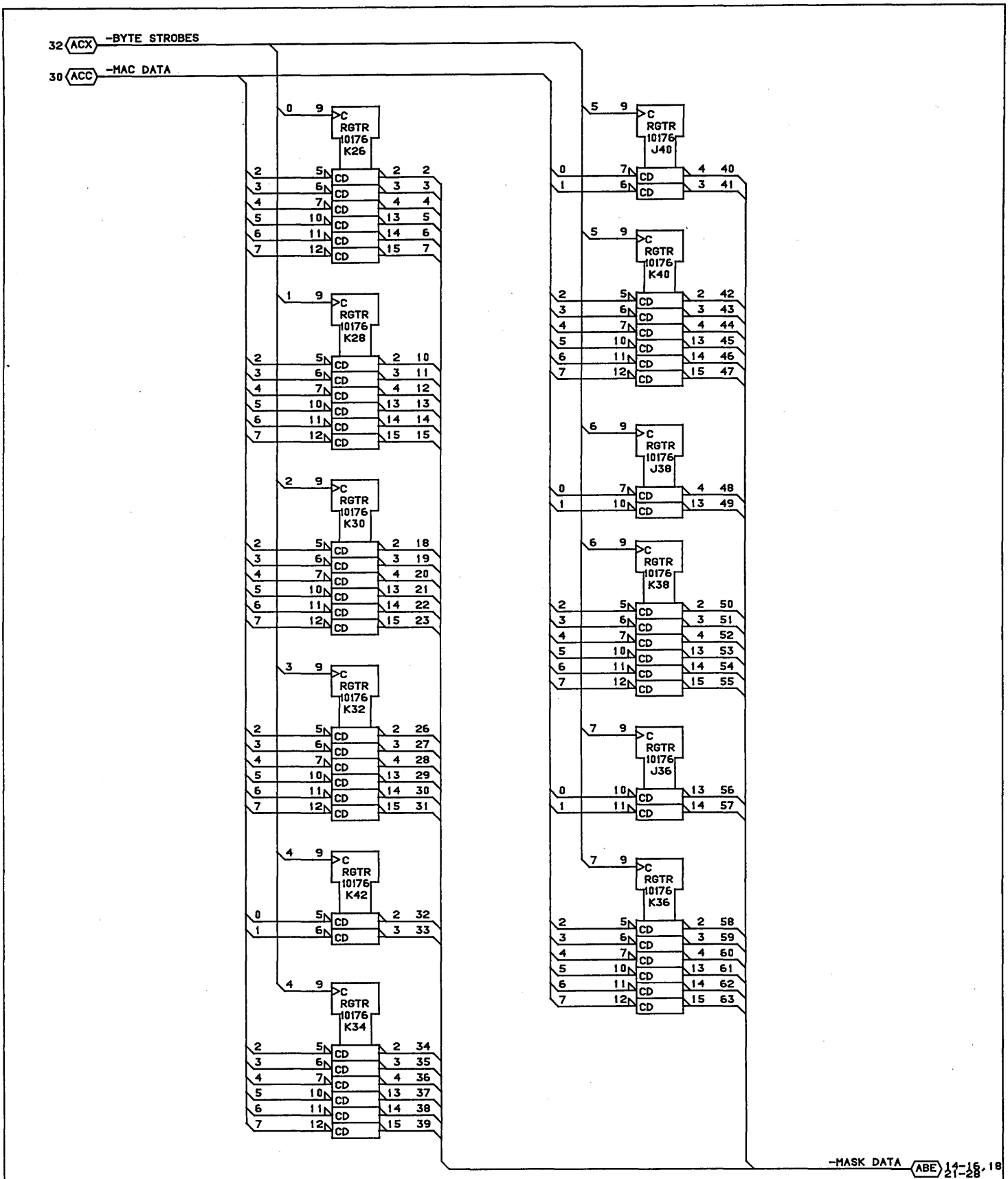

CONTROL DATA CANADA LTD	MASK REGISTER MODULE ASSY:210 PAK TYPE: 1CN0	C		A
		01-MAY-84	SHEET 17	

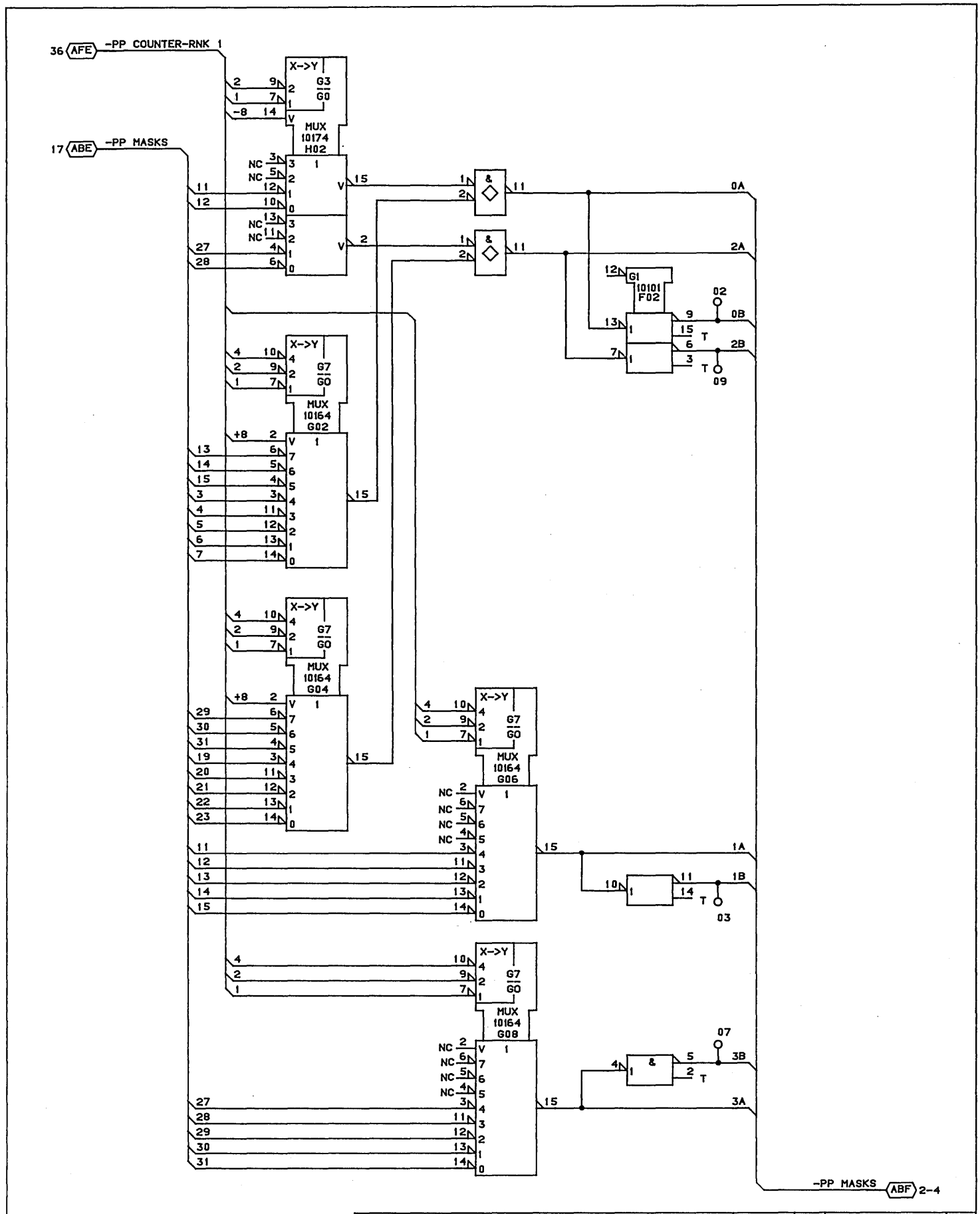

CONTROL DATA CANADA LTD	PP MASK GENERATOR MODULE ASSY:210 PAK TYPE:1CN0		C	A
		01-MAY-84	SHEET 18	

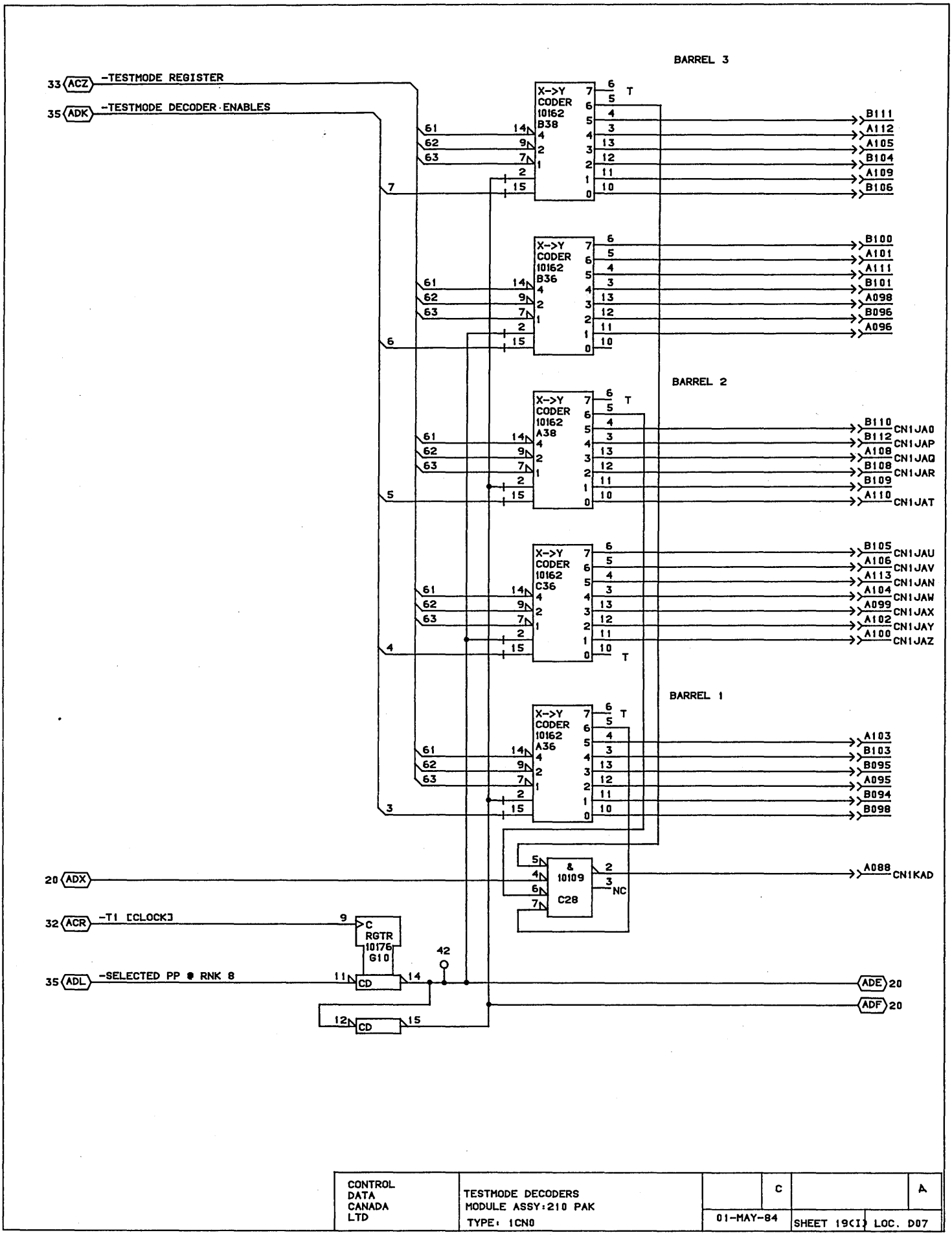

CONTROL DATA CANADA LTD	TESTMODE DECODERS MODULE ASSY:210 PAK TYPE: 1CN0	C		A
		01-MAY-84	SHEET 19(1)	LOC. D07

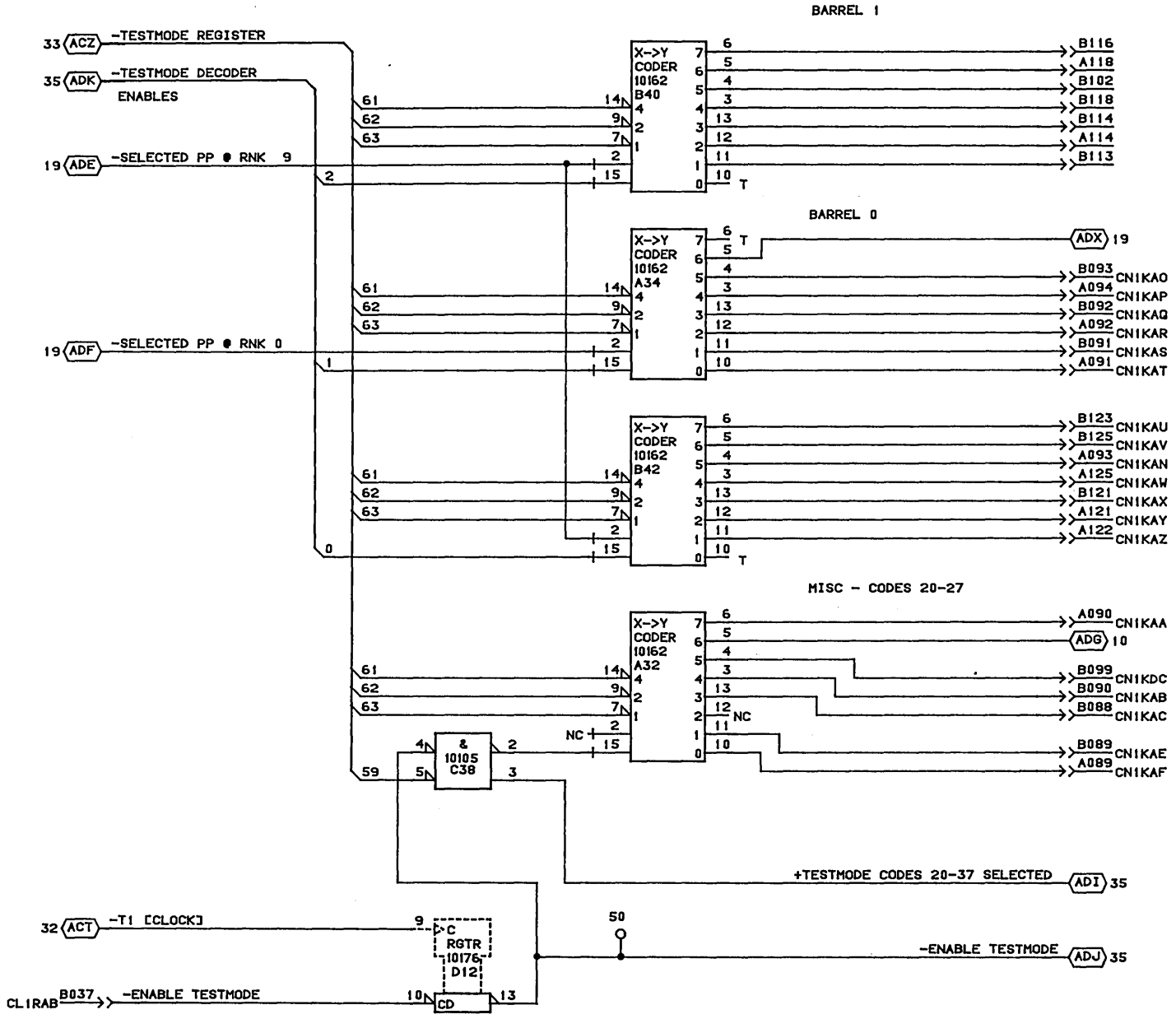

CONTROL DATA CANADA LTD	TESTMODE DECODERS MODULE ASSY:210 PAK TYPE: 1CN0	C		A
		02-MAY-84	SHEET 20	

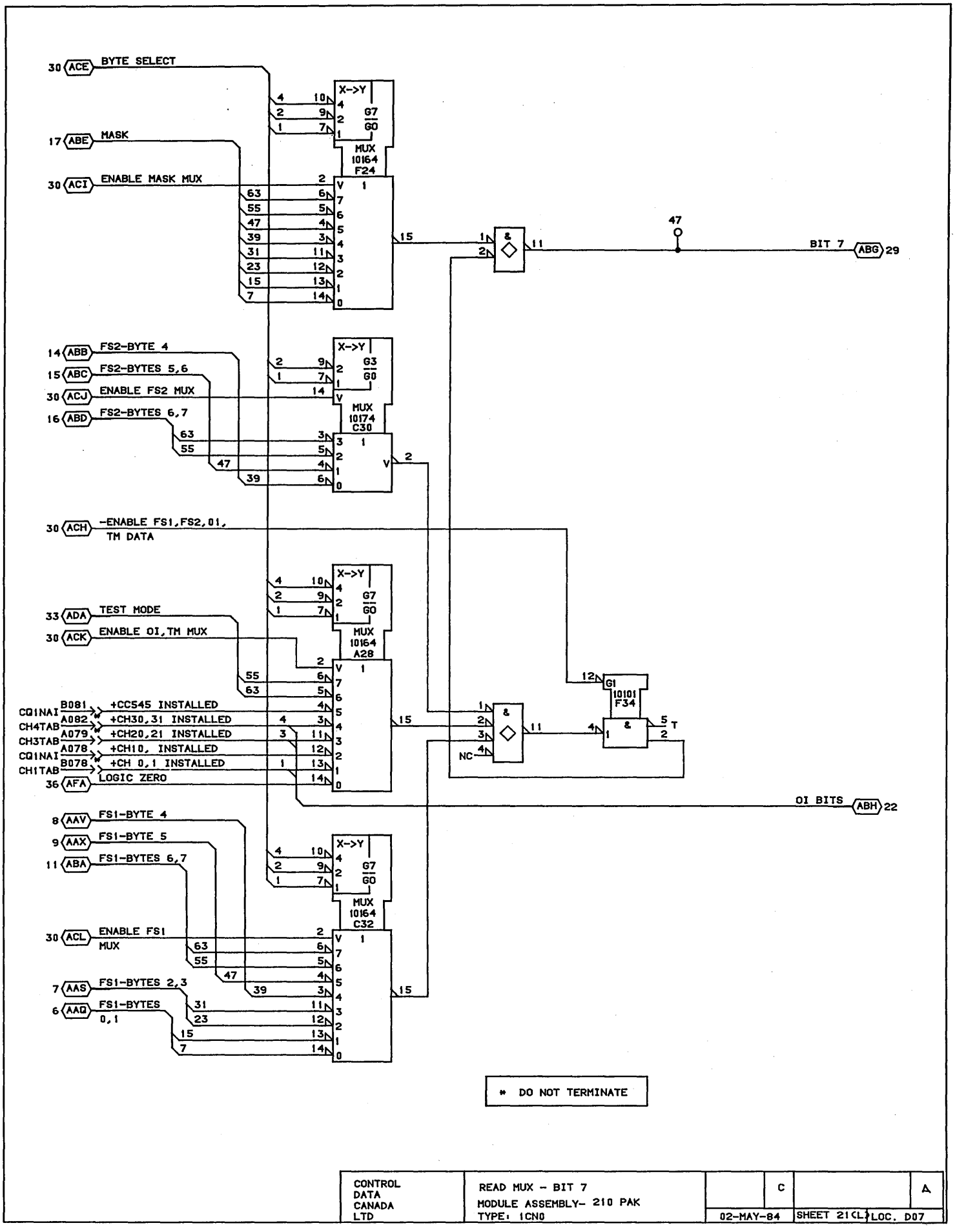

CONTROL DATA CANADA LTD	READ MUX - BIT 7 MODULE ASSEMBLY- 210 PAK TYPE: 1CN0	C		A
		02-MAY-84	SHEET 21 (L)	LOC. D07

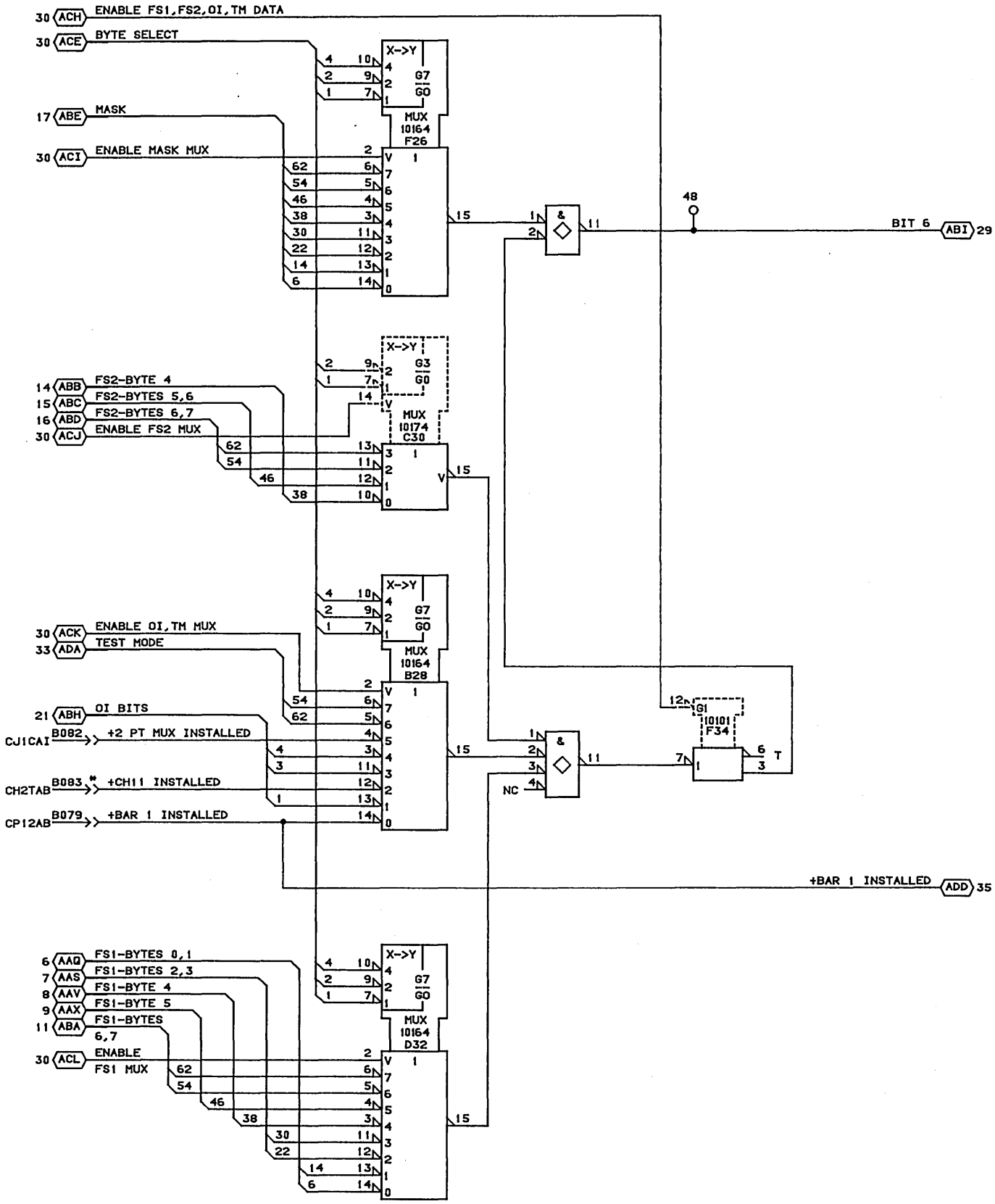

CONTROL DATA CANADA LTD	READ MUX - BIT 6 MODULE ASSEMBLY- 210 PAK TYPE: 1CN0		C	A
		02-MAY-84	SHEET 22(M)	LOC.D07

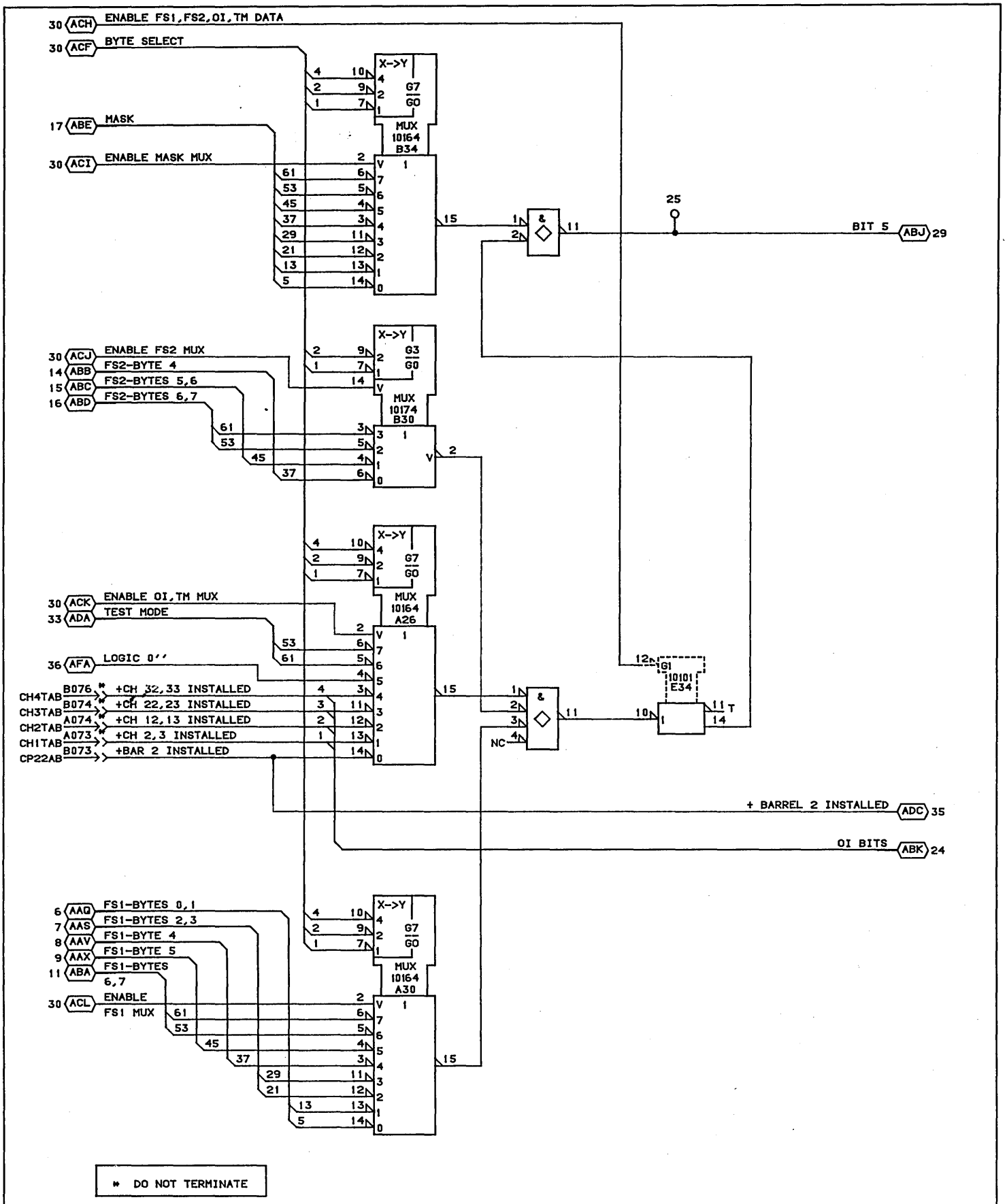

CONTROL DATA CANADA LTD	READ MUX - BIT 5 MODULE ASSEMBLY- 210 PAK TYPE: 1CN0	C		A
		02-MAY-84	SHEET 23(N)	LOC. D07

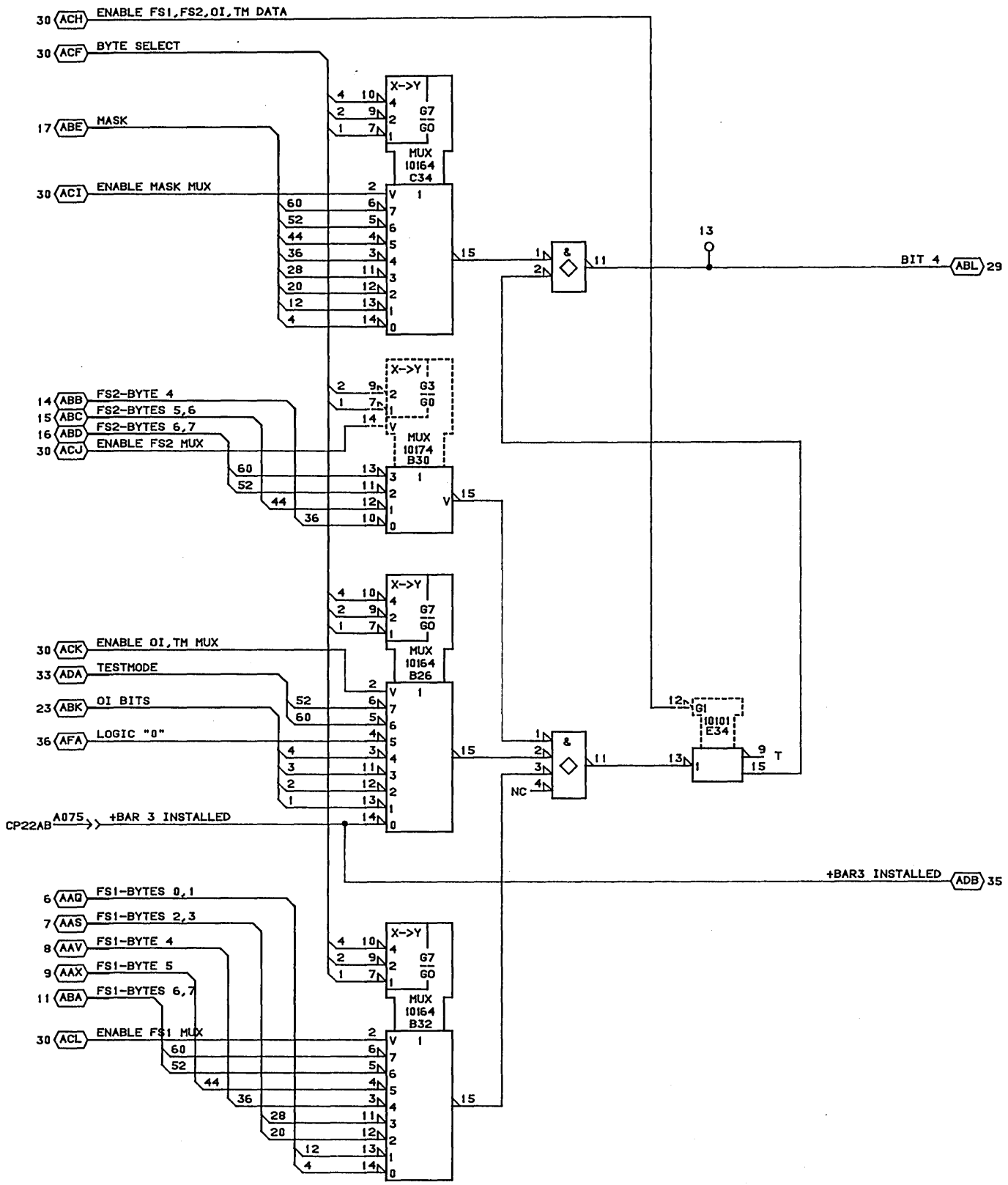

CONTROL DATA CANADA LTD	READ MUX - BIT 4 MODULE ASSEMBLY- 210 PAK TYPE: 1CN0	C		A
		02-MAY-84	SHEET 24(03)	LOC. D07

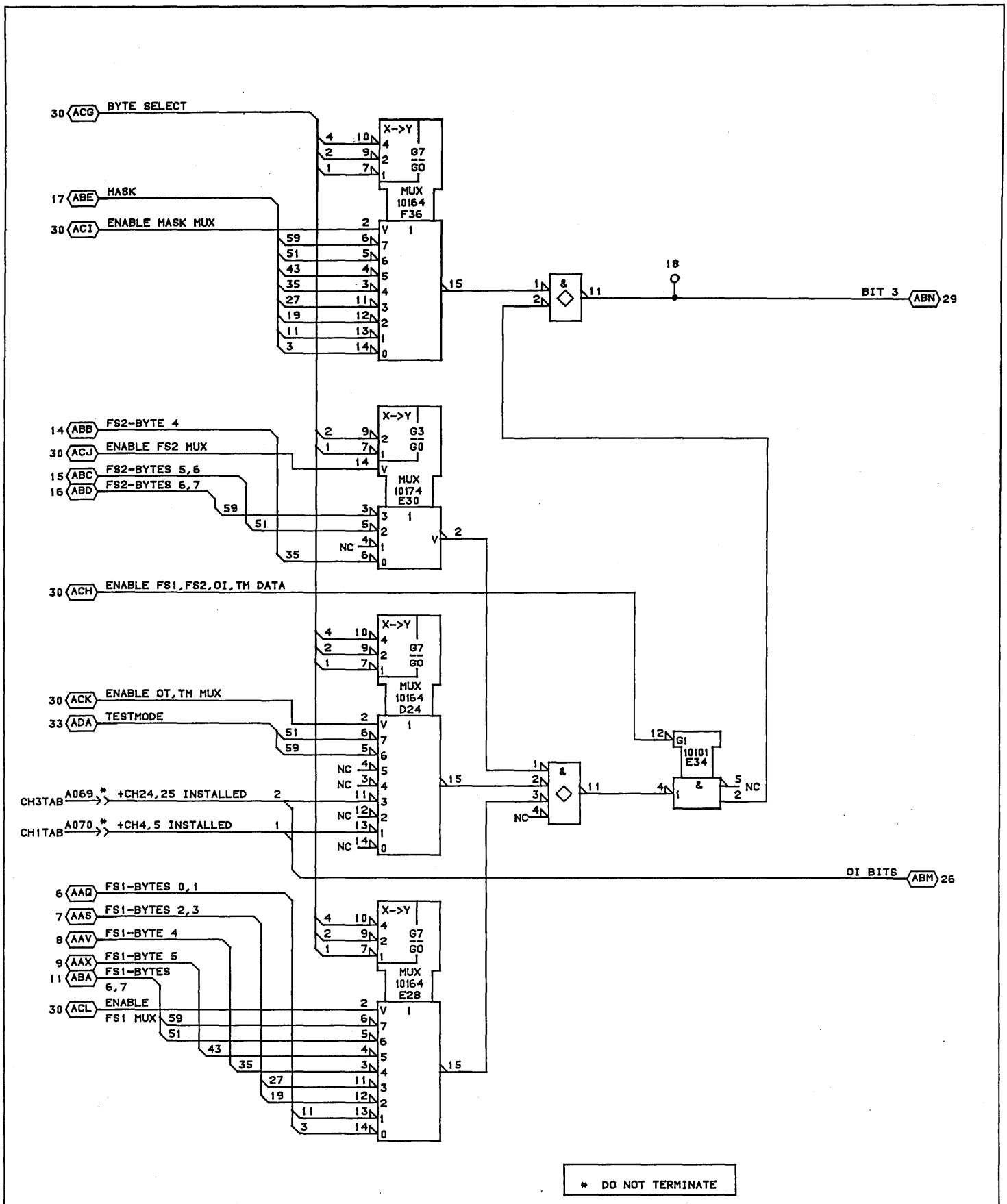

CONTROL DATA CANADA LTD	READ MUX - BIT 3 MODULE ASSEMBLY- 210 PAK TYPE: 1CN0	C		A
		02-MAY-84	SHEET 25(P)	LOC. D07

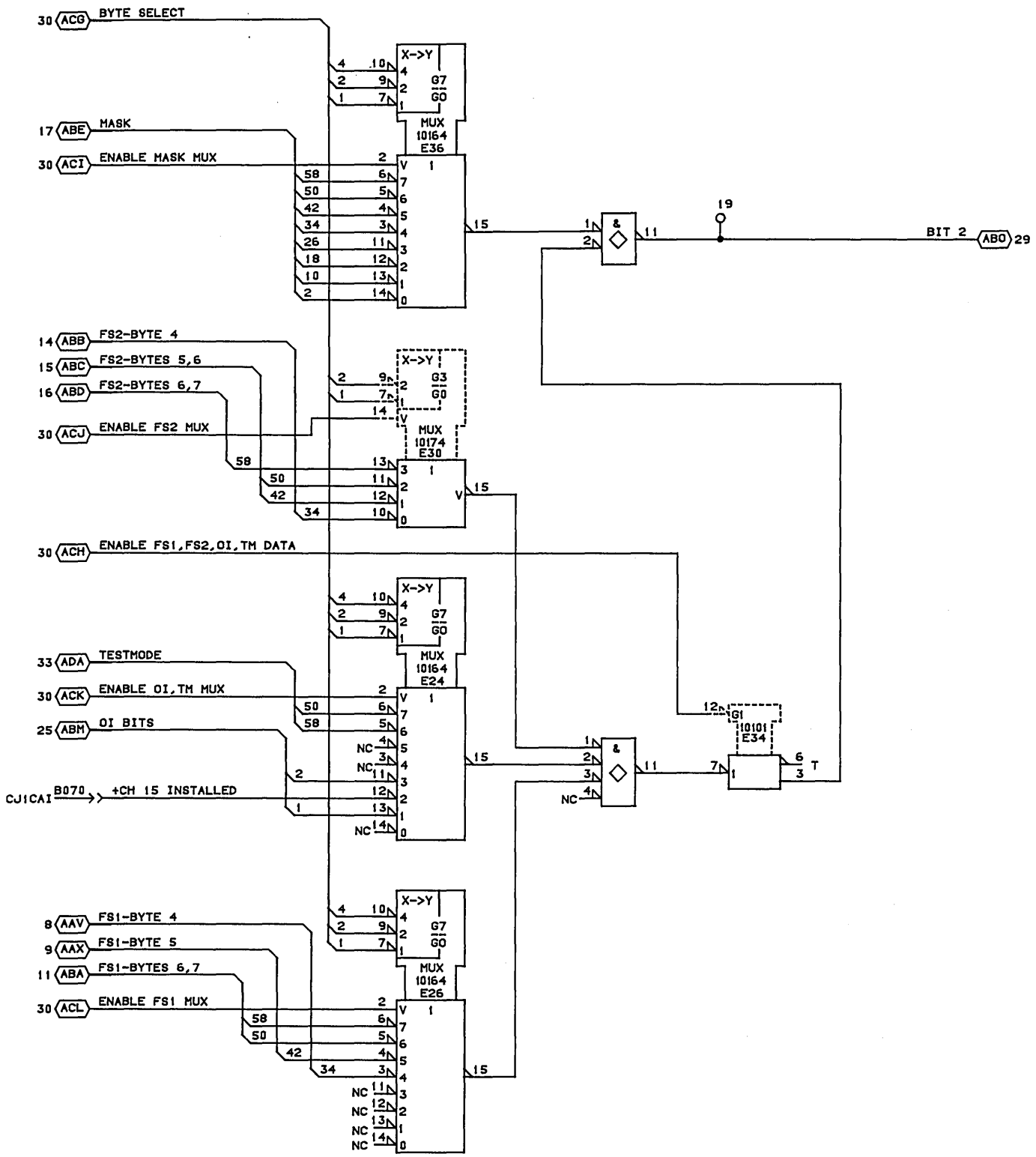

CONTROL DATA CANADA LTD	READ MUX - BIT 2 MODULE ASSEMBLY- 210 PAK TYPE: 1CN0	C		A
		02-MAY-84	SHEET 26(Q)	LOC. D07

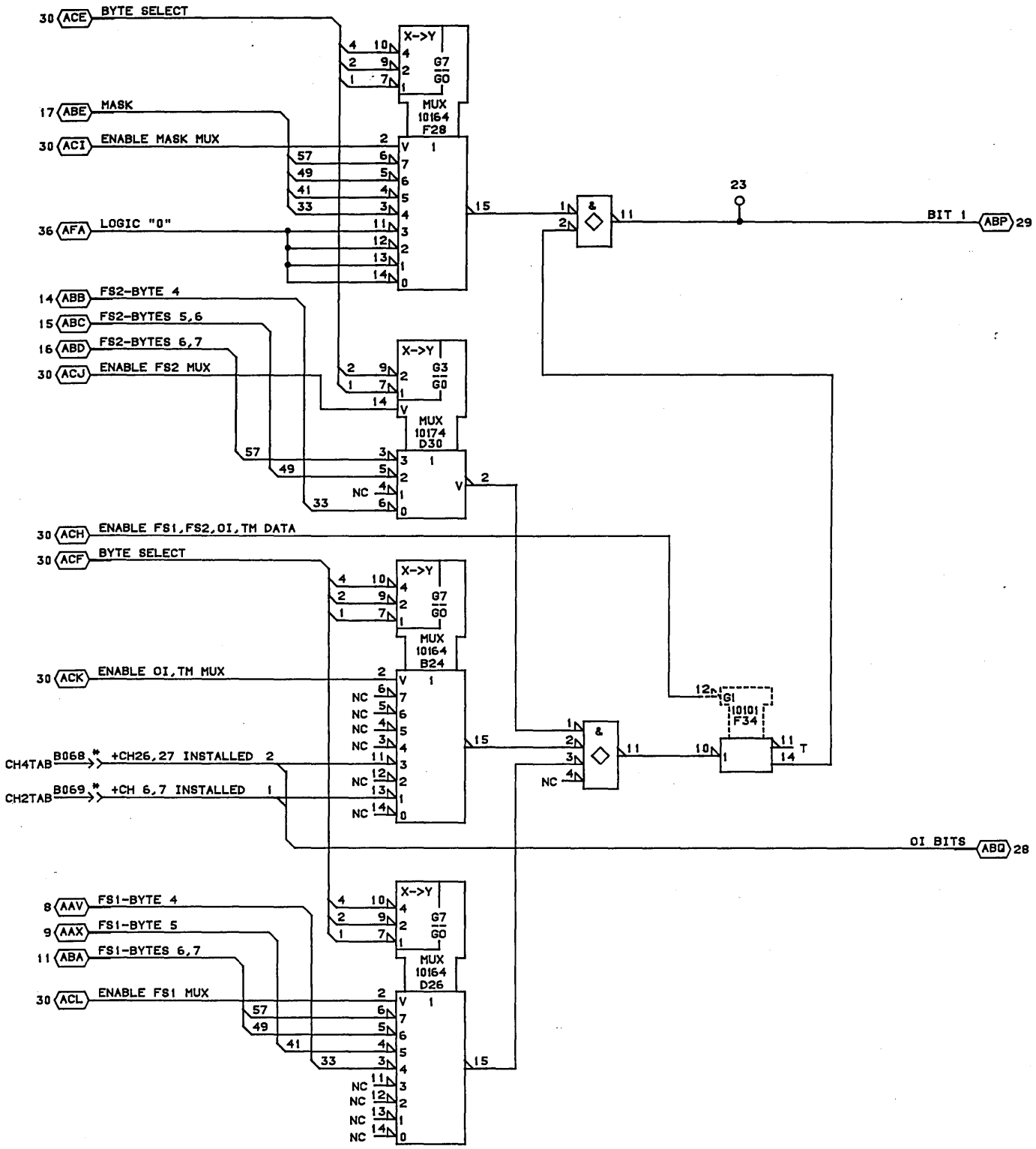

CONTROL DATA CANADA LTD	READ MUX - BIT 1 MODULE ASSEMBLY-210 PAK TYPE: 1CN0	C		A
		02-MAY-84	SHEET 27(R)	LOC. D07

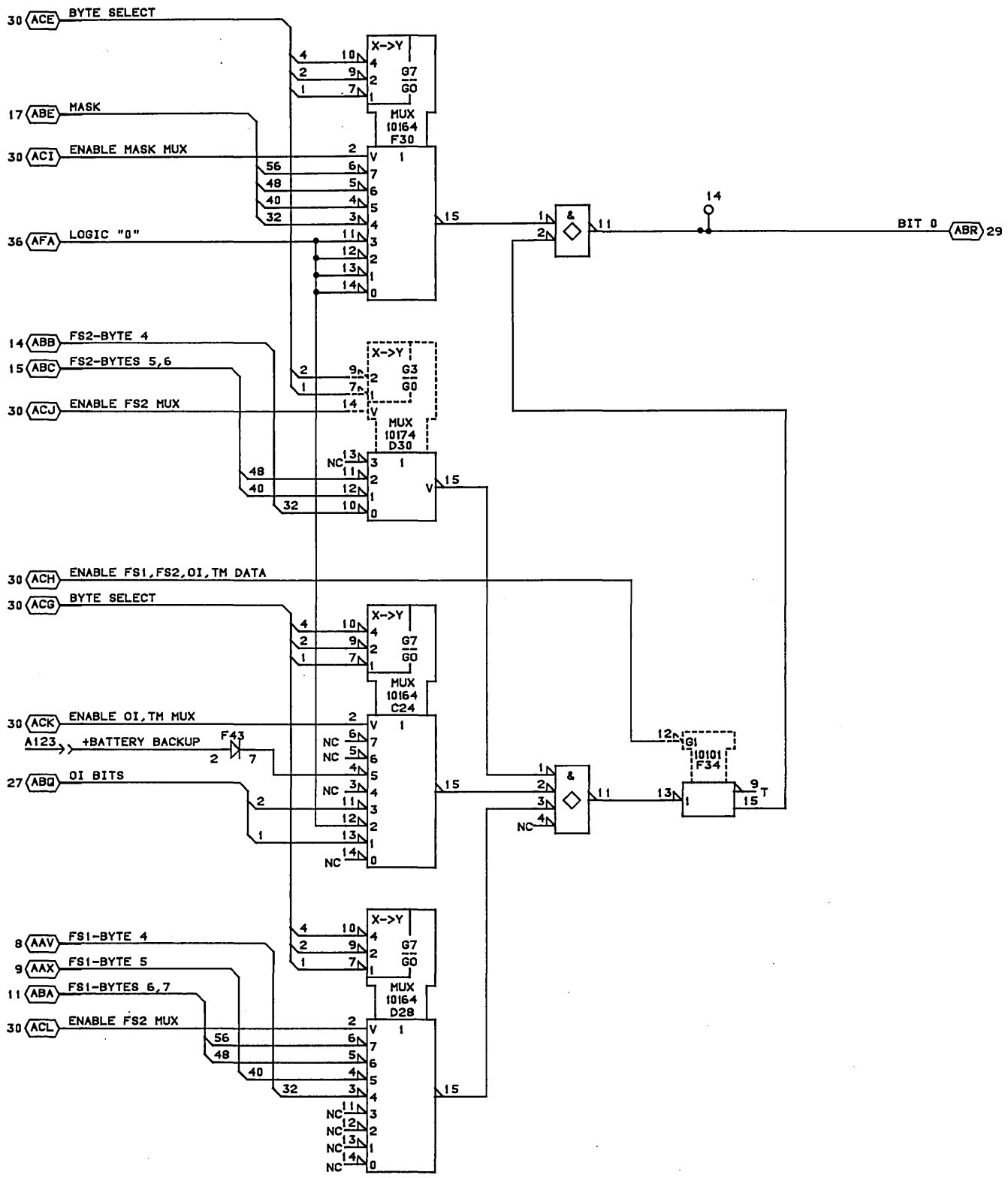

CONTROL DATA CANADA LTD	READ MUX - BIT 0 MODULE ASSEMBLY-210 PAK TYPE: 1CN0		C	A
		02-MAY-84	SHEET 28(S) LOC. D07	

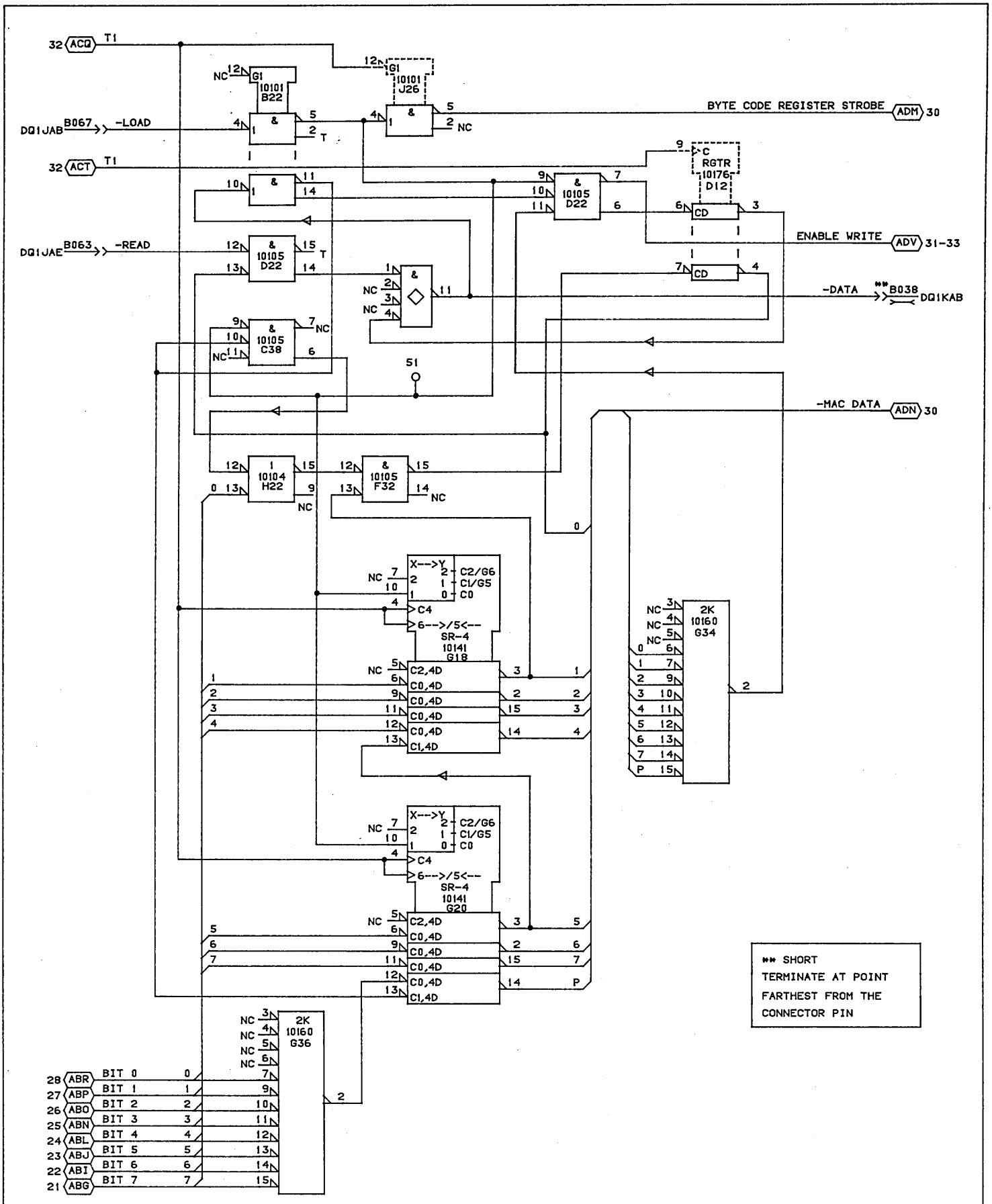

CONTROL DATA CANADA LTD	MAC INTERFACE MODULE ASSY:210 PAK TYPE: 1CN0	C		C
		04-MAR-86	SHEET 29	

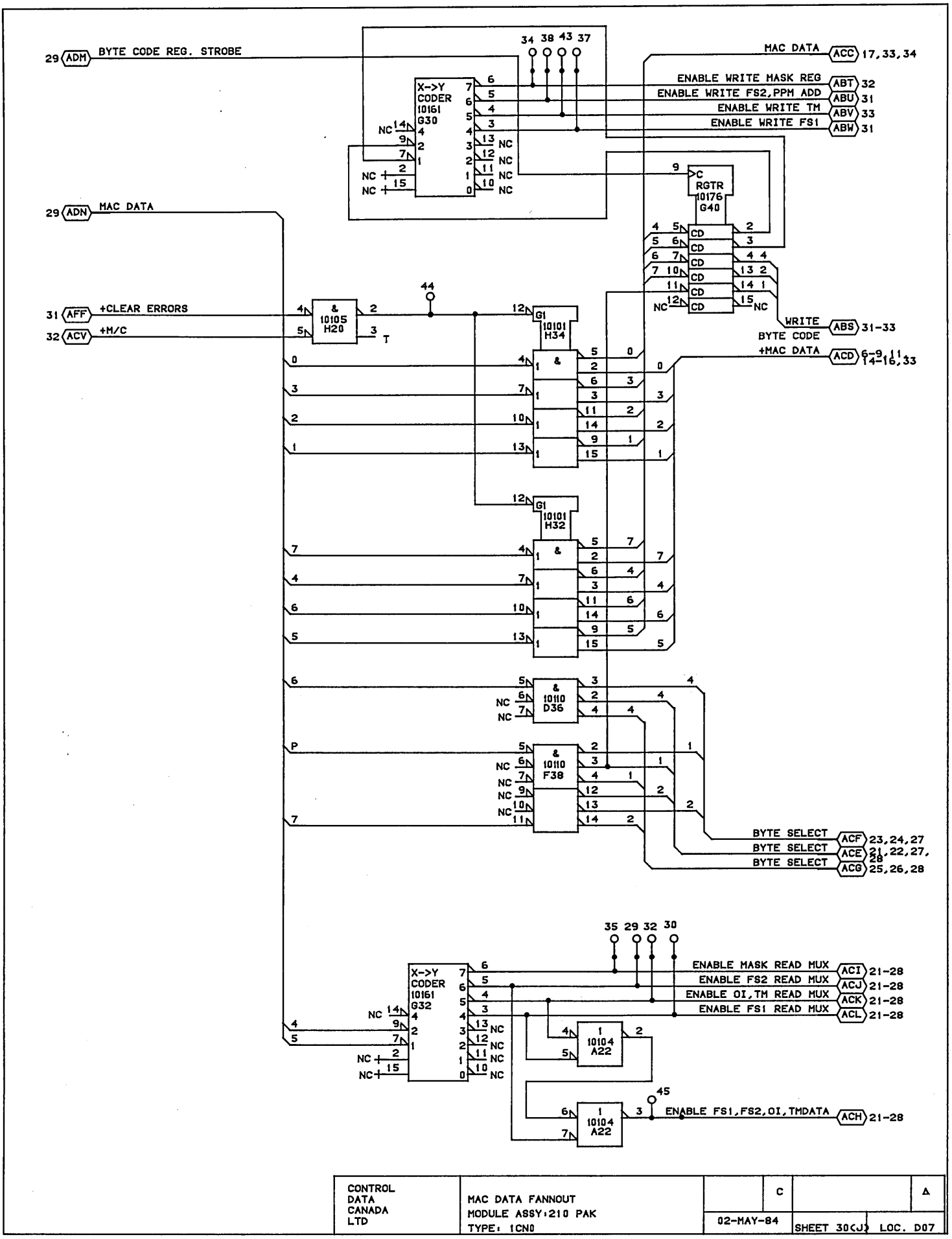

CONTROL DATA CANADA LTD	MAC DATA FANNOUT MODULE ASSY:210 PAK TYPE: 1CN0	C		A
		02-MAY-84	SHEET 30(J)	LOC. D07

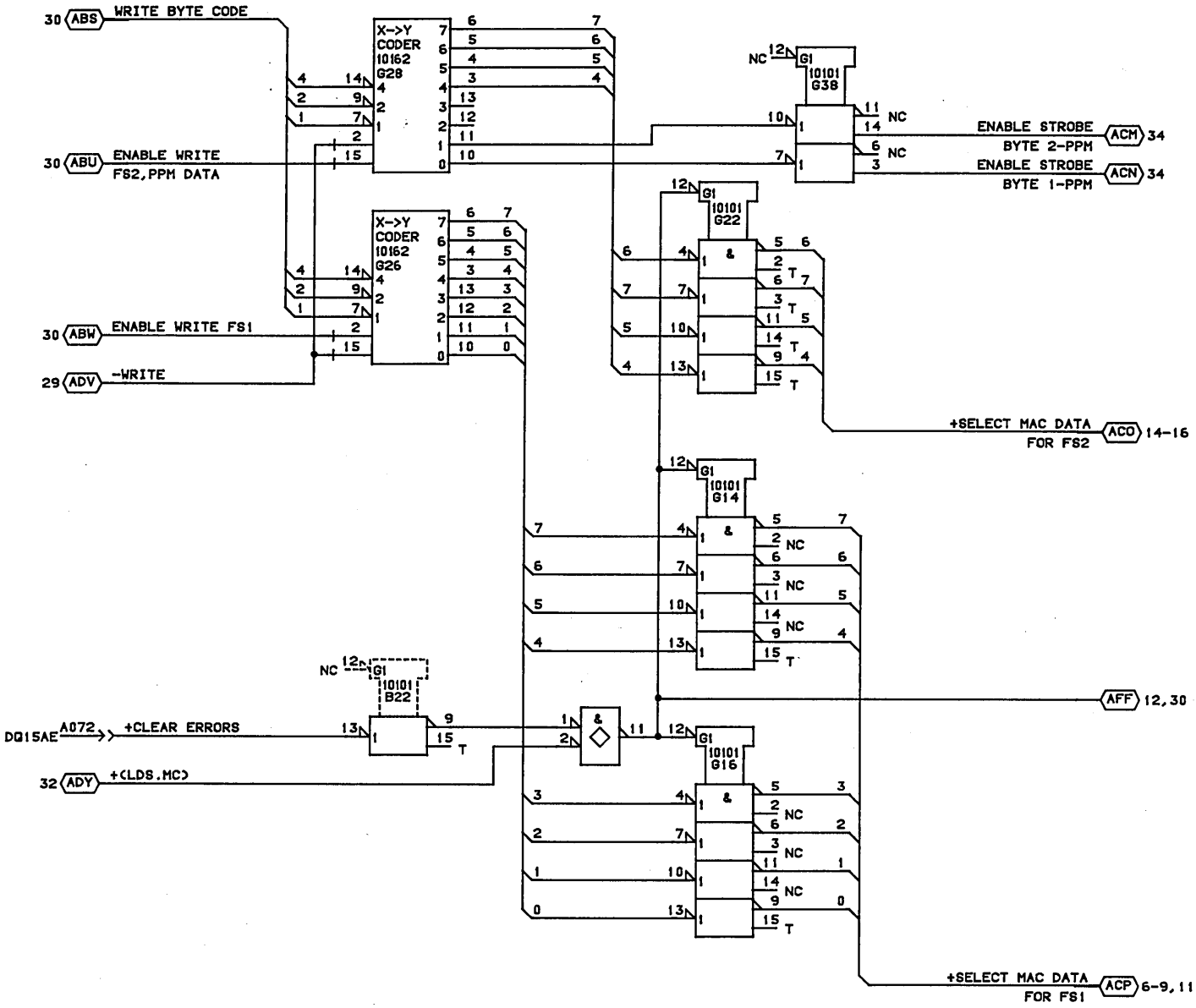

CONTROL DATA CANADA LTD	BYTE STROBE ENABLE DECODES FOR FS1,FS2,PPM ADDRESS MODULE ASSY:210 PAK TYPE: 1CN0	C		A
		02-MAY-84	SHEET 31<V> LOC. D07	

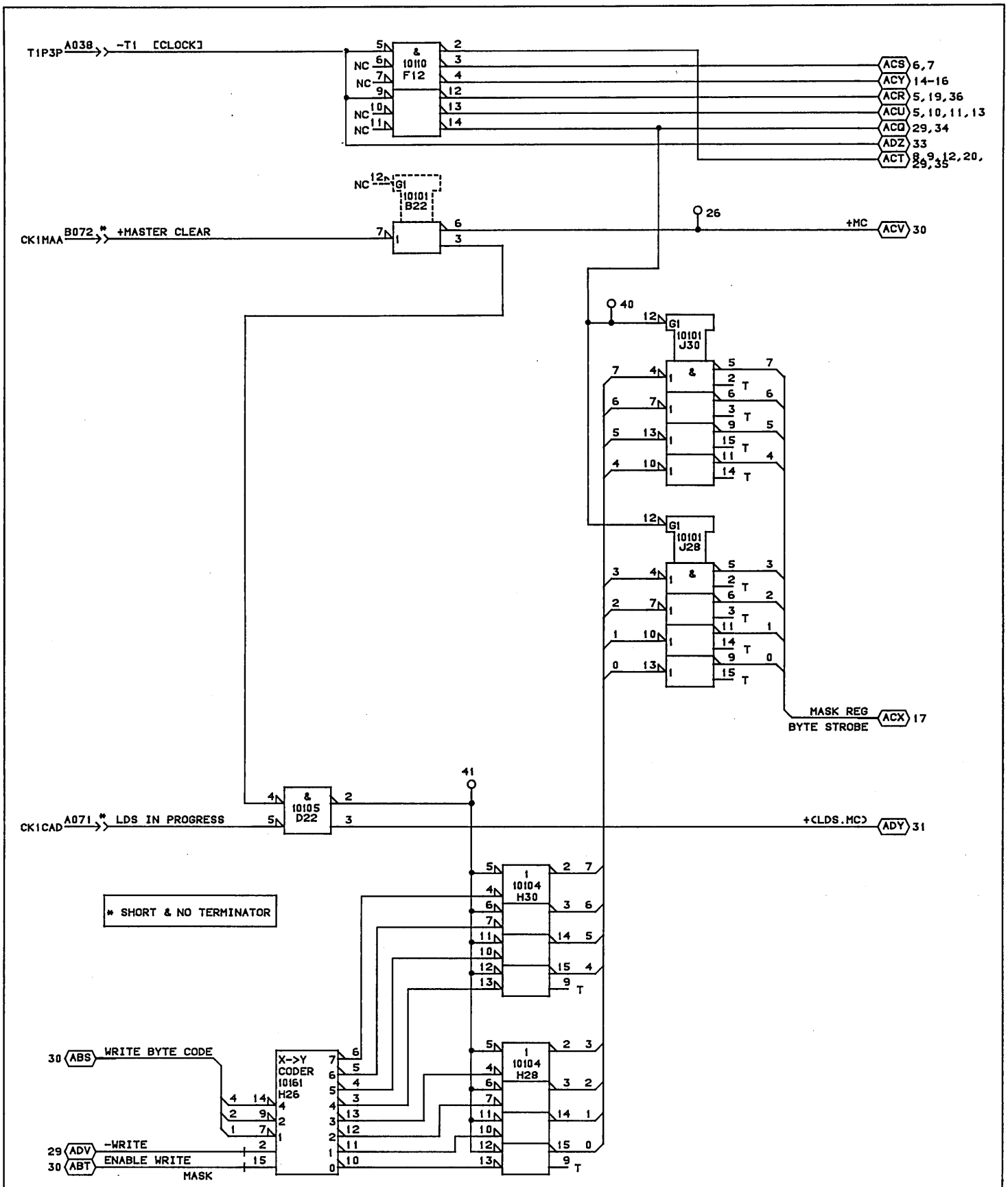

CONTROL DATA CANADA LTD	MASK REGISTER WRITE STROBE DECODES MODULE ASSY:210 PAK TYPE: 1CN0	C		A
		02-MAY-84	SHEET 32(W)	LOC. D07

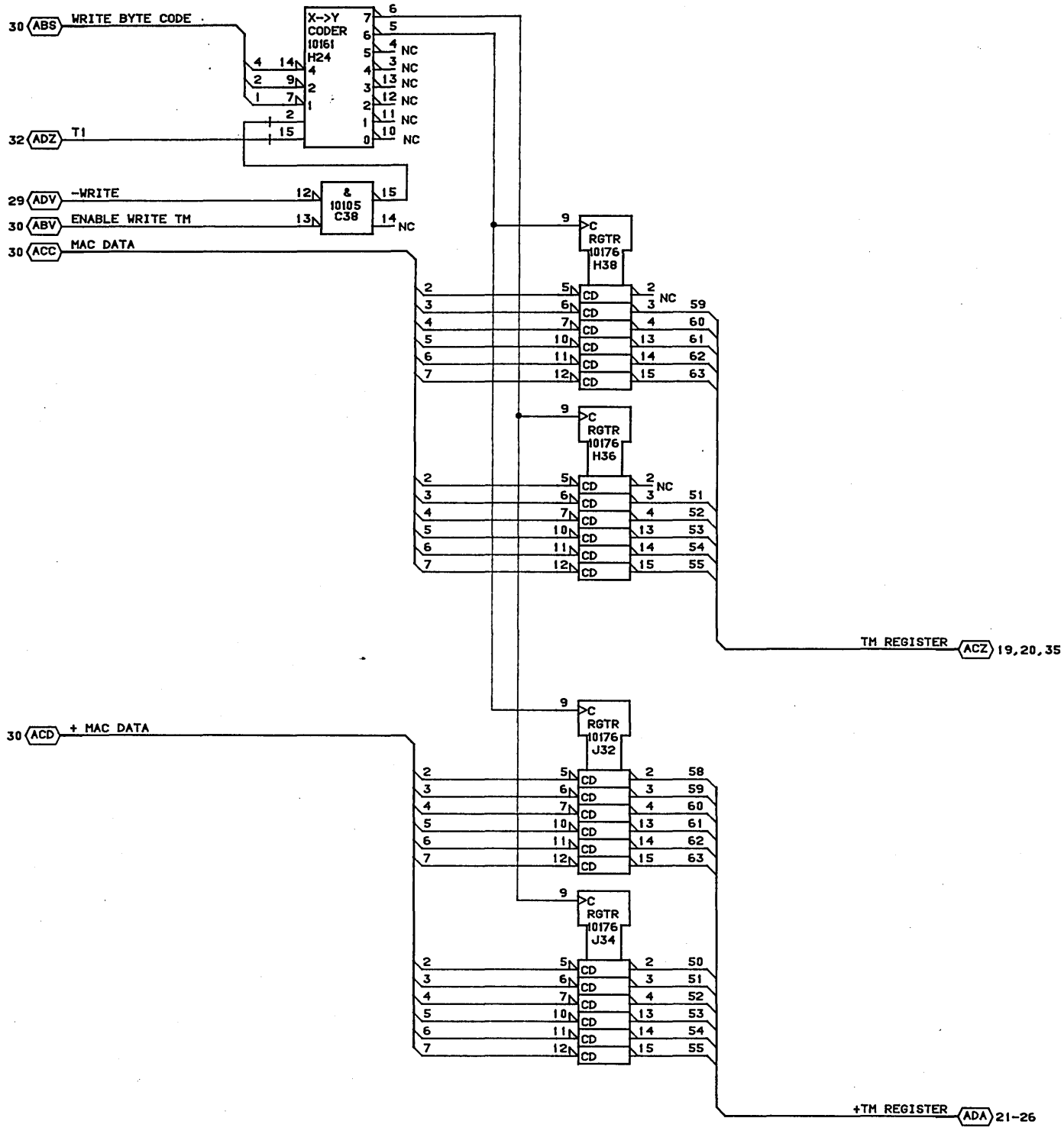

CONTROL DATA CANADA LTD	TEST MODE REGISTER MODULE ASSY:210 PAK TYPE: 1CN0	C		A
		02-MAY-84	SHEET 33	

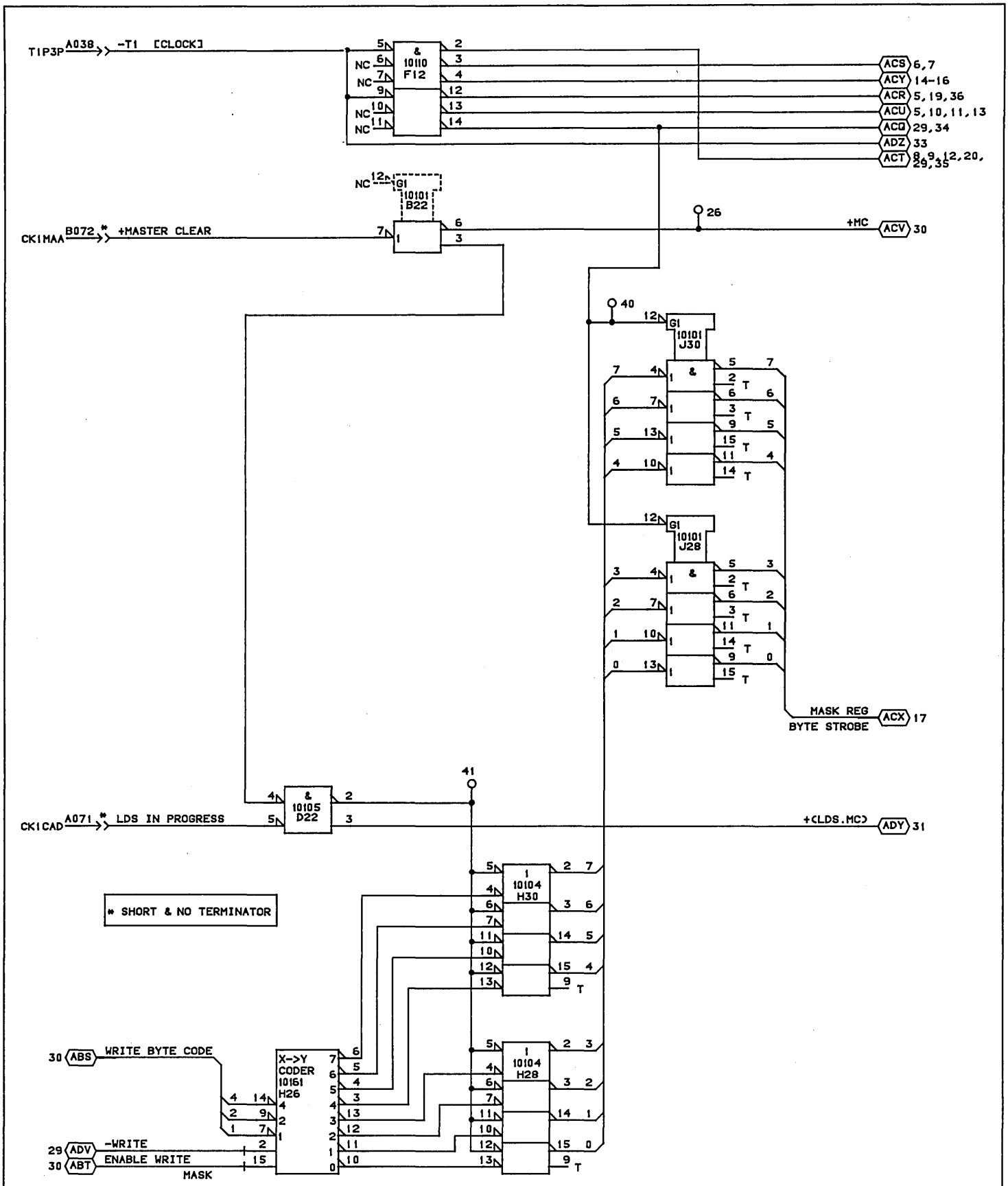

CONTROL DATA CANADA LTD	MASK REGISTER WRITE STROBE DECODES MODULE ASSY:210 PAK TYPE: 1CN0	C		A
		02-MAY-84	SHEET 32(W)	LOC. D07

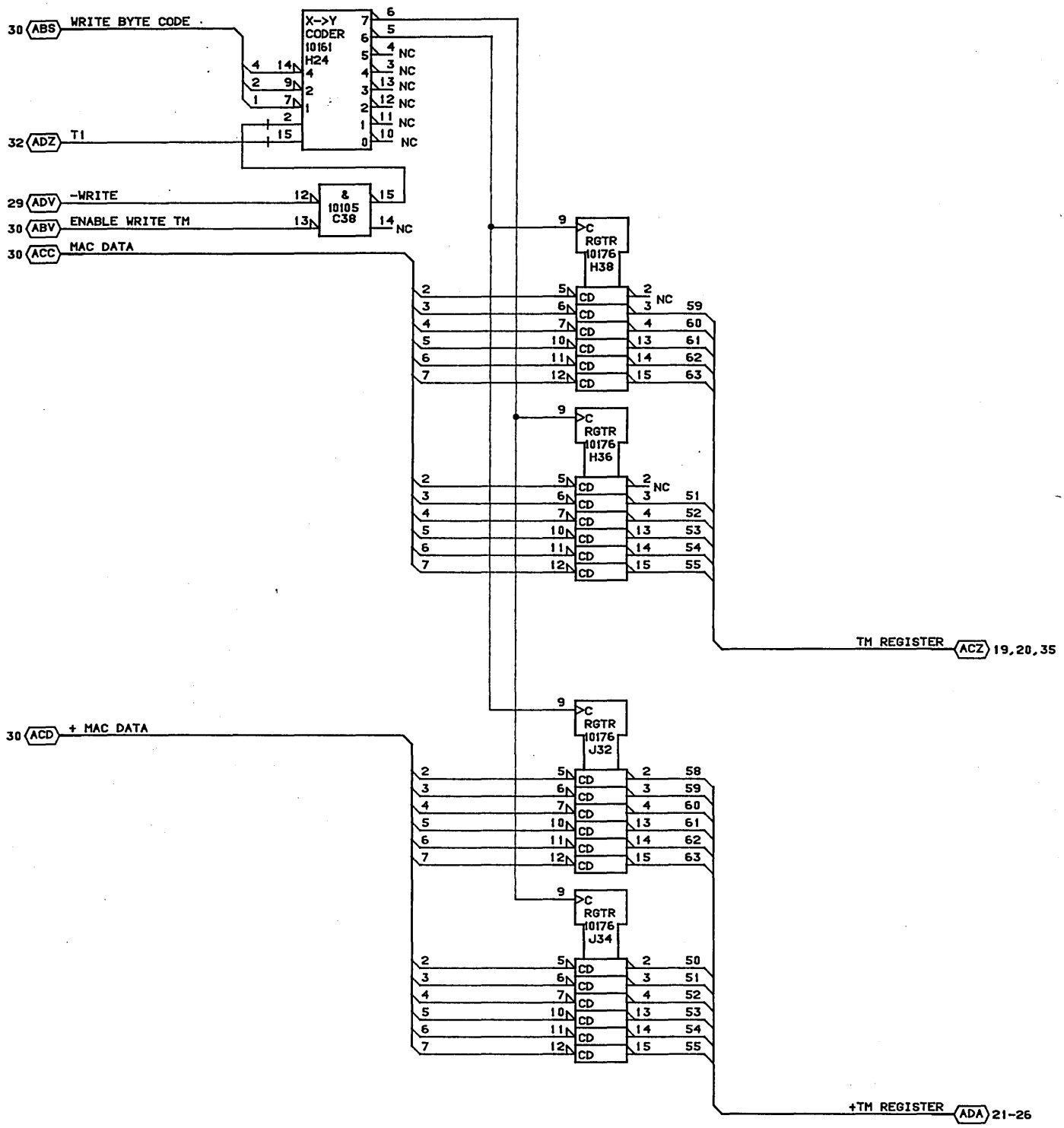

CONTROL DATA CANADA LTD	TEST MODE REGISTER MODULE ASSY:210 PAK TYPE: 1CN0	C		A
		02-MAY-84	SHEET 33	

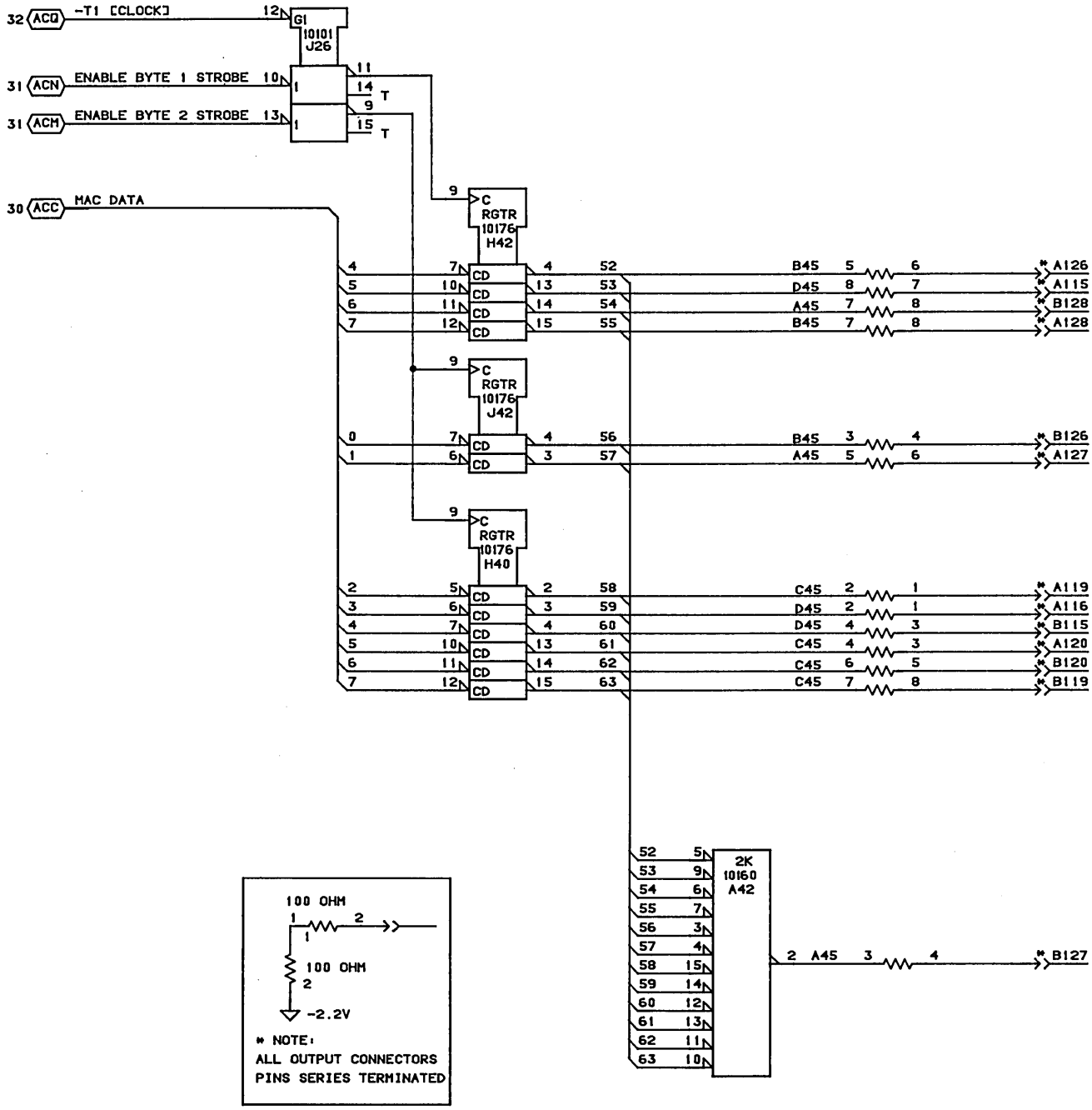

CONTROL DATA CANADA LTD	PP MEMORY ADDRESS REGISTER MODULE ASSY:210 PAK TYPE: 1CN0	C		A
		02-MAY-84	SHEET 34	

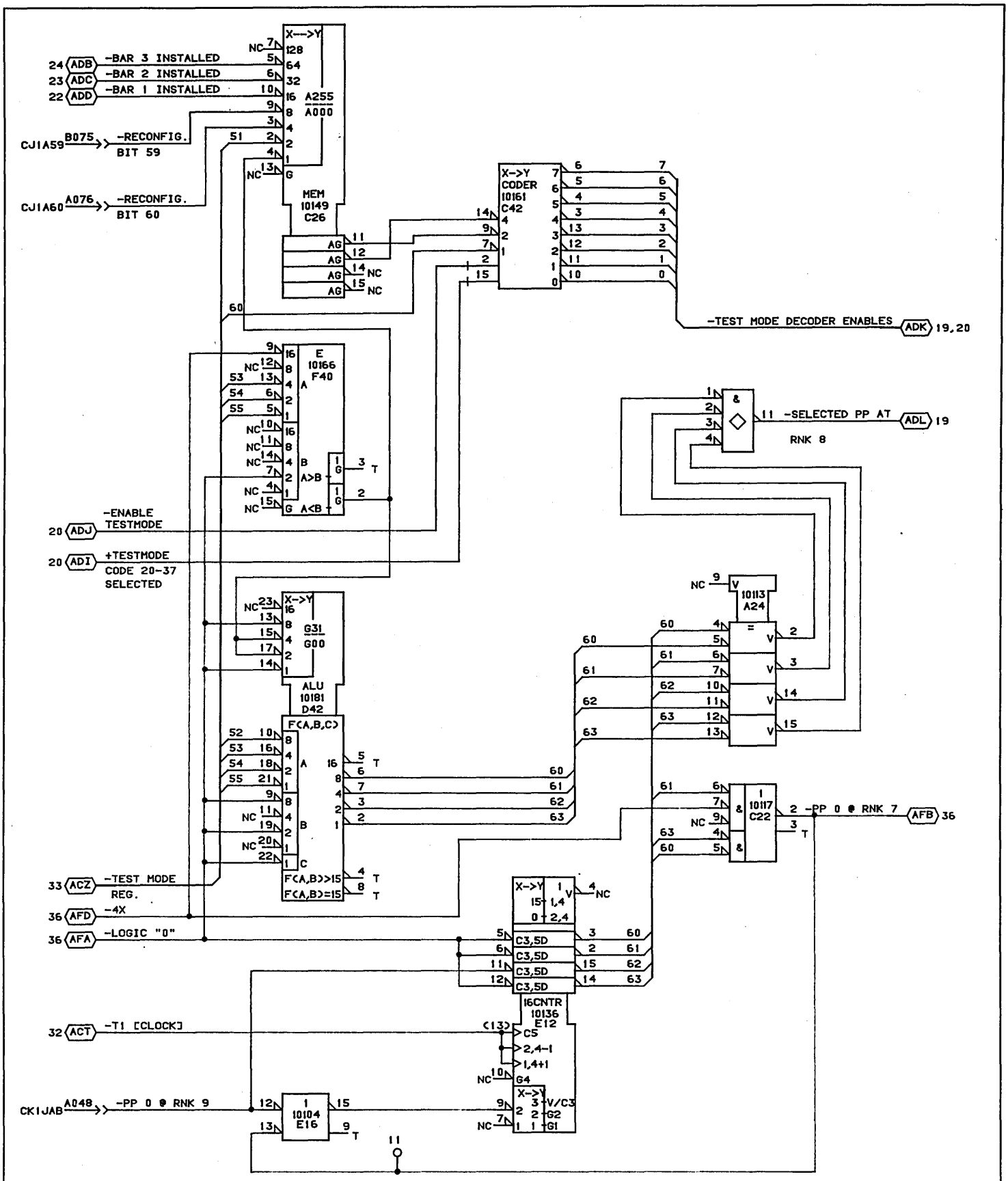

CONTROL DATA CANADA LTD	SELECTED PP TO TIMED PULSE MODULE ASSY:210 PAK TYPE: 1CN0	C		A
		02-MAY-84	SHEET 35(Z)	LOC. D07

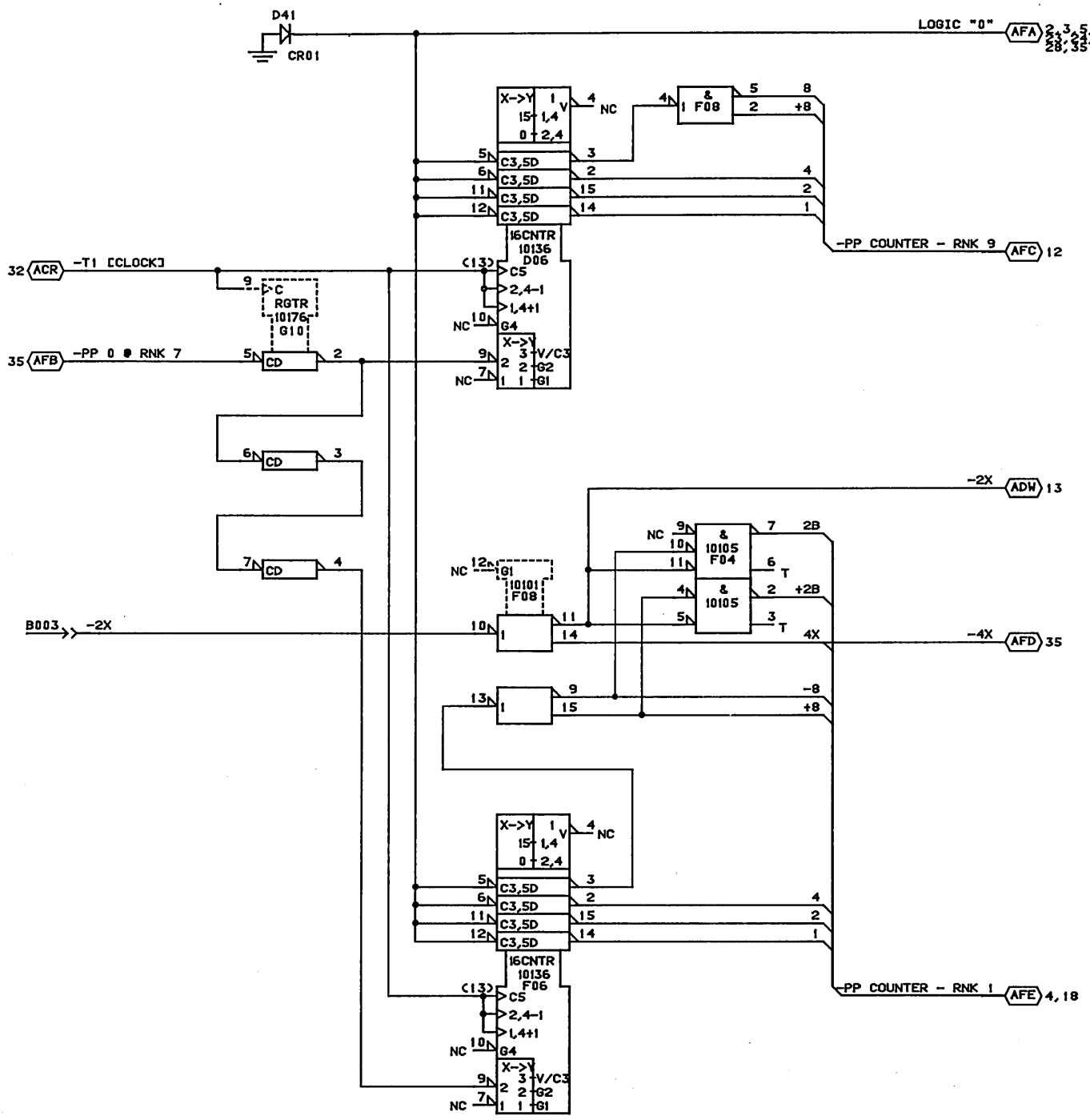

CONTROL DATA CANADA LTD	PP COUNTERS MODULE ASSY:210 PAK TYPE: 1CN0	C		A
		02-MAY-84	SHEET 36(X)	LOC. D07

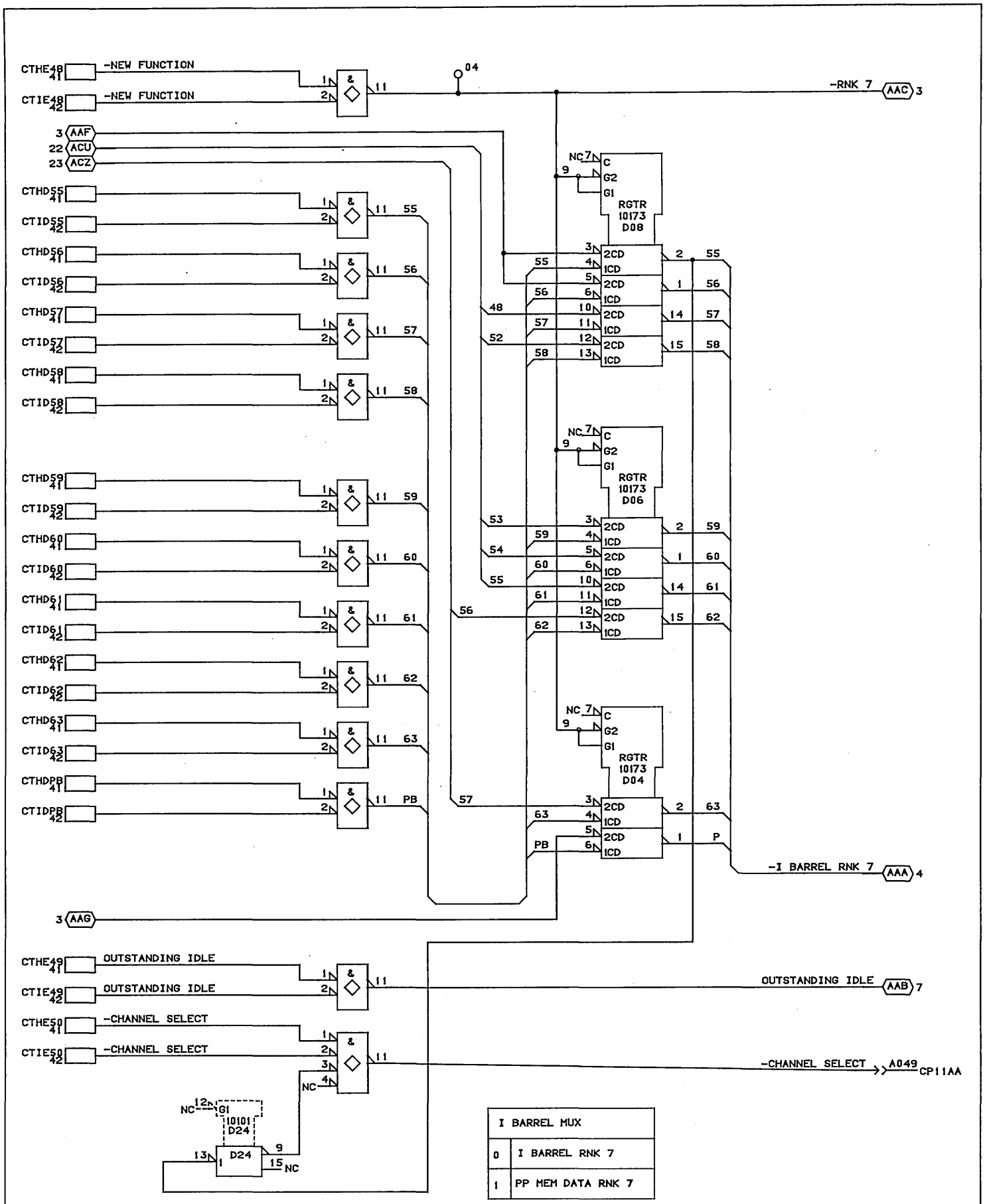

I BARREL MUX	
0	I BARREL RNK 7
1	PP MEM DATA RNK 7

CONTROL DATA CANADA LTD	NEW FUNCTION SELECT MODULE ASSY: 210 PAK TYPE: 1CP0		C	A
		10-JAN-85	SHEET 02	

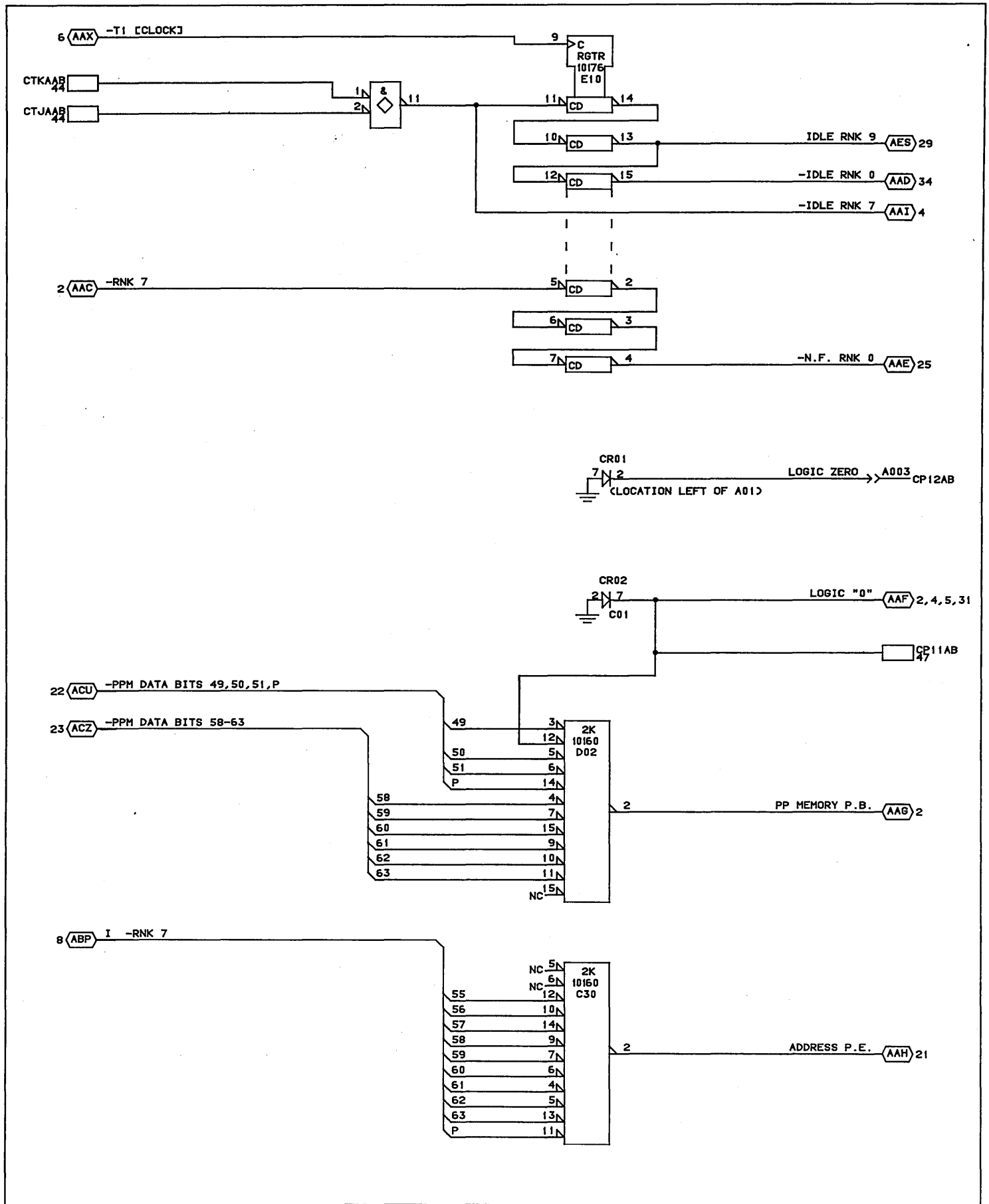

CONTROL DATA CANADA LTD	I RNK 7 PARITY MODULE ASSY:210 PAK TYPE: 1CP0	C		A
		15-JAN-85	SHEET 03	LOC. D11

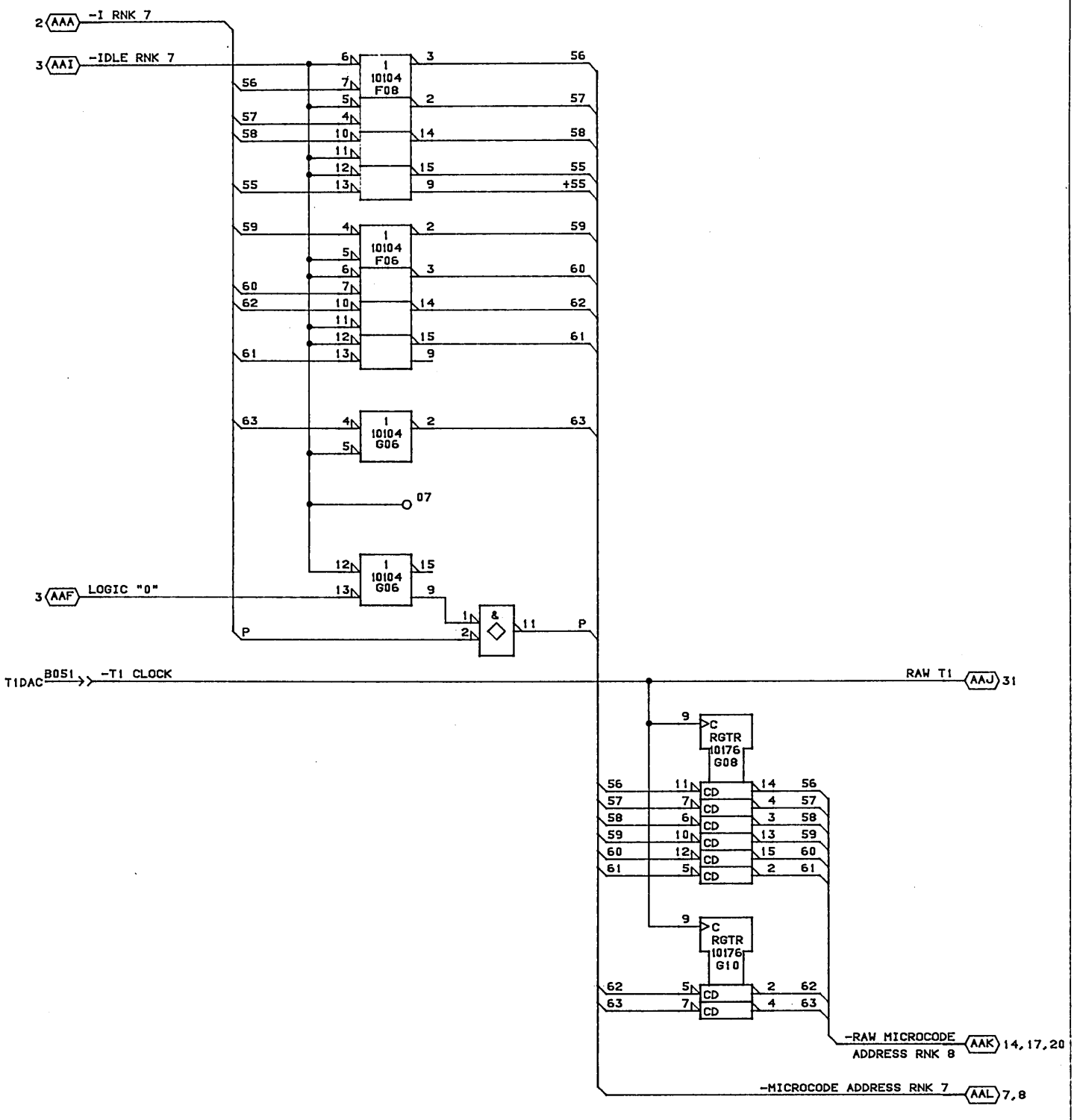

CONTROL DATA CANADA LTD	MICROCODE ADDRESS MODULE ASSY: 210 PAK TYPE: 1CP0		C		A
		10-JAN-85	SHEET 04	LOC. D11	

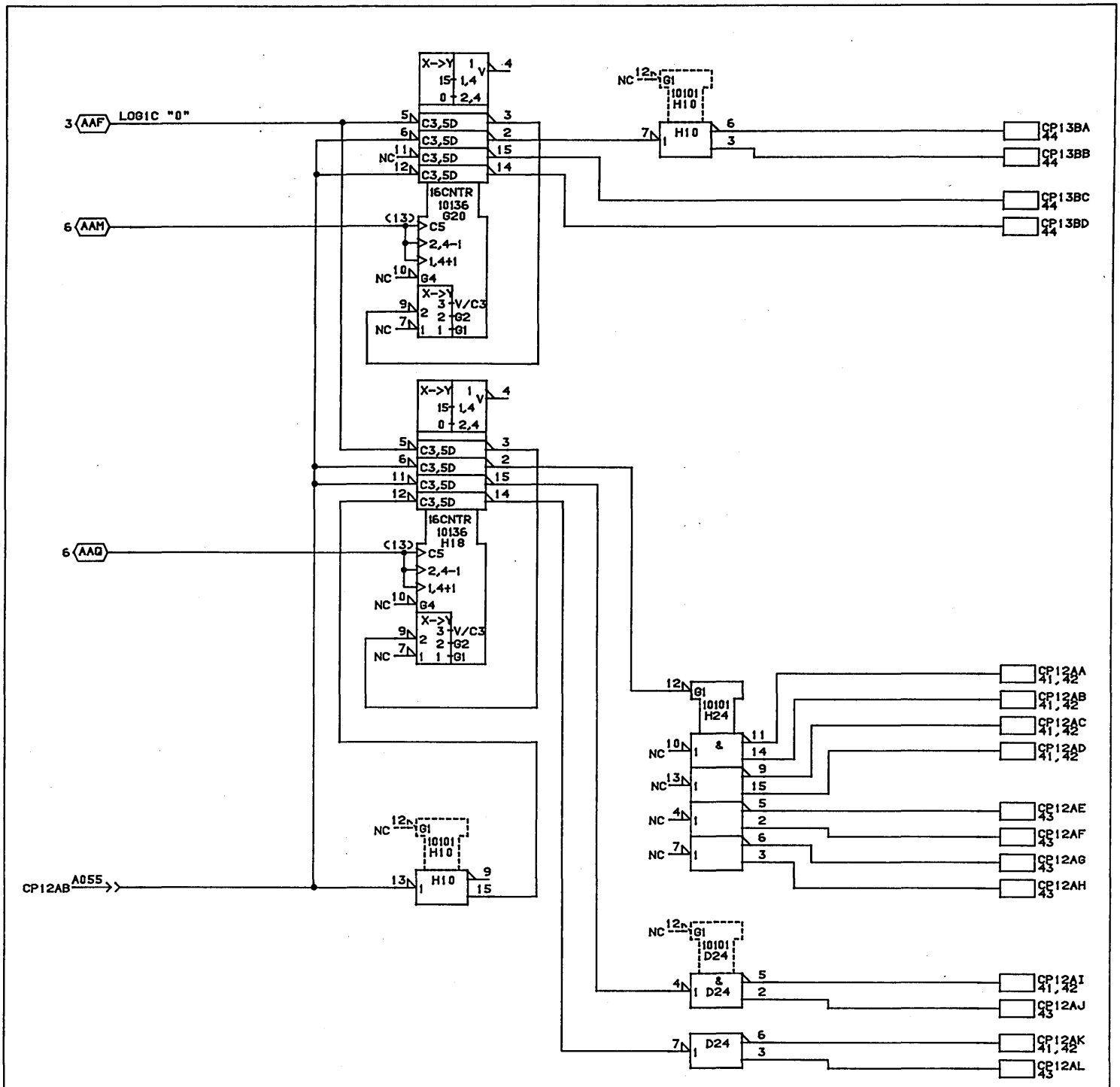

CONTROL DATA CANADA LTD	BARREL CHIP ADDRESS GENERATOR MODULE ASSY:210 PAK TYPE: 1CP0	C		A
		10-JAN-85	SHEET 05	LOC. D11

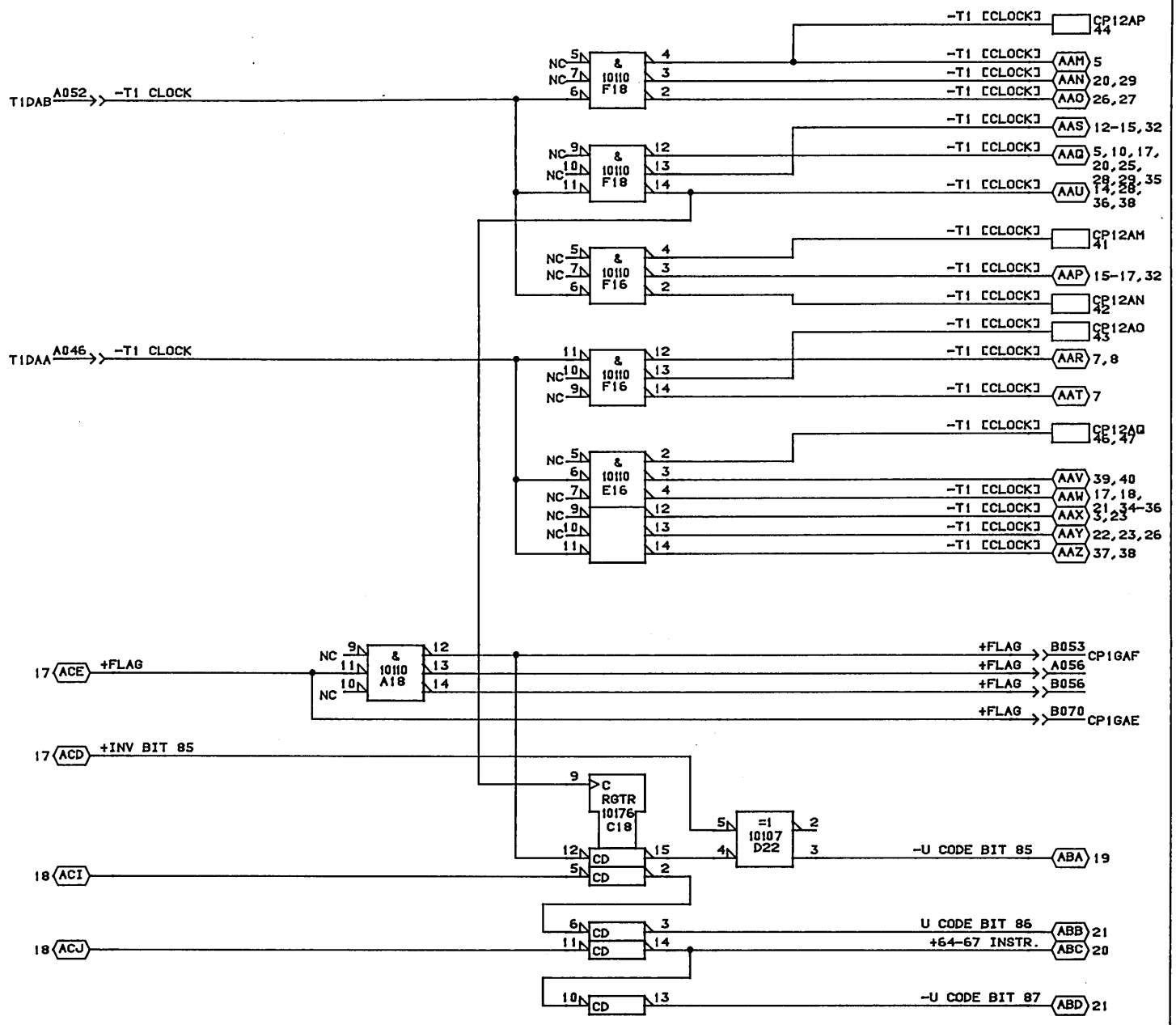

CONTROL DATA CANADA LTD	T1 CLOCK FANOUTS MODULE ASSY:210 PAK TYPE: 1CP0		C		A
		10-JAN-85	SHEET 06	LOC. D11	

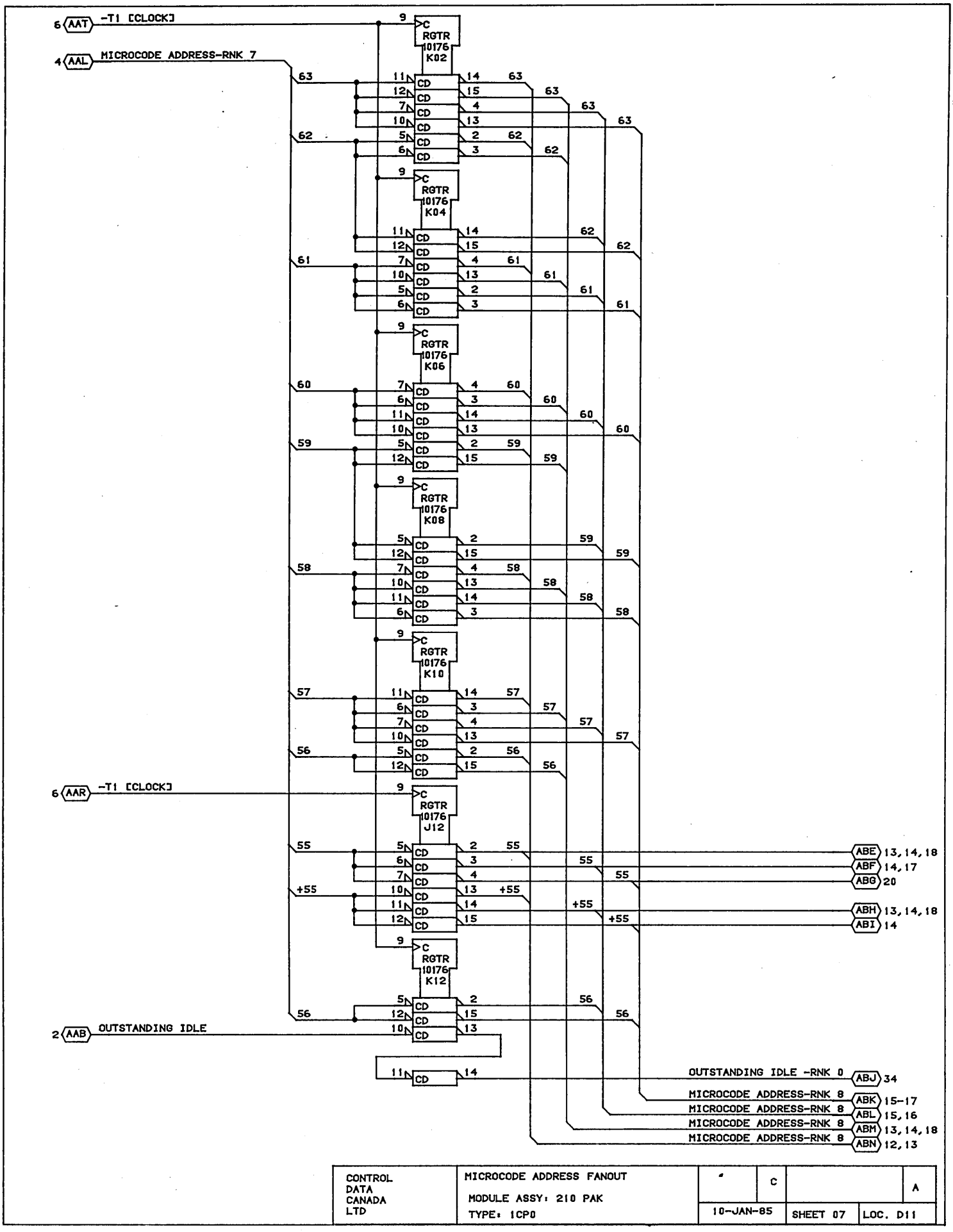

CONTROL DATA CANADA LTD	MICROCODE ADDRESS FANOUT MODULE ASSY: 210 PAK TYPE: 1CP0	C		A
		10-JAN-85	SHEET 07	LOC. D11

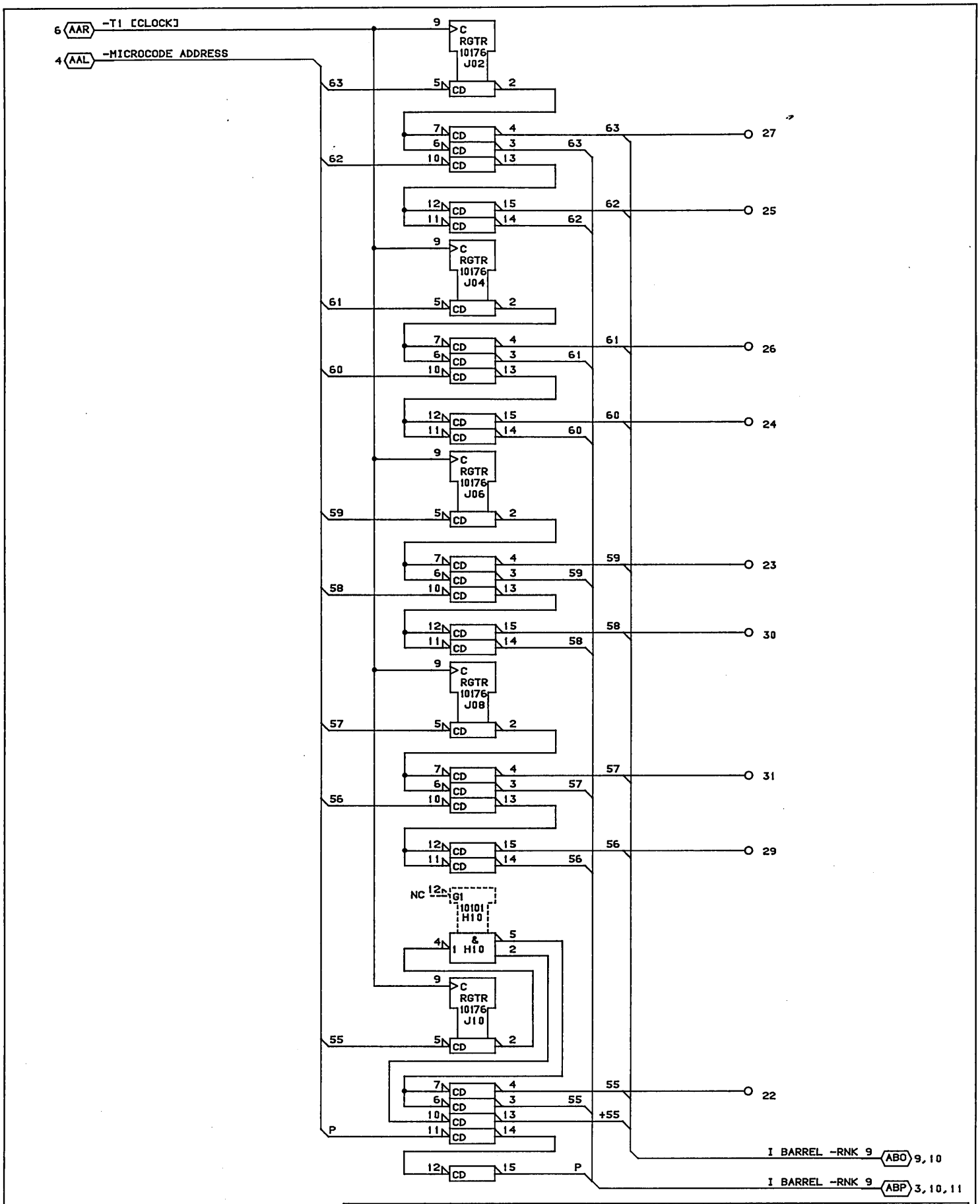

CONTROL DATA CANADA LTD	I BARREL-RNK 8,9 MODULE ASSY:210 PAK TYPE: 1CP0	C		A
		10-JAN-85	SHEET 08	LOC. D11

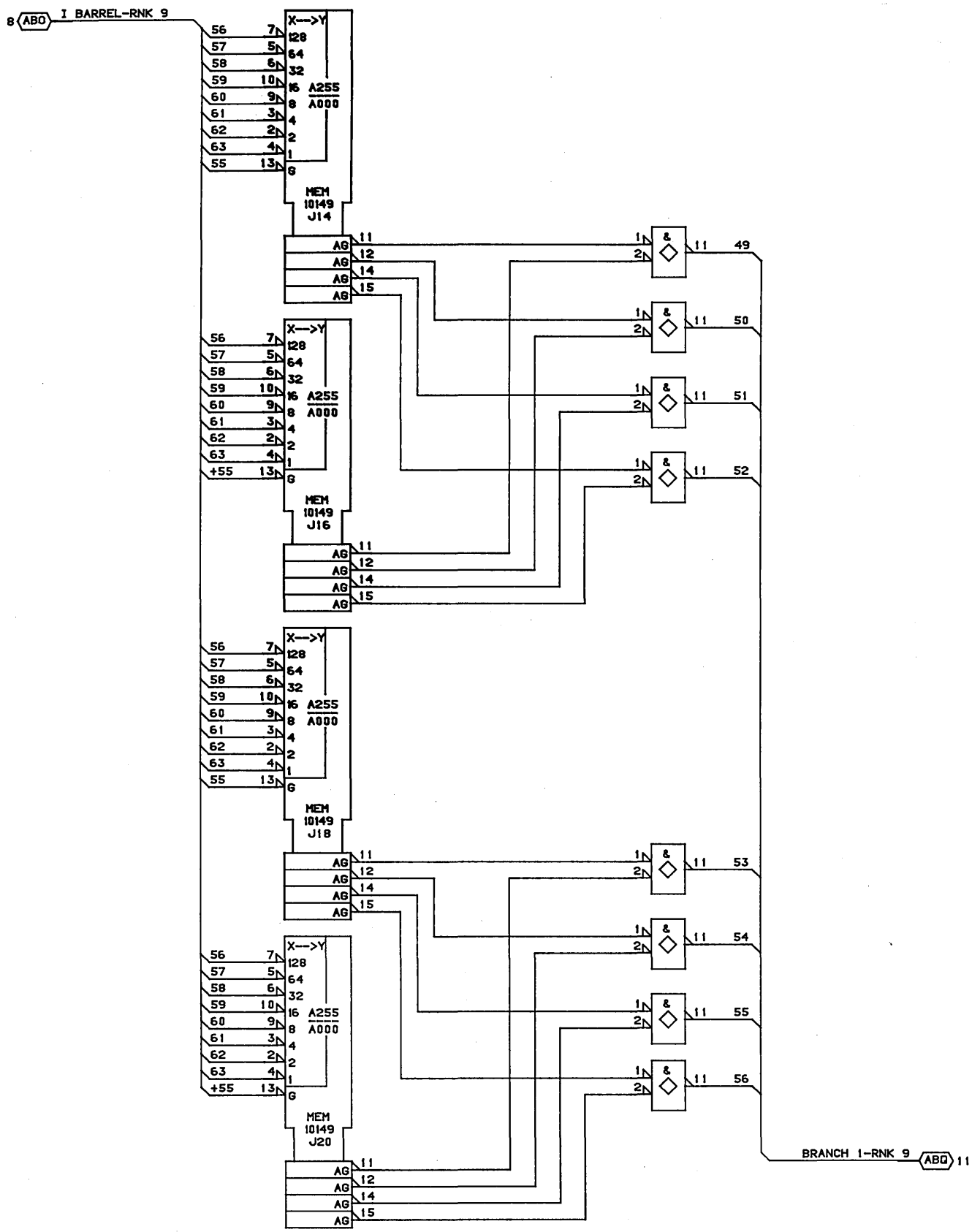

CONTROL DATA CANADA LTD	BRANCH 1 ROMS MICROCODE BITS 49-56 MODULE ASSY:210 PAK TYPE: 1CP0	C		A
		10-JAN-85	SHEET 09	LOC. D11

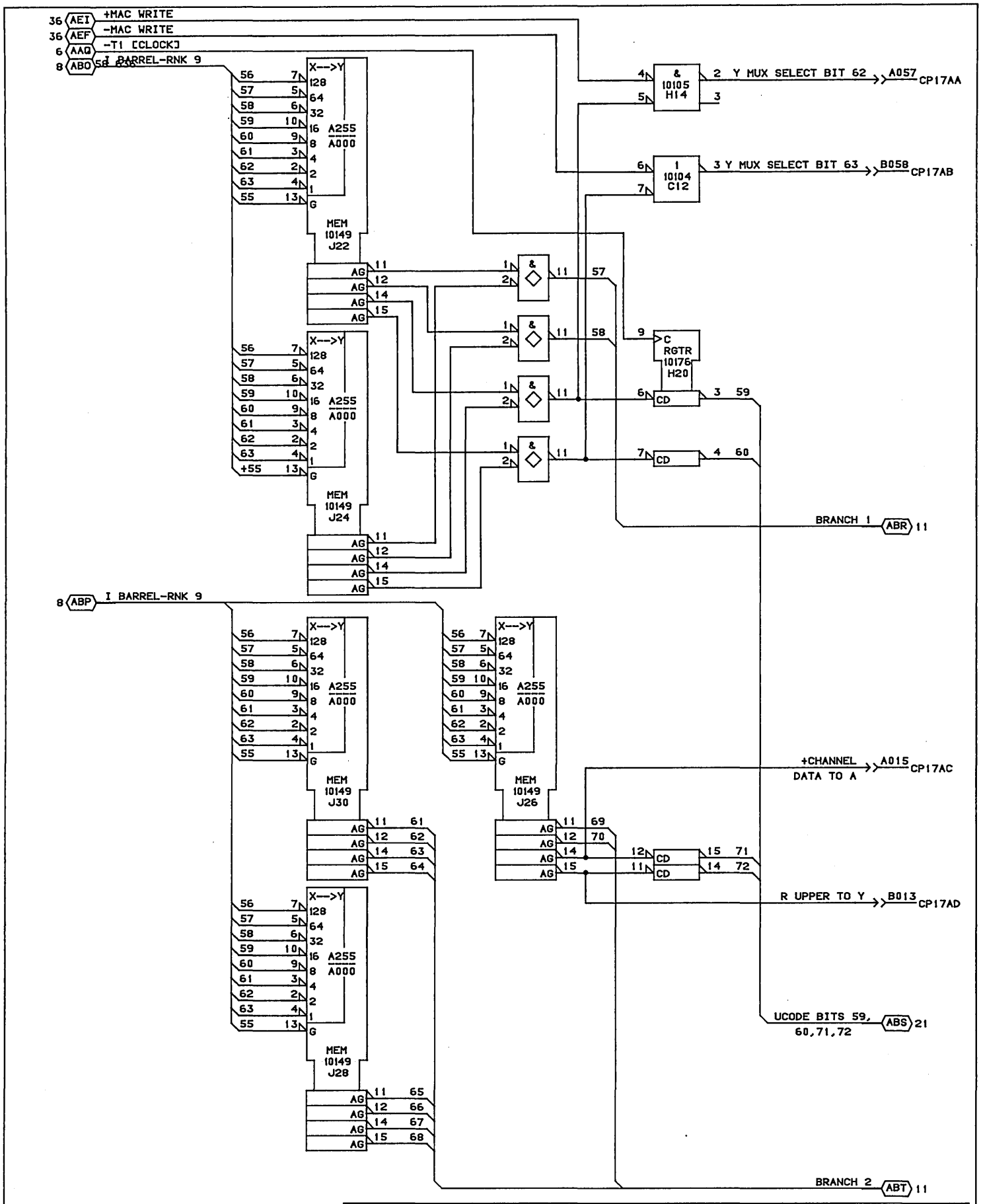

CONTROL DATA CANADA LTD	BRANCH 2 ROMS MICROCODE BITS 59-72 MODULE ASSY:210 PAK TYPE: 1CP0	C		A
		10-JAN-85	SHEET 10	LOC. D11

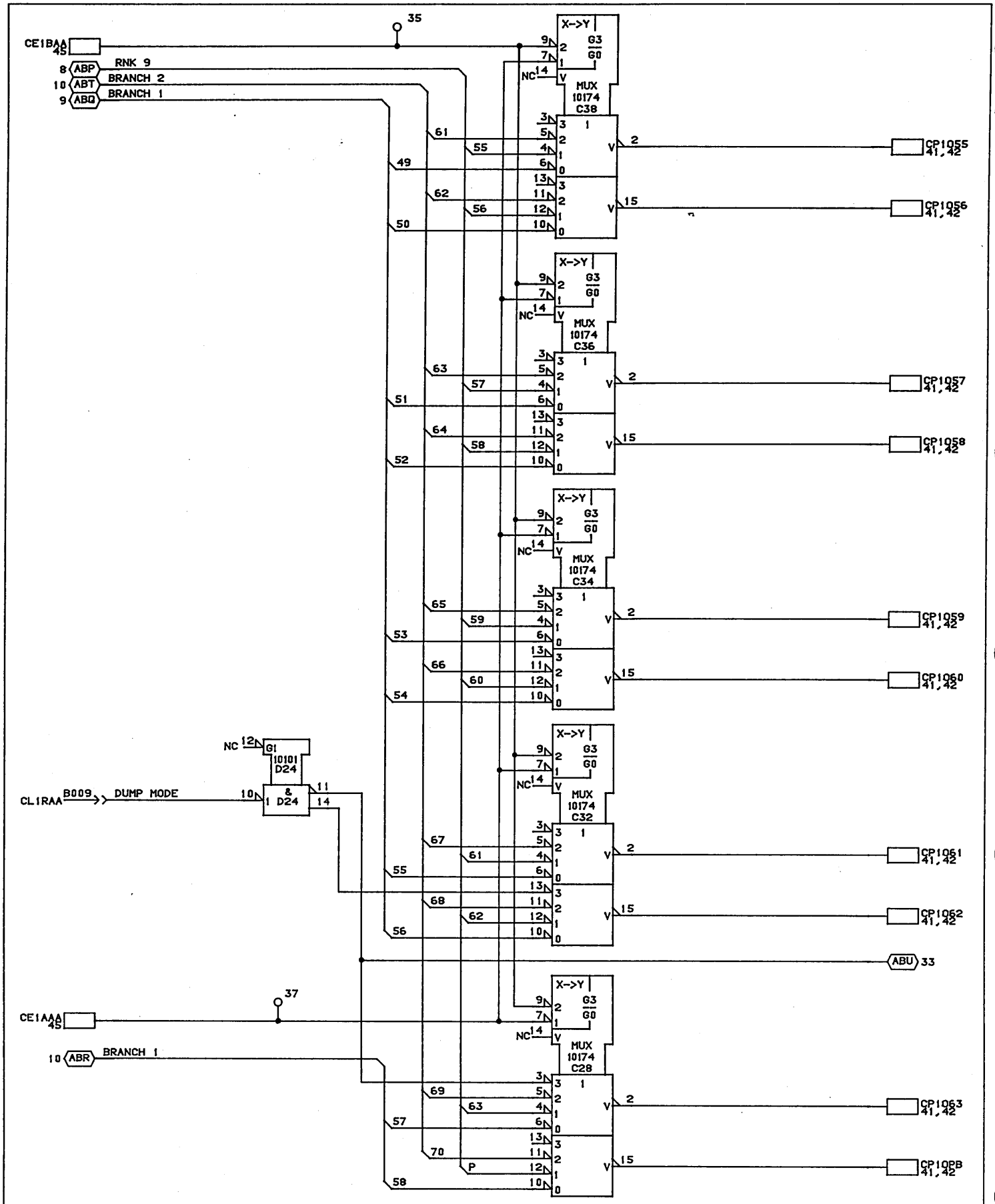

CONTROL DATA CANADA LTD	BRANCH SELECT MUX MODULE ASSY:210 PAK TYPE: 1CP0	C		A
		10-JAN-85	SHEET 11	LOC. D11

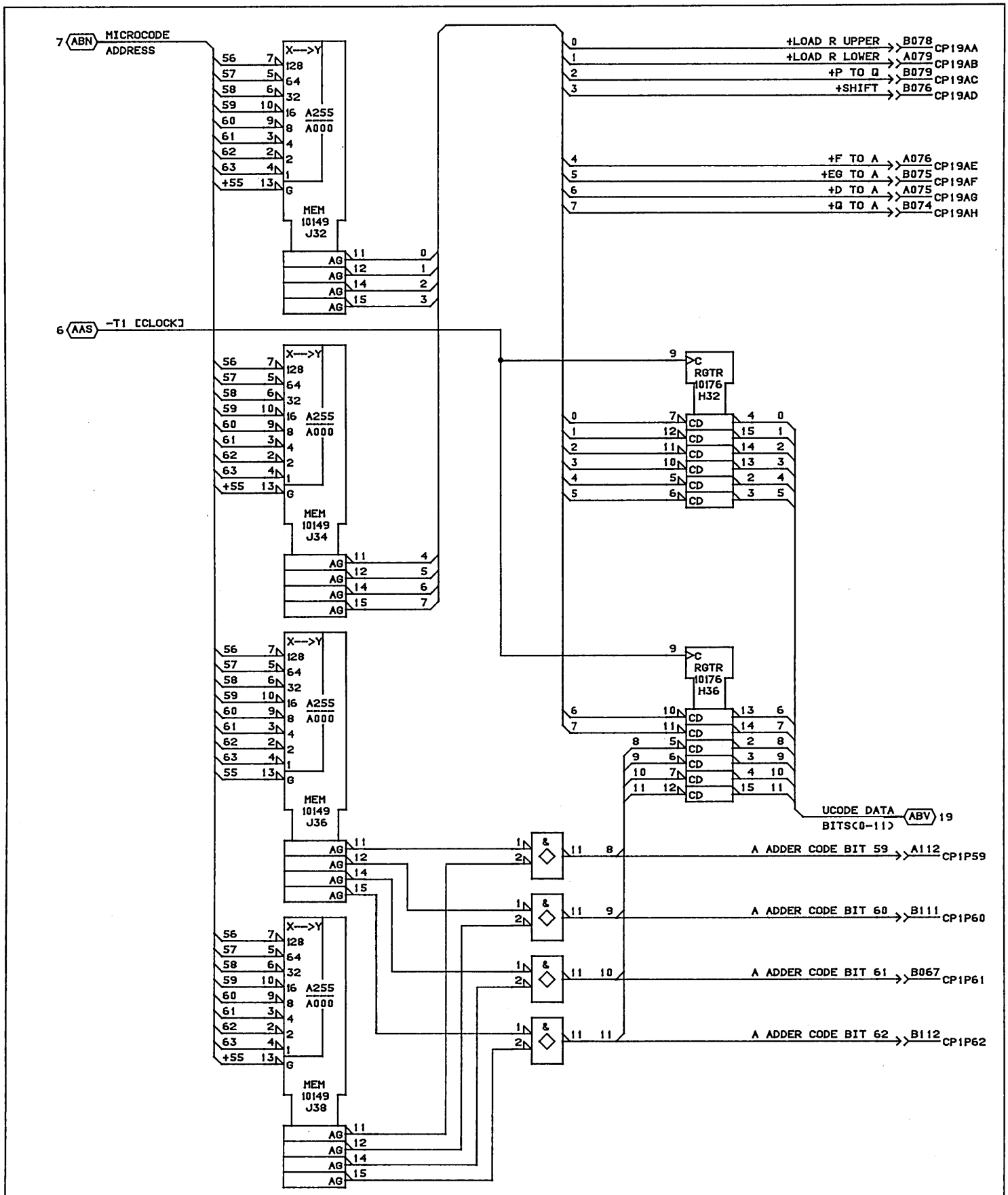

CONTROL DATA CANADA LTD	MICROCODE BITS 0-11 MODULE ASSY:210 PAK TYPE: 1CP0	C		A
		10-JAN-85	SHEET 12	LOC. D11

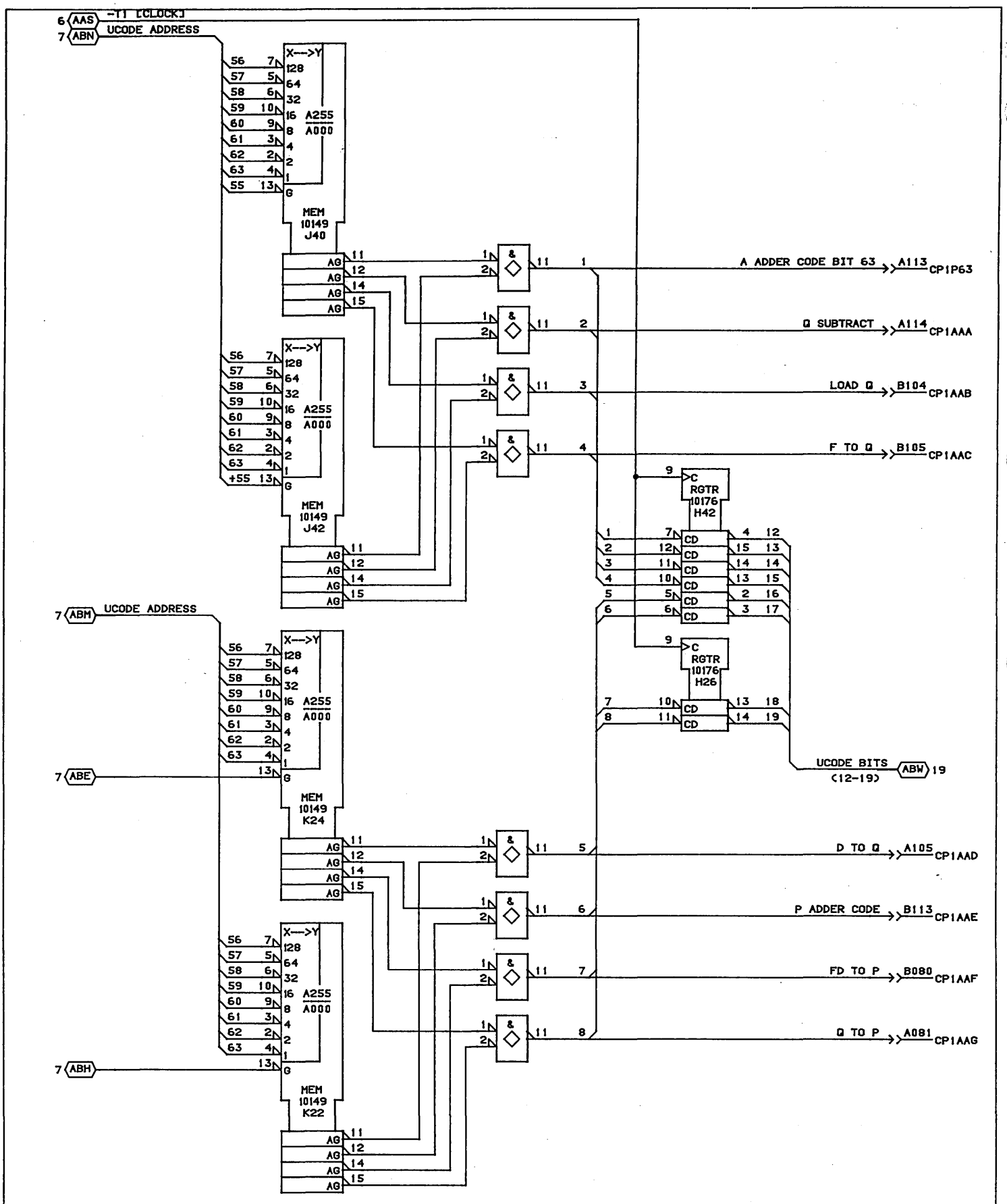

CONTROL DATA CANADA LTD	MICROCODE BITS 12-19 MODULE ASSY:210 PAK TYPE: 1CP0	C		A
		10-JAN-85	SHEET 13	LOC. D11

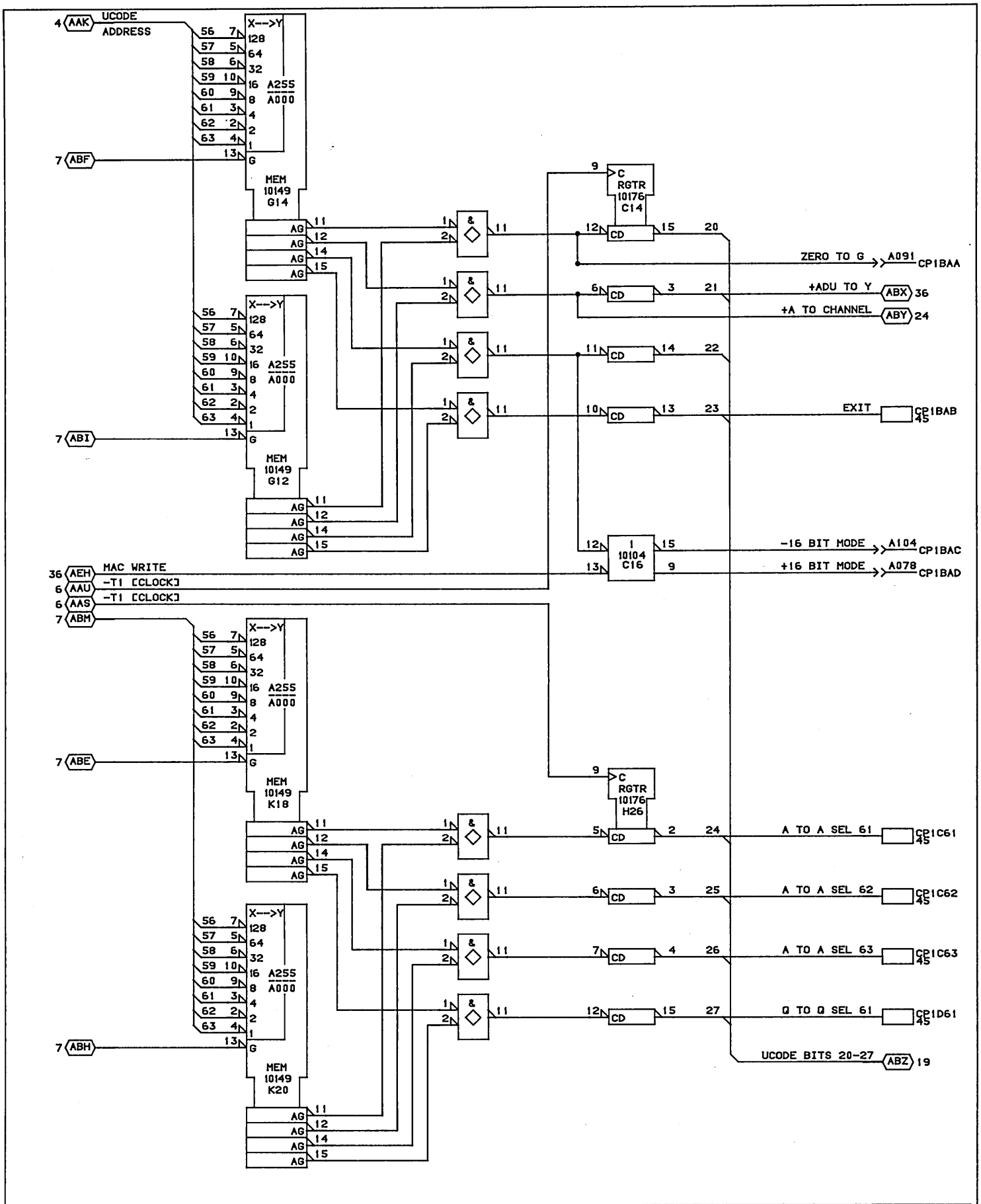

CONTROL DATA CANADA LTD	MICROCODE BITS 20-27 MODULE ASSY:210 PAK TYPE: 1CP0	C		A
		10-JAN-85	SHEET 14	LOC. D11

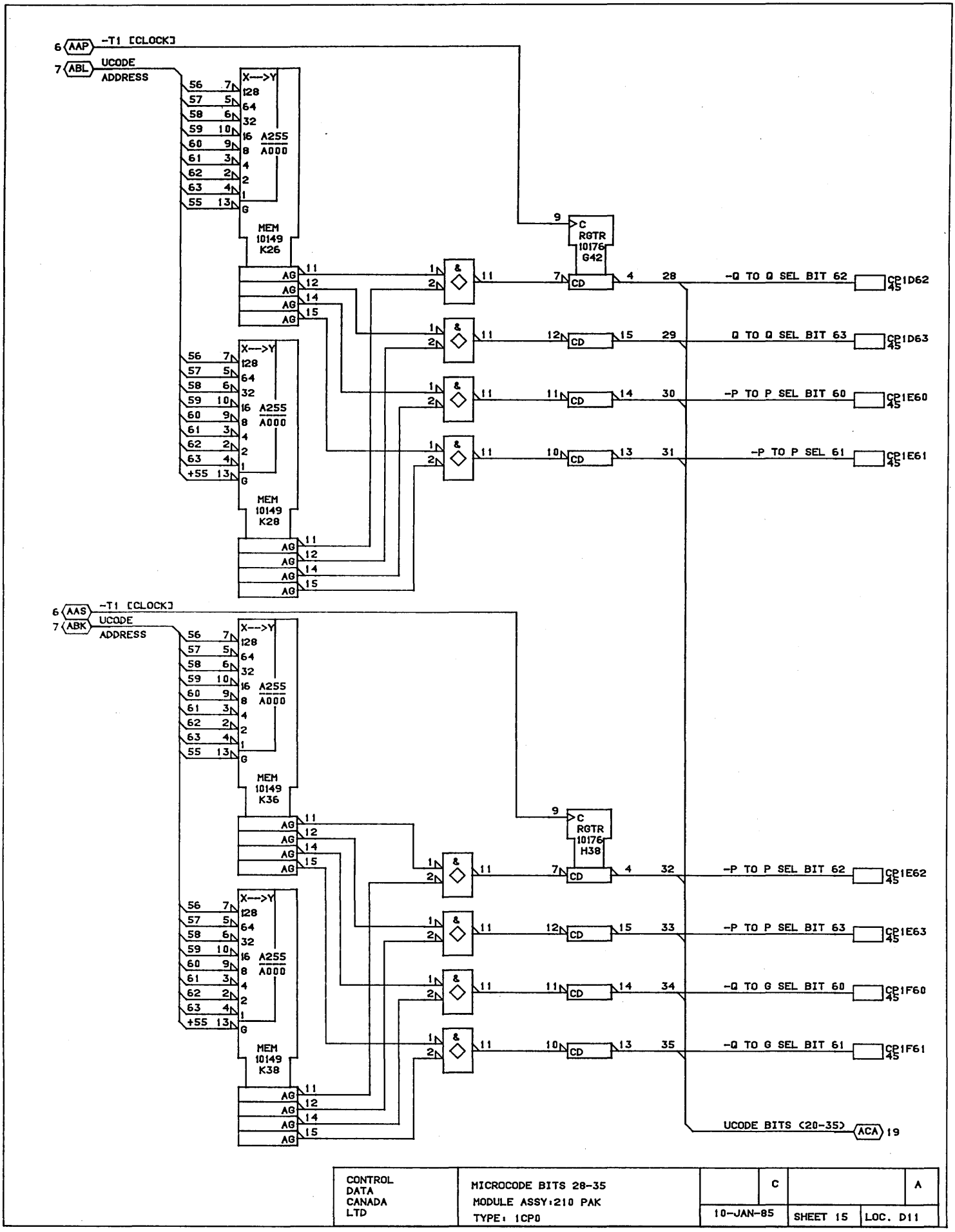

CONTROL DATA CANADA LTD	MICROCODE BITS 28-35 MODULE ASSY:210 PAK TYPE: 1CP0	C		A
		10-JAN-85	SHEET 15	LOC. D11

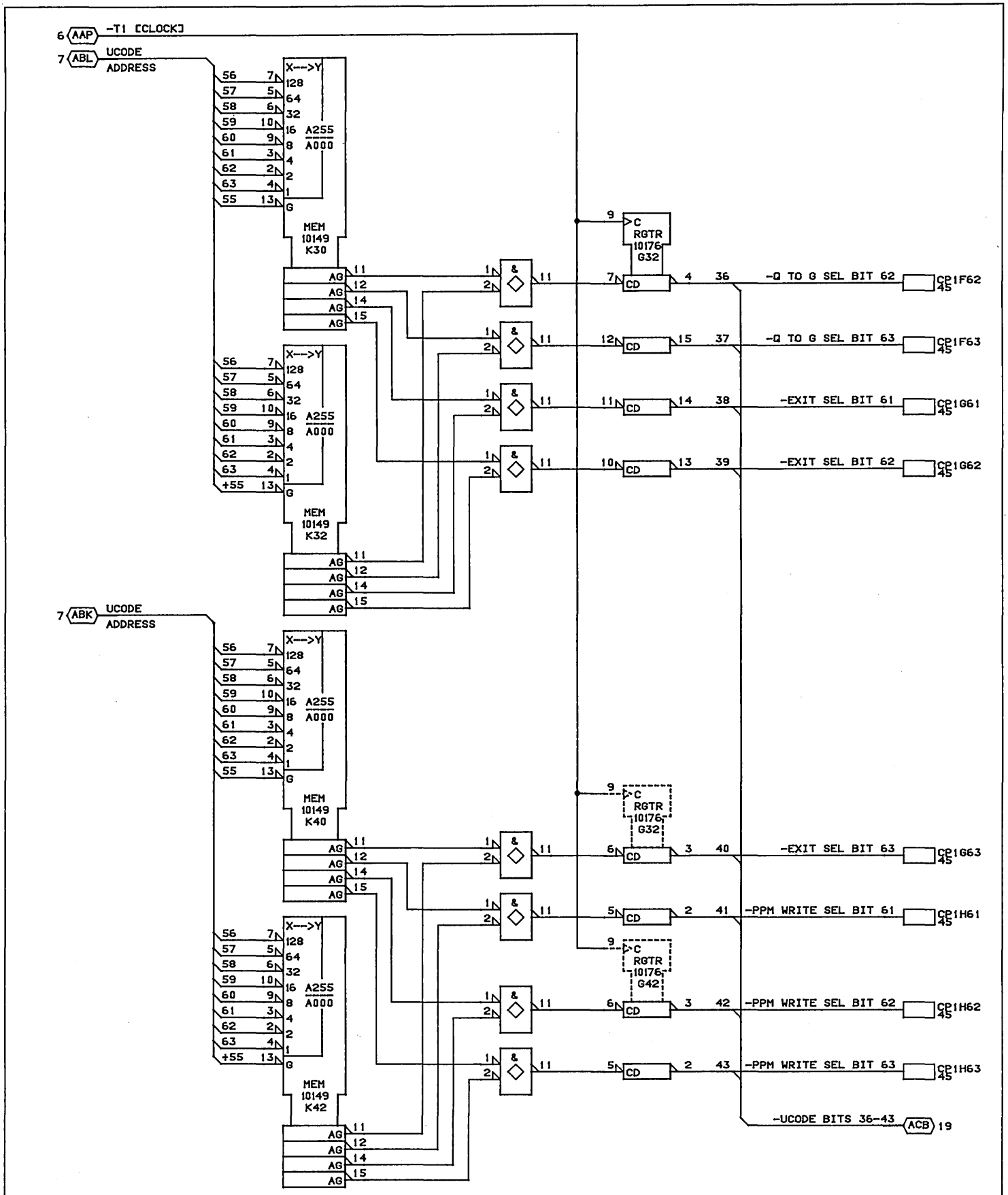

CONTROL DATA CANADA LTD	MICROCODE BITS 36-43 MODULE ASSY:210 PAK TYPE: 1CP0	C		A
		11-JAN-85	SHEET 16	LOC. D11

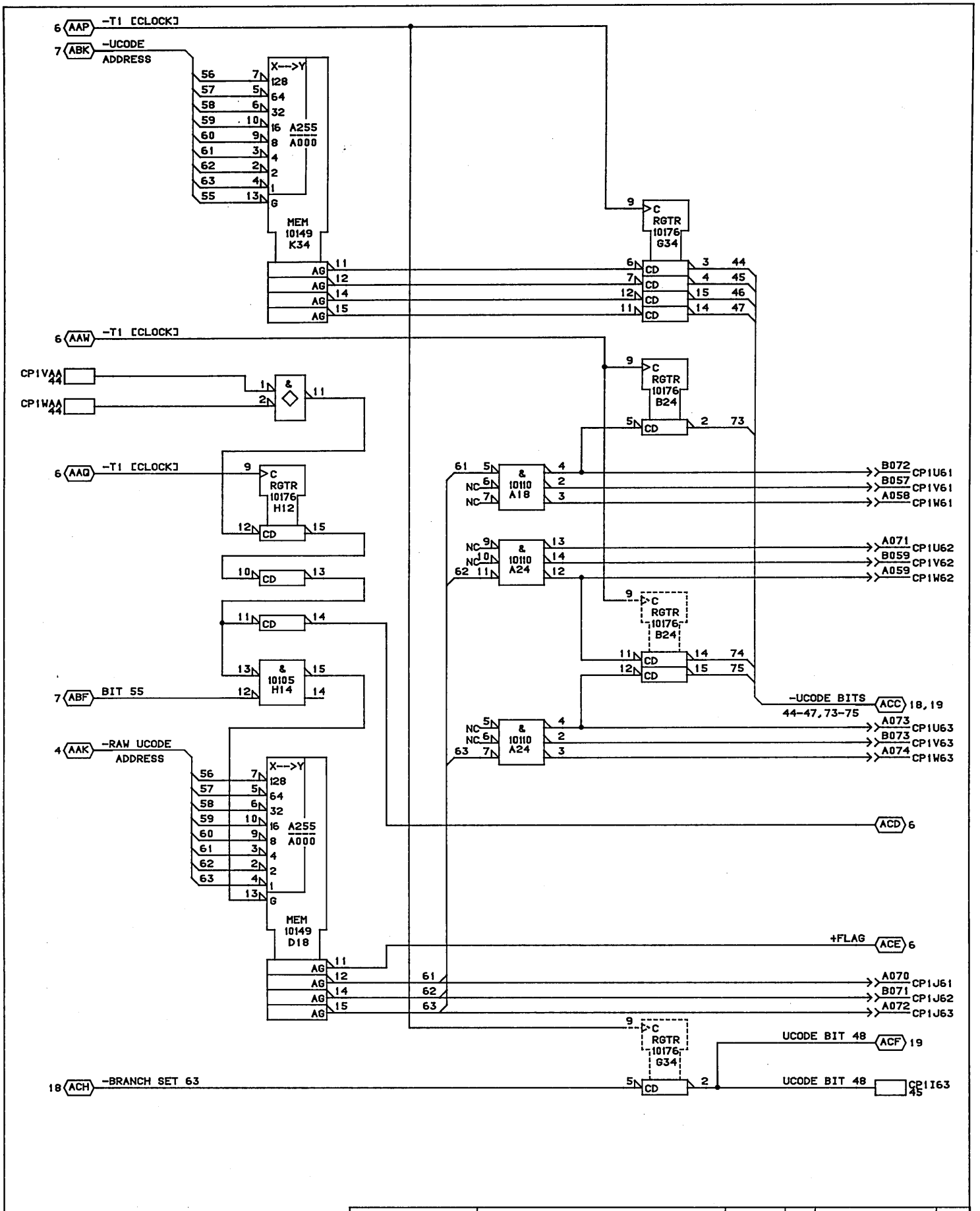

CONTROL DATA CANADA LTD	MICROCODE BITS 44-47,72-75 MODULE ASSY:210 PAK TYPE: 1CP0	C		A
		10-JAN-85	SHEET 17	LOC. D11

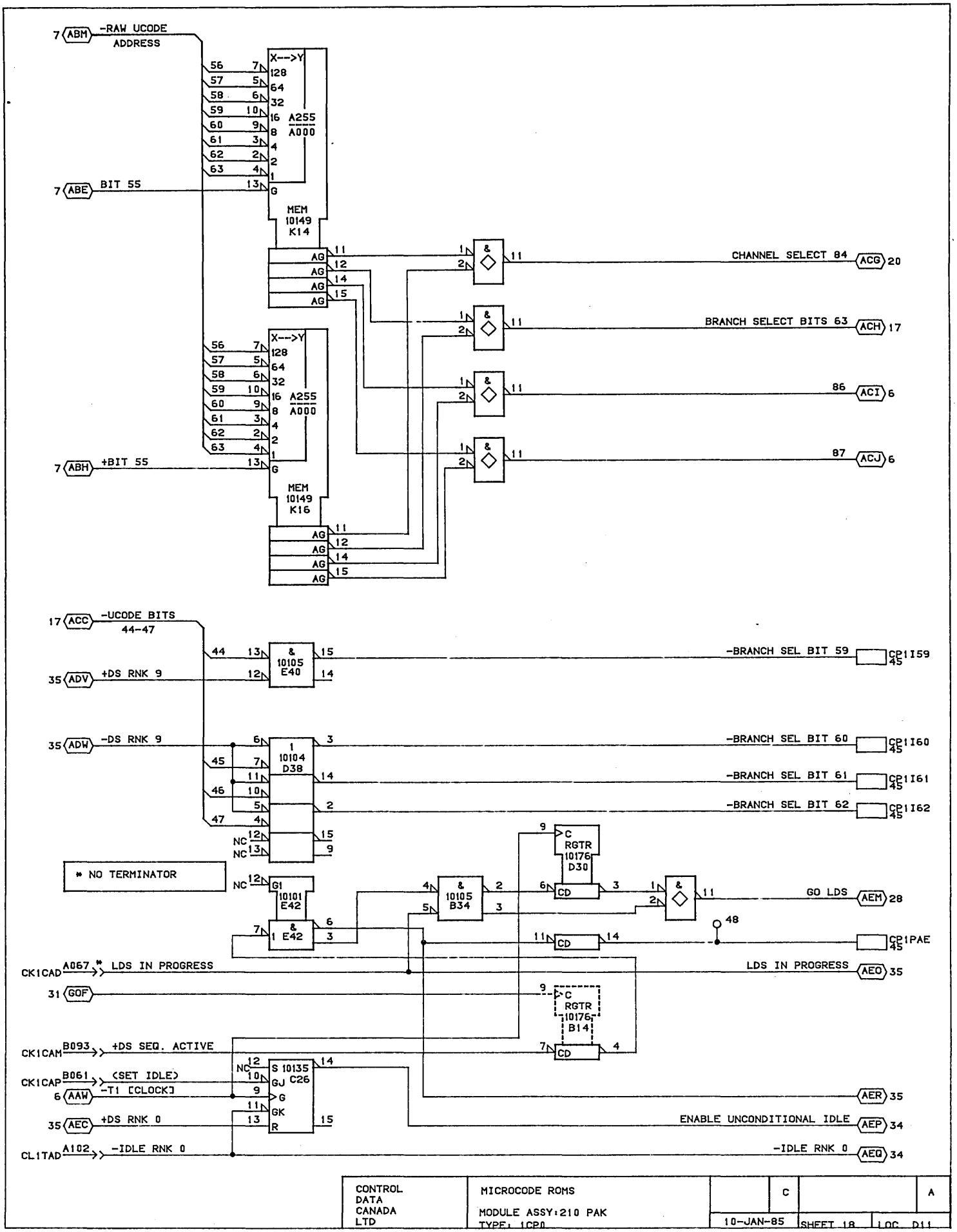

CONTROL DATA CANADA LTD	MICROCODE ROMS MODULE ASSY:210 PAK TYPE: 1CP0	C		A
		10-JAN-85	SHEET 18	LOC D11

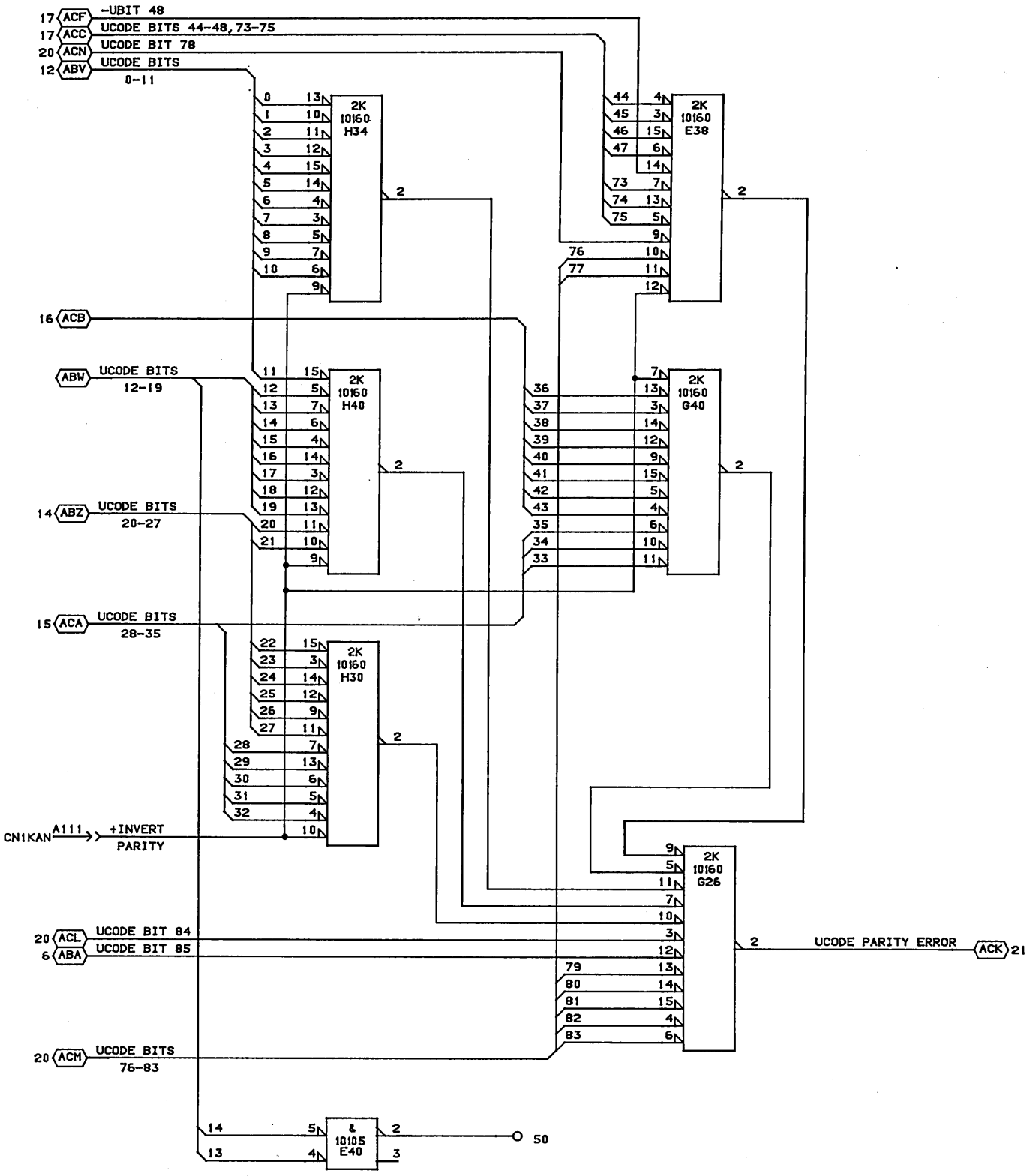

CONTROL DATA CANADA LTD	MICROCODE PARITY CHECKER MODULE ASSY:210 PAK TYPE: 1CP0	C		A
		11-JAN-85	SHEET 19	LOC. D11

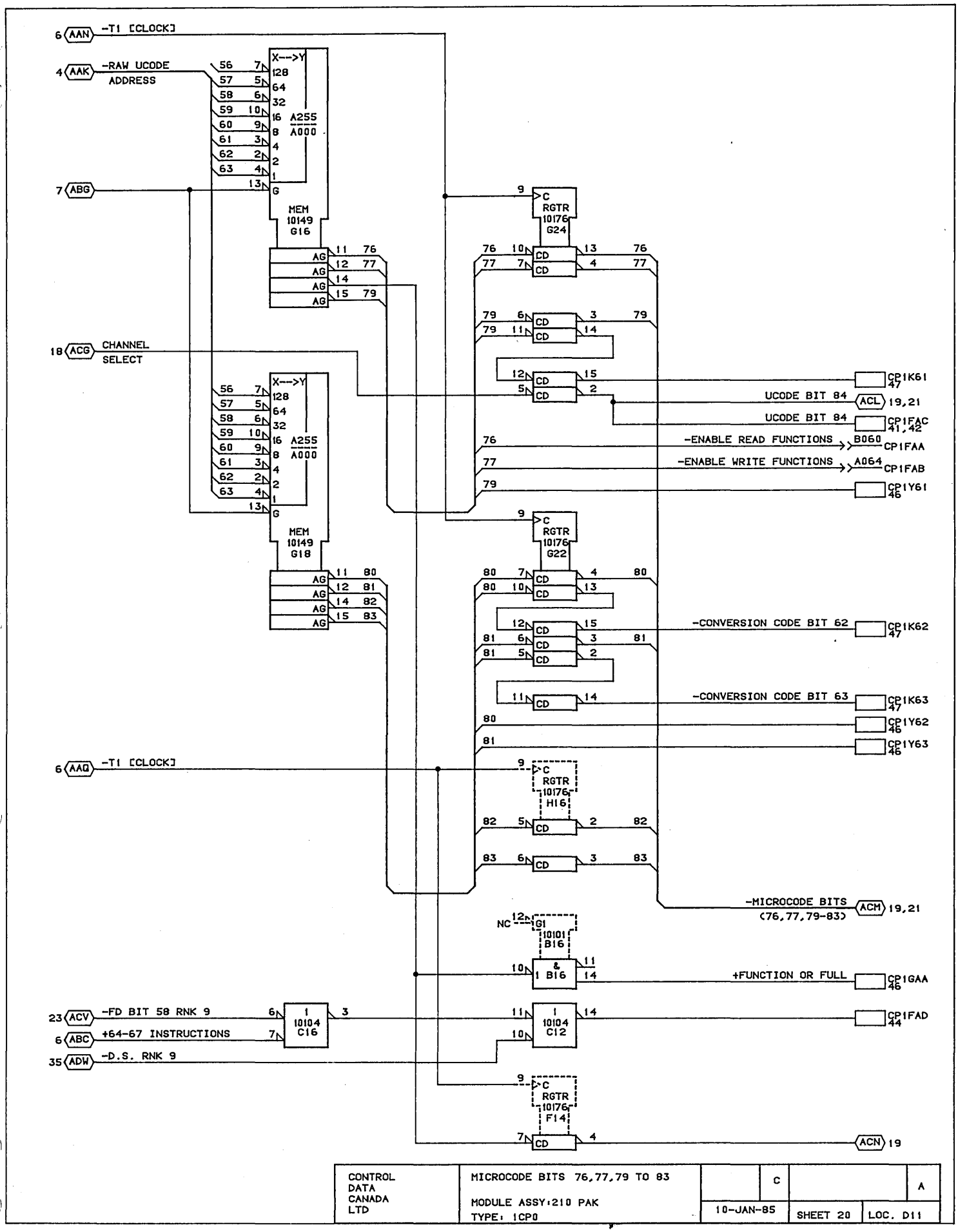

CONTROL DATA CANADA LTD	MICROCODE BITS 76,77,79 TO 83 MODULE ASSY:210 PAK TYPE: 1CP0		C		A
		10-JAN-85	SHEET 20	LOC. D11	

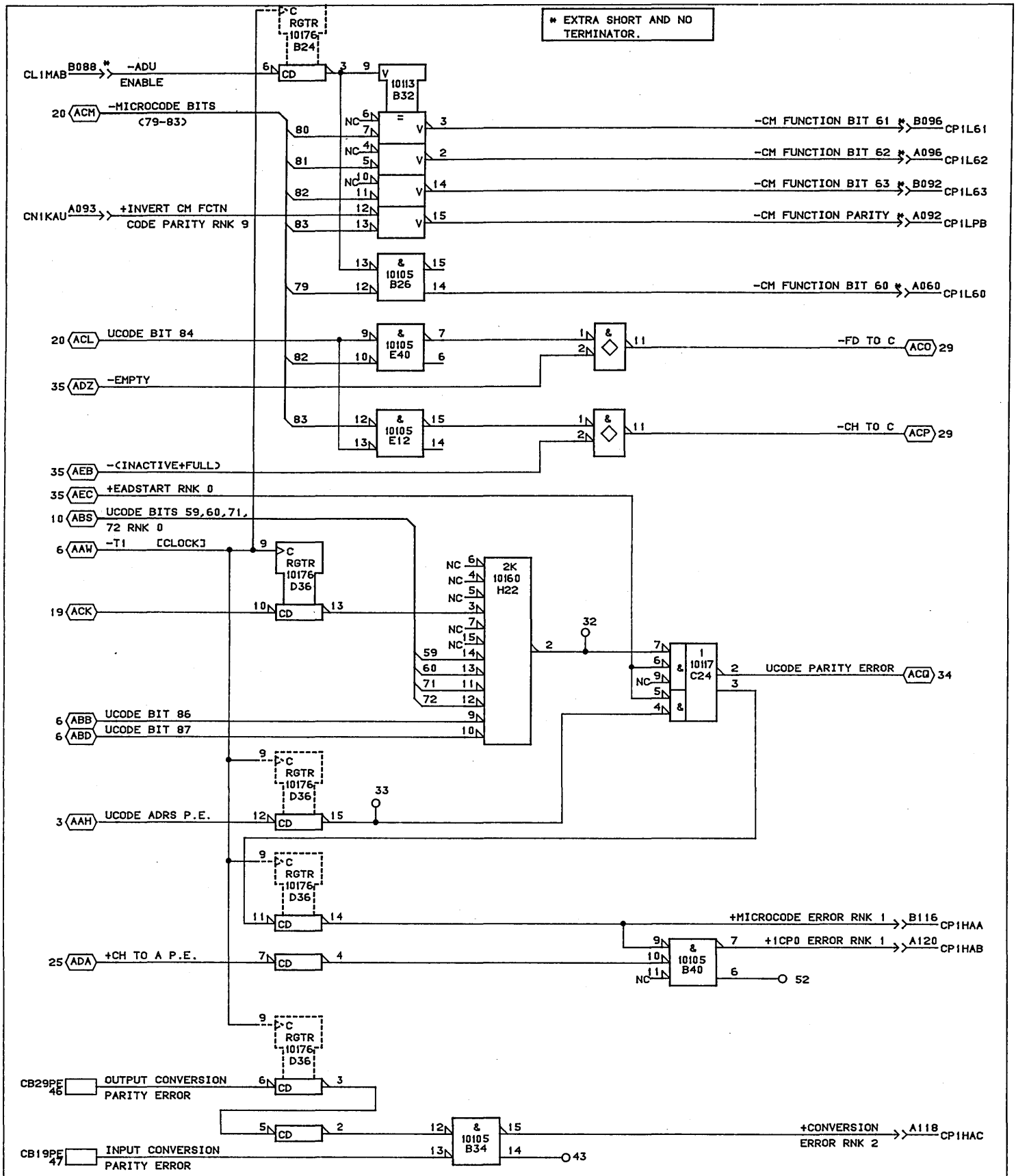

CONTROL DATA CANADA LTD	MICROCODE P.E. RNK 1 CM FUNCTION BITS MODULE ASSY:210 PAK TYPE: 1CP0	C		A
		10-JAN-85	SHEET 21	LOC. D11

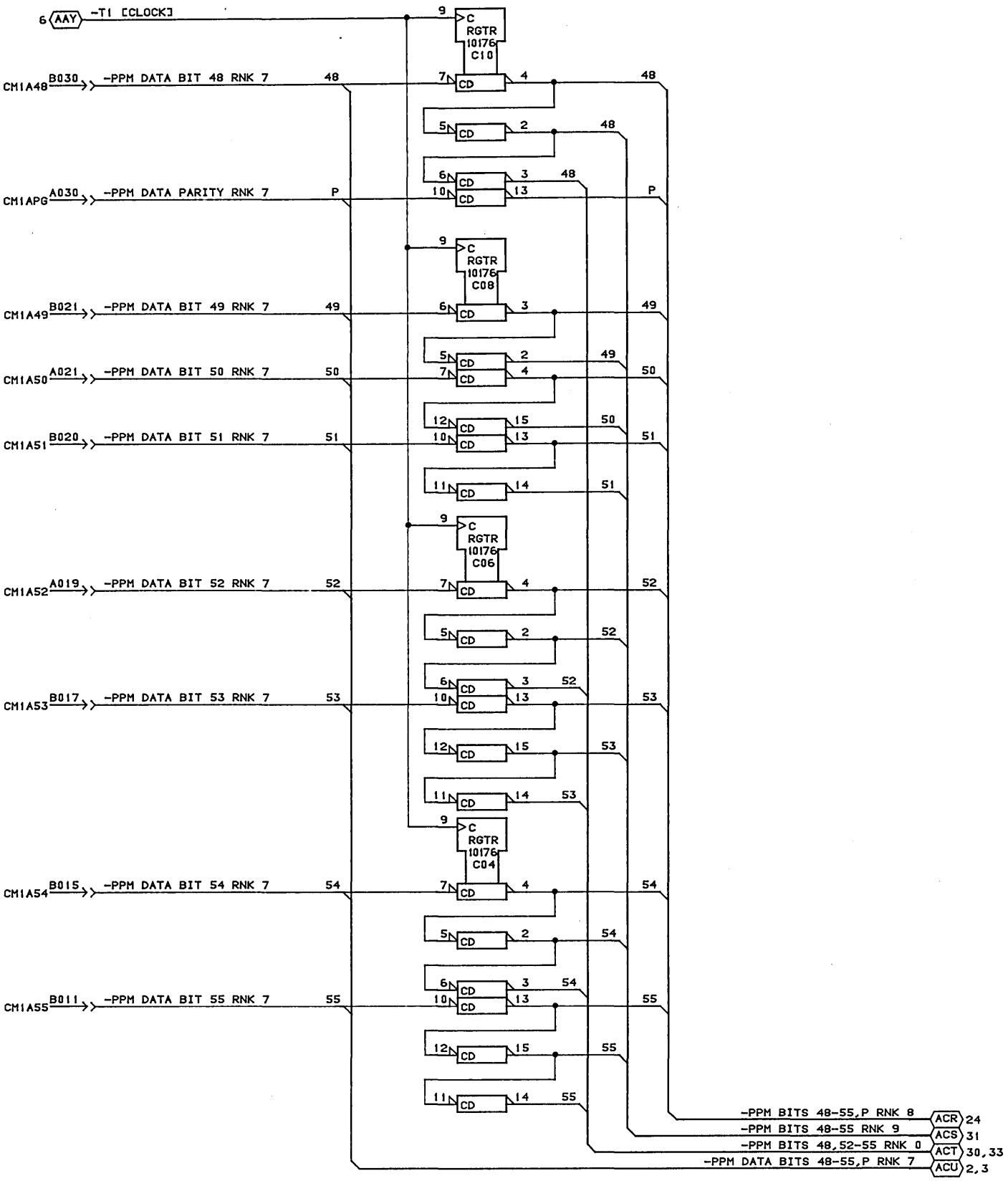

CONTROL DATA CANADA LTD	PPM DATA BITS 48-55,P RNKS 0,7,8,9 MODULE ASSY:210 PAK TYPE: 1CP0	C		A
		10-JAN-85	SHEET 22	LOC. D11

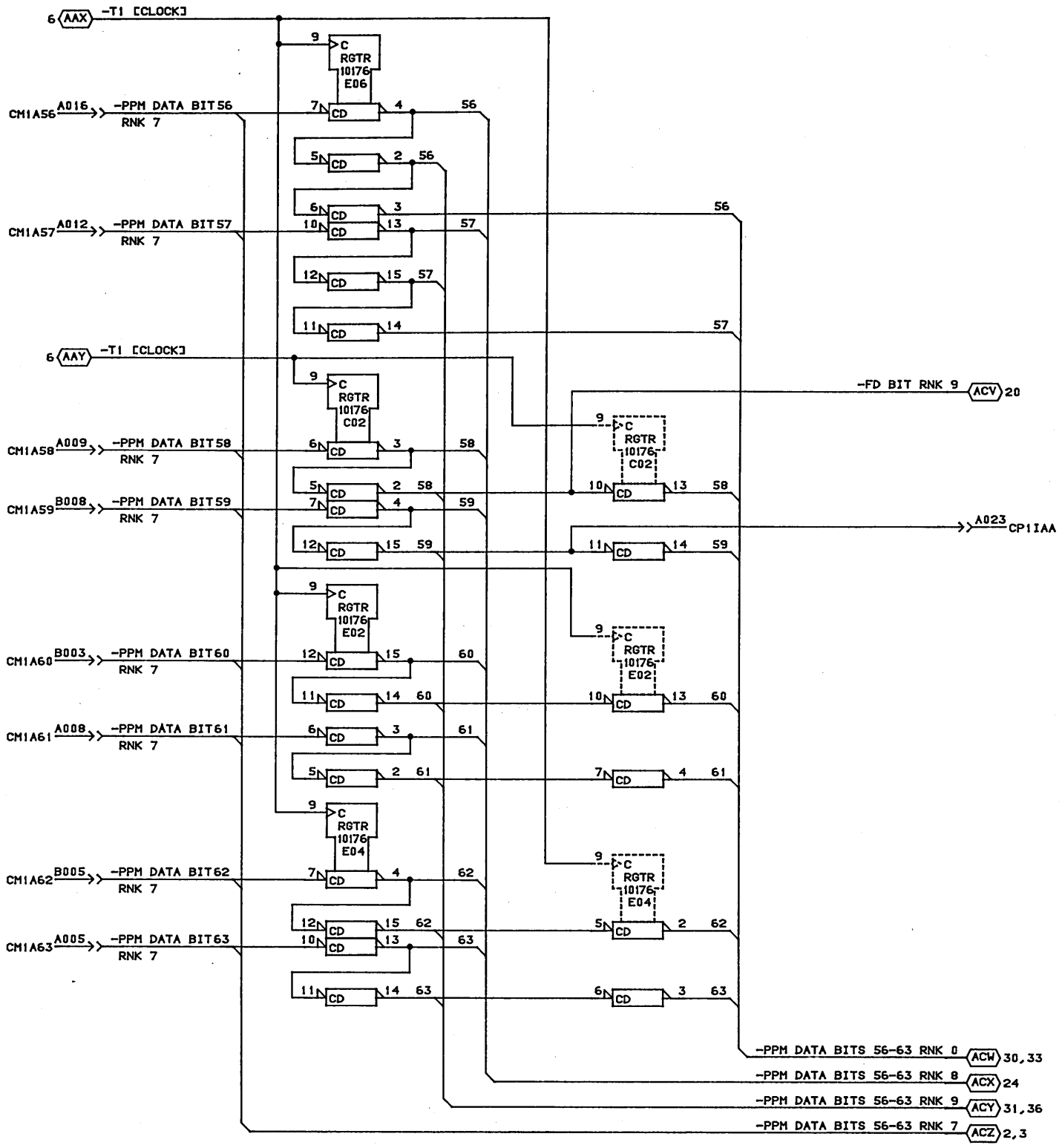

CONTROL DATA CANADA LTD	PPM DATA BITS 56-63 RNKS 0,7,8,9 MODULE ASSY:210 PAK TYPE: 1CP0		C		A
		11-JAN-85	SHEET 23	LOC. D11	

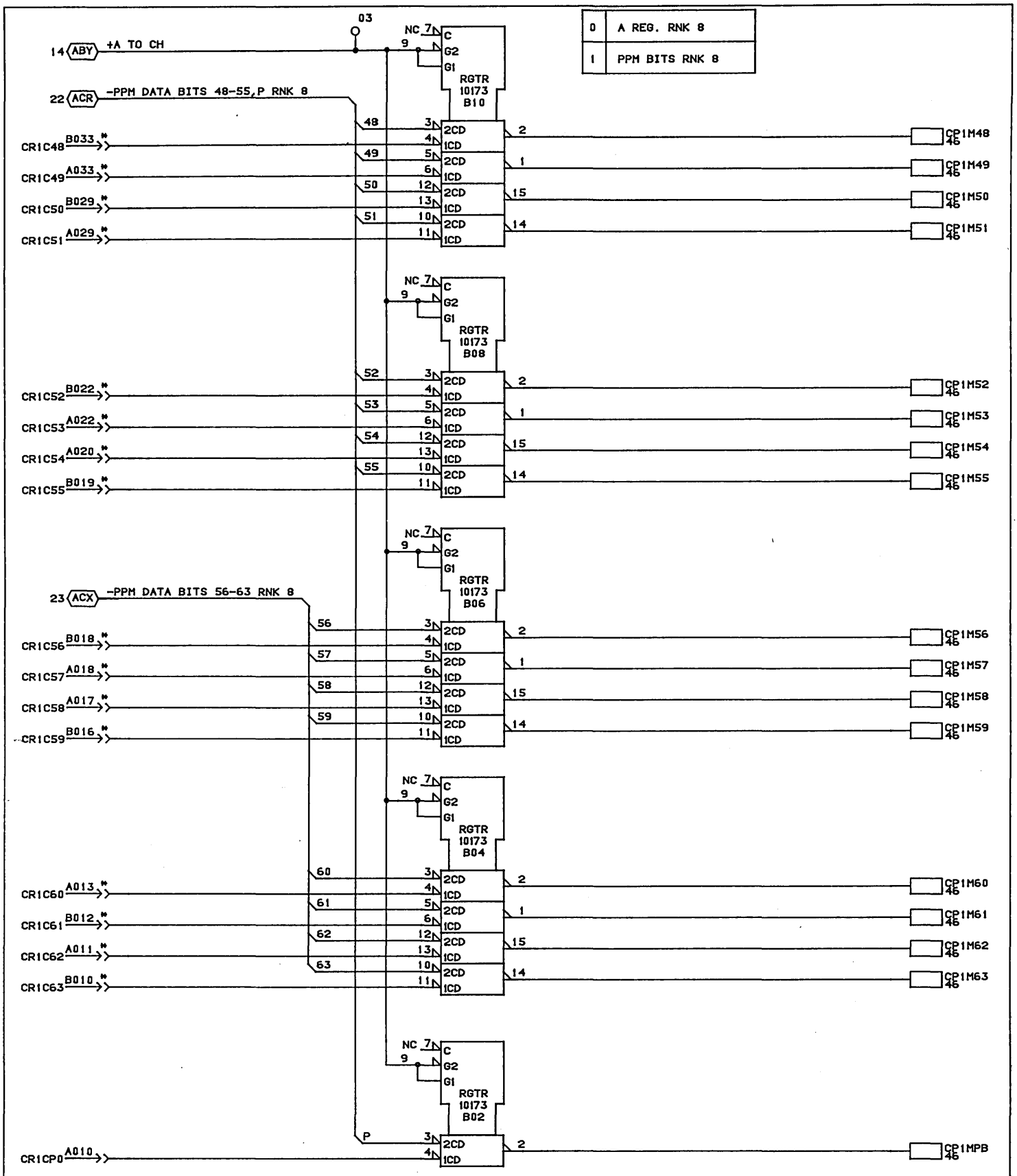

CONTROL DATA CANADA LTD	CHANNEL INPUT MUX MODULE ASSY:210 PAK TYPE: 1CP0	C		A
		11-JAN-85	SHEET 24	LOC. D11

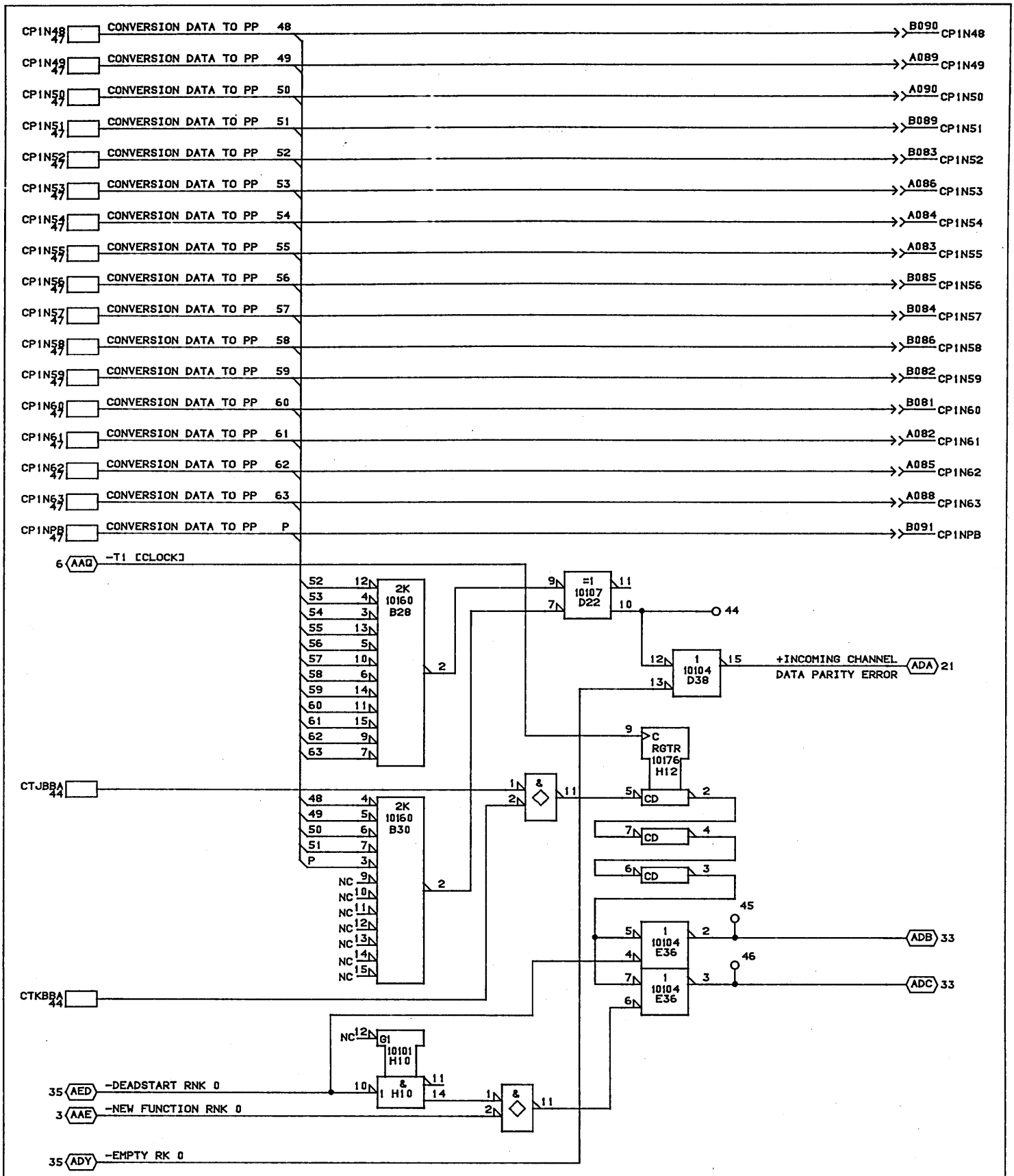

CONTROL DATA CANADA LTD	CHANNEL DAT TO Y MUX K BARREL ENABLES MODULE ASSY:210 PAK TYPE: 1CP0	C		A
		11-JAN-85	SHEET 25	LOC. D11

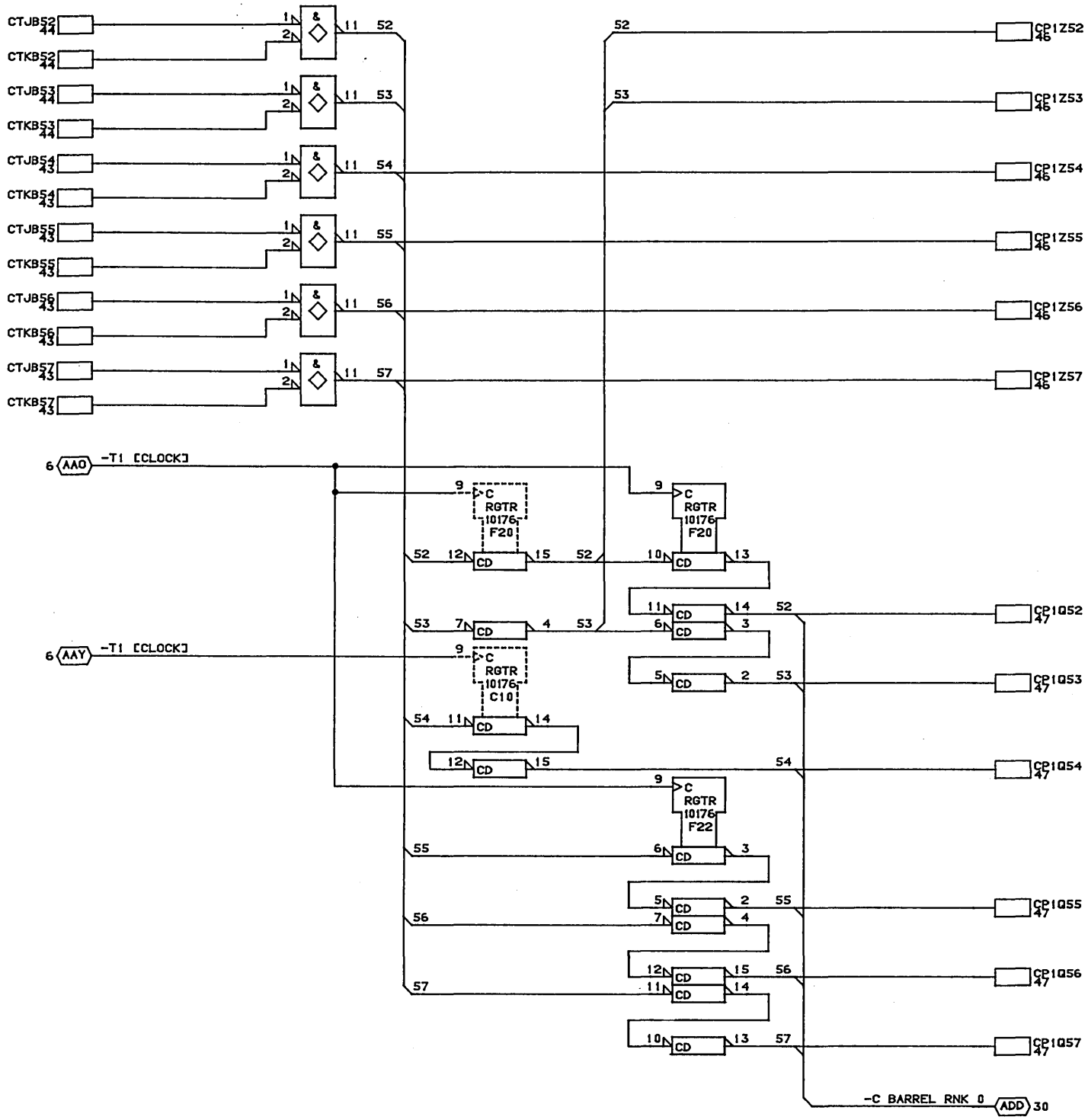

CONTROL DATA CANADA LTD	C BARREL BITS 52-57 MODULE ASSY:210 PAK TYPE: 1CP0	C		A
		11-JAN-85	SHEET 26	LOC. D11

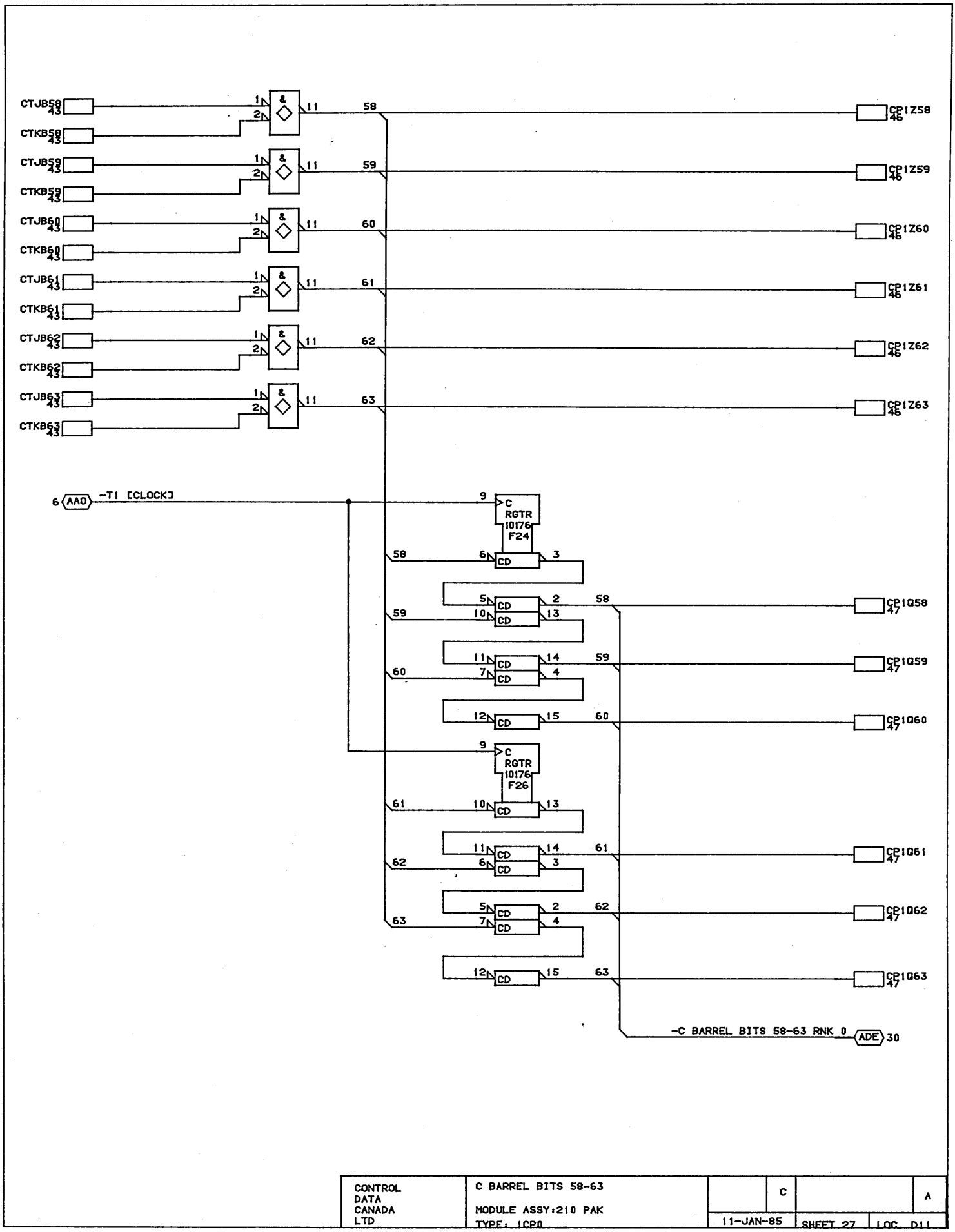

CONTROL DATA CANADA LTD	C BARREL BITS 58-63 MODULE ASSY:210 PAK TYPE: 1CP0		C		A
		11-JAN-85	SHEET 27	LOC. D11	

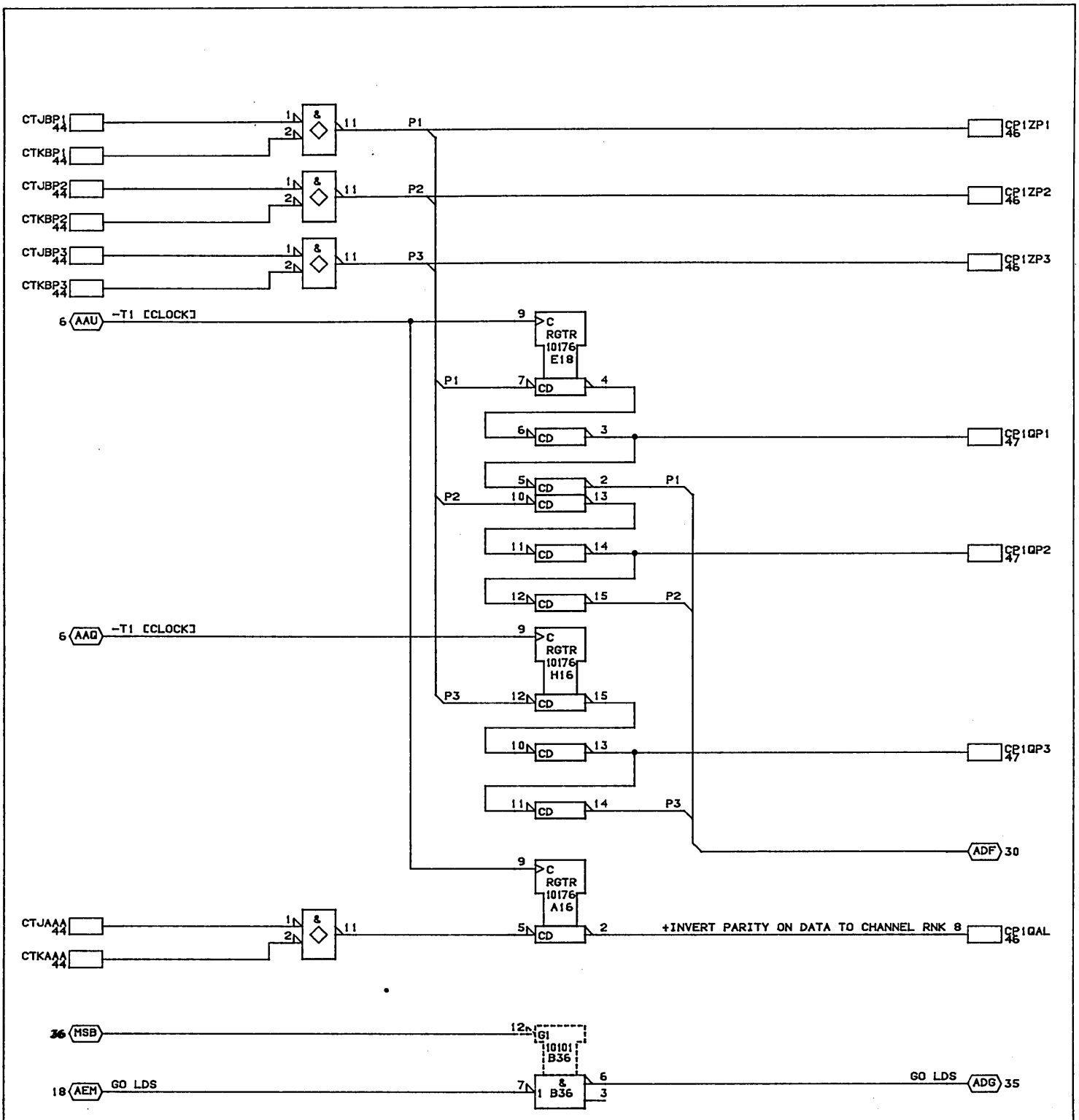

CONTROL DATA CANADA LTD	C BARREL PARITY MODULE ASSY:210 PAK TYPE: 1CP0	C		A
		11-JAN-85	SHEET 28	LOC. D11

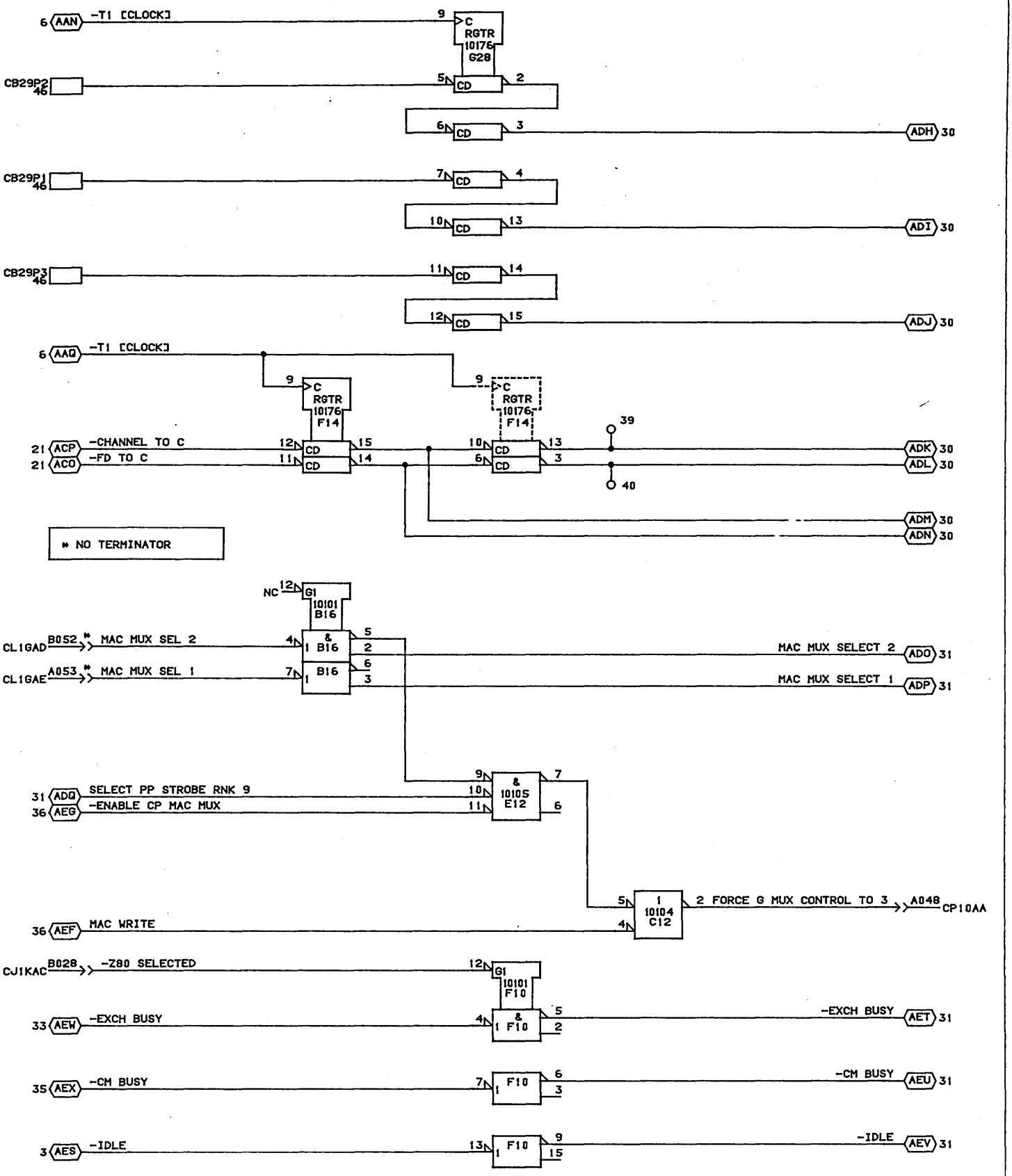

CONTROL DATA CANADA LTD	MAC MUX SELECTS MODULE ASSY:210 PAK TYPE: 1CP0		C		A
		11-JAN-85		SHEET 29	LOC. D11

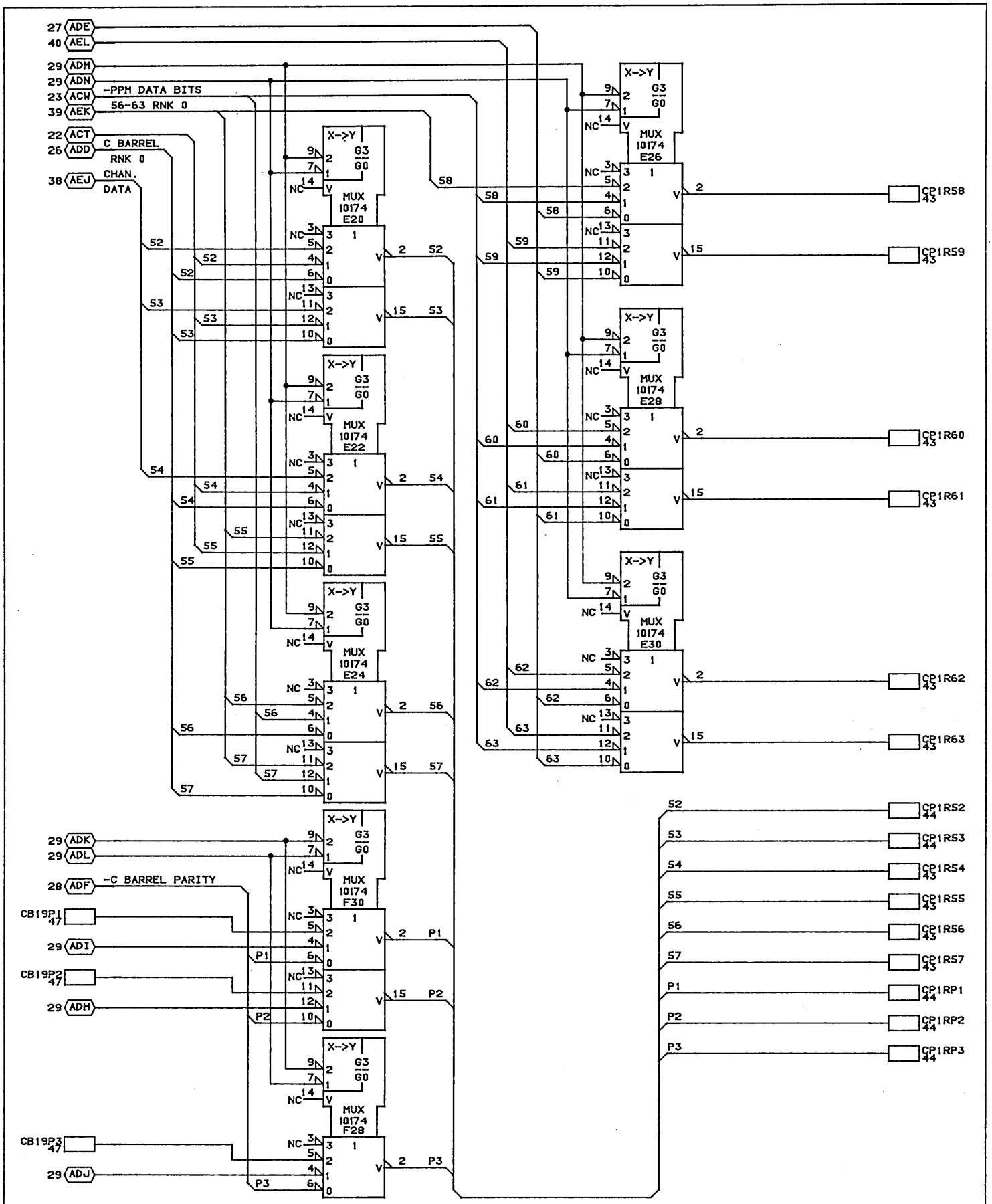

CONTROL DATA CANADA LTD	C BARREL INPUT MUX MODULE ASSY:210 PAK TYPE: 1CP0	C		A
		11-JAN-85	SHEET 30	LOC. D11

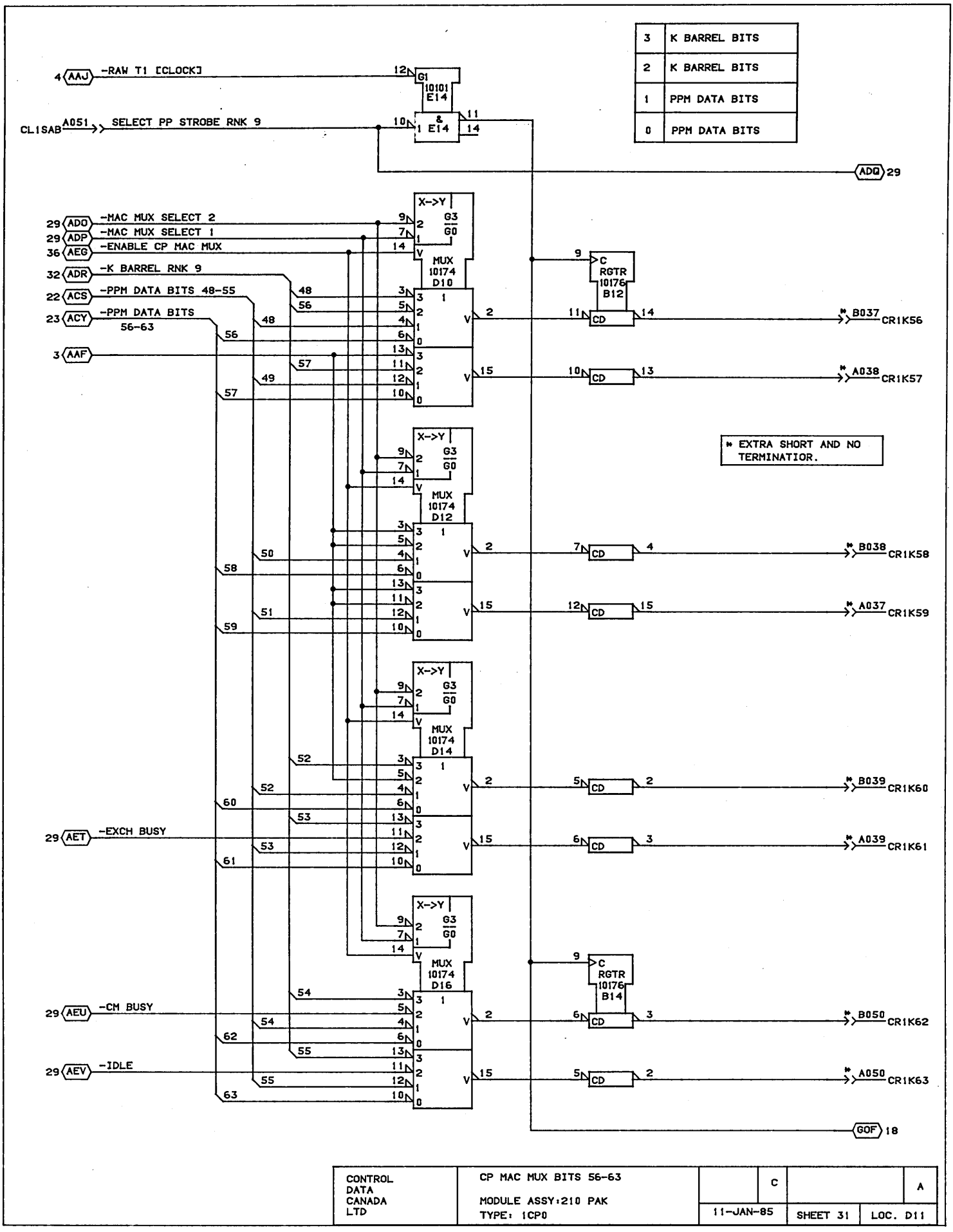

CONTROL DATA CANADA LTD	CP MAC MUX BITS 56-63 MODULE ASSY:210 PAK TYPE: 1CP0	C		A
		11-JAN-85	SHEET 31	LOC. D11

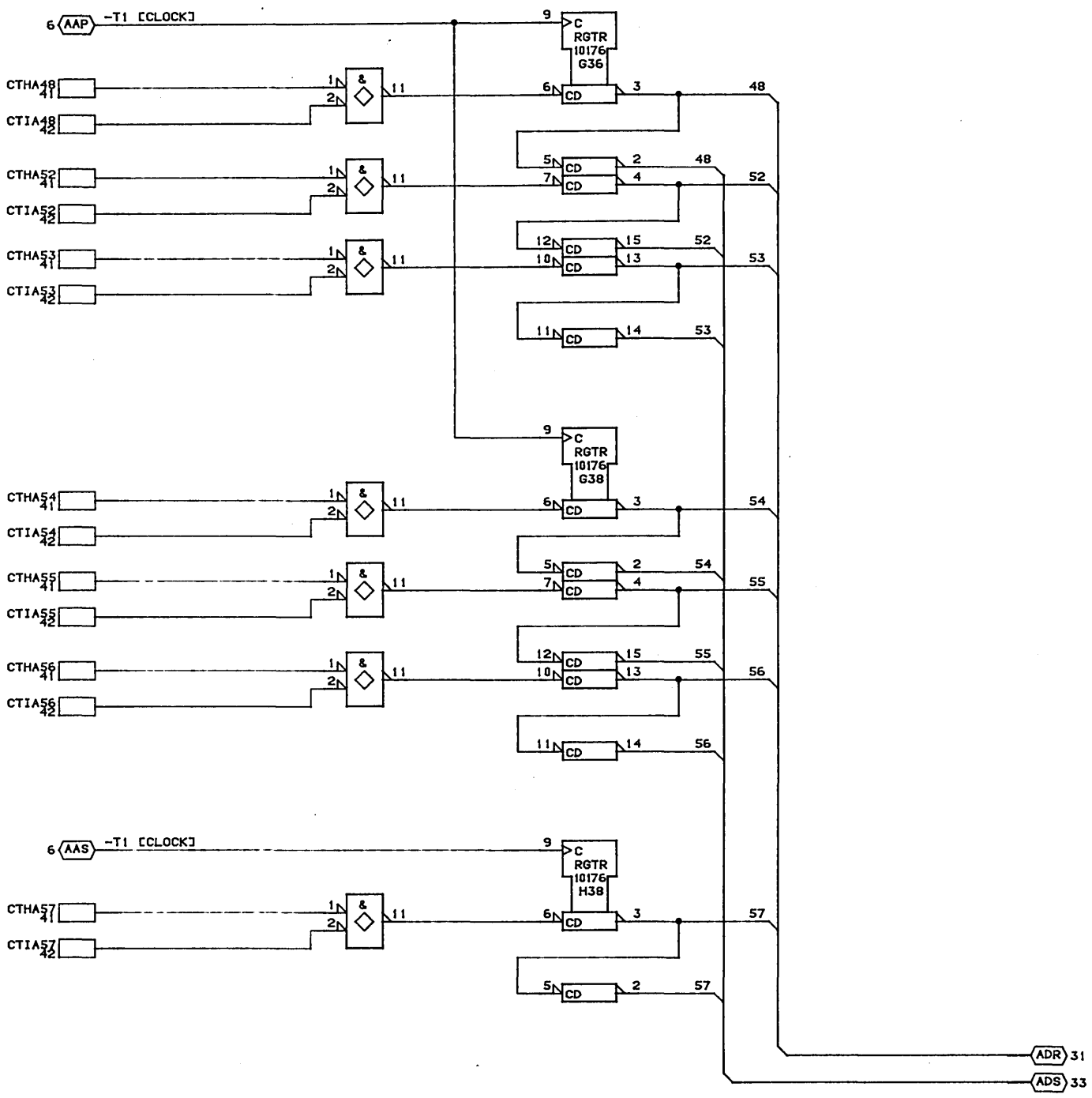

CONTROL DATA CANADA LTD	K BARREL MUX REGISTERS MODULE ASSY:210 PAK TYPE: 1CP0	C		A
		11-JAN-85	SHEET 32	LOC. D11

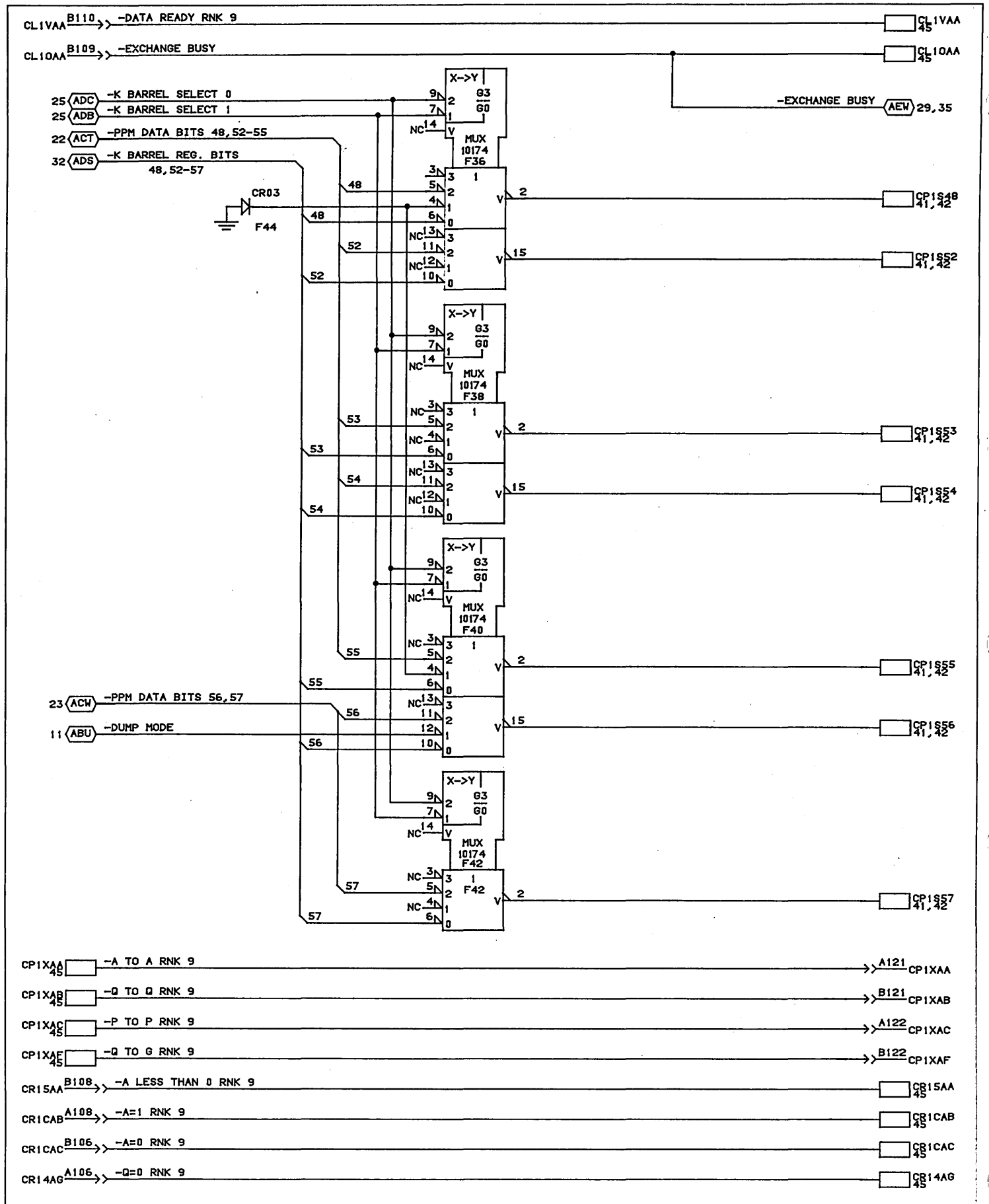

CONTROL DATA CANADA LTD	K BARREL INPUT MUX MODULE ASSY:210 PAK TYPE: 1CP0	C		A
		10-JAN-85	SHEET 33	LOC. D11

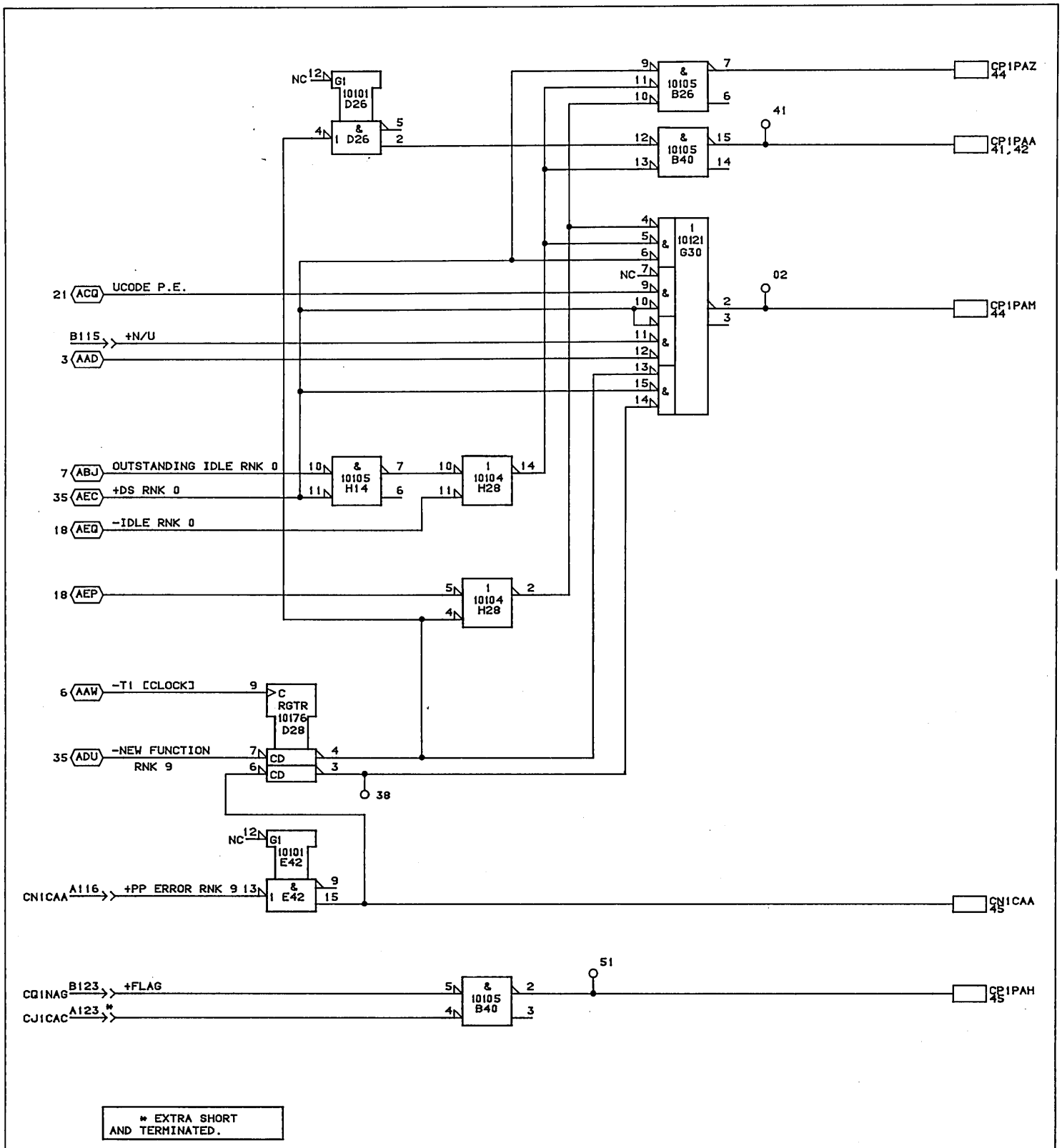

CONTROL DATA CANADA LTD	OUTSTANDING IDLE RNK 0 MODULE ASSY:210 PAK TYPE: 1CP0	C		A
		10-JAN-85	SHEET 34	LOC. D11

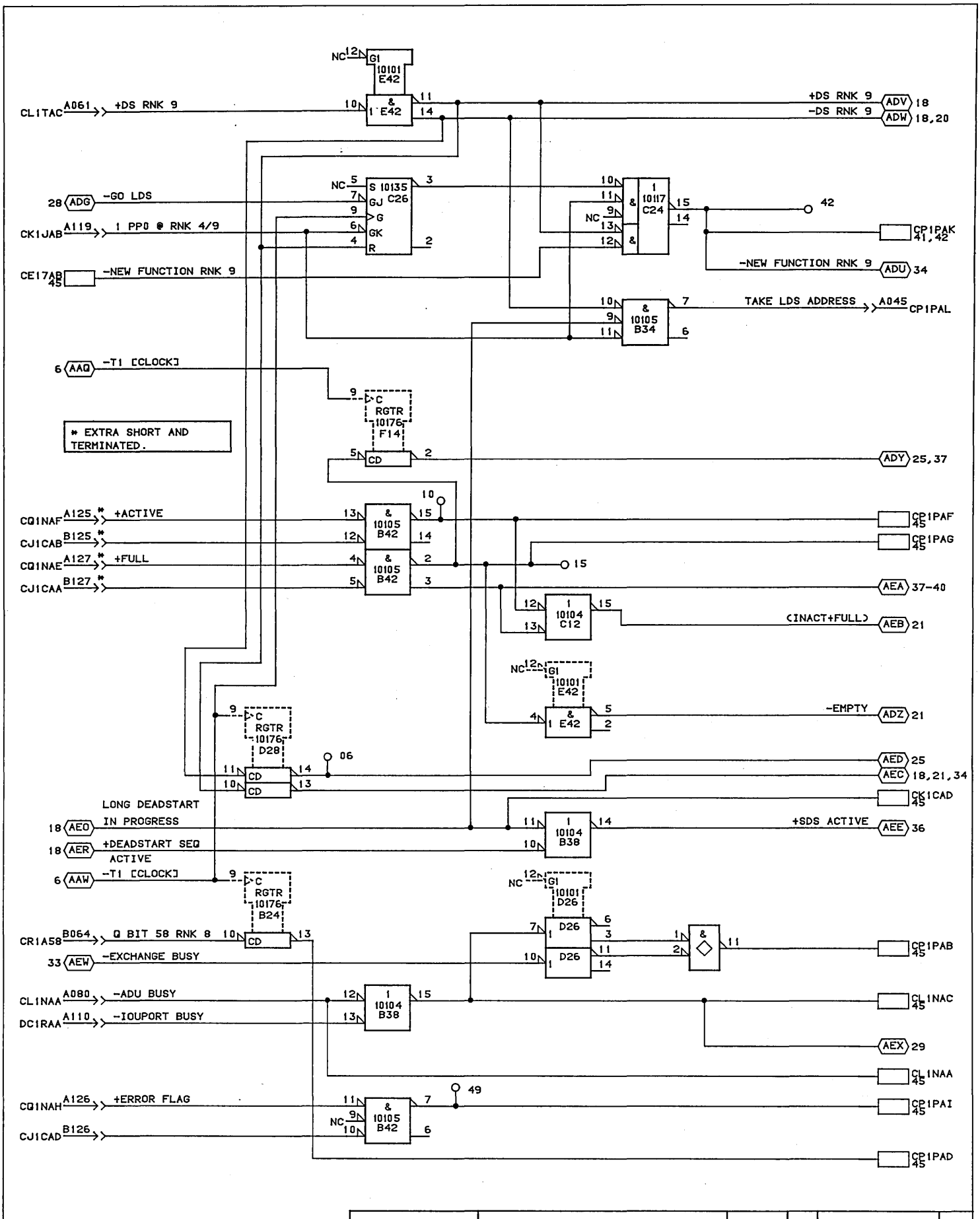

CONTROL DATA CANADA LTD	NEW FUNCTION MODULE ASSY:210 PAK TYPE: 1CP0	C		A
		10-JAN-85	SHEET 35	

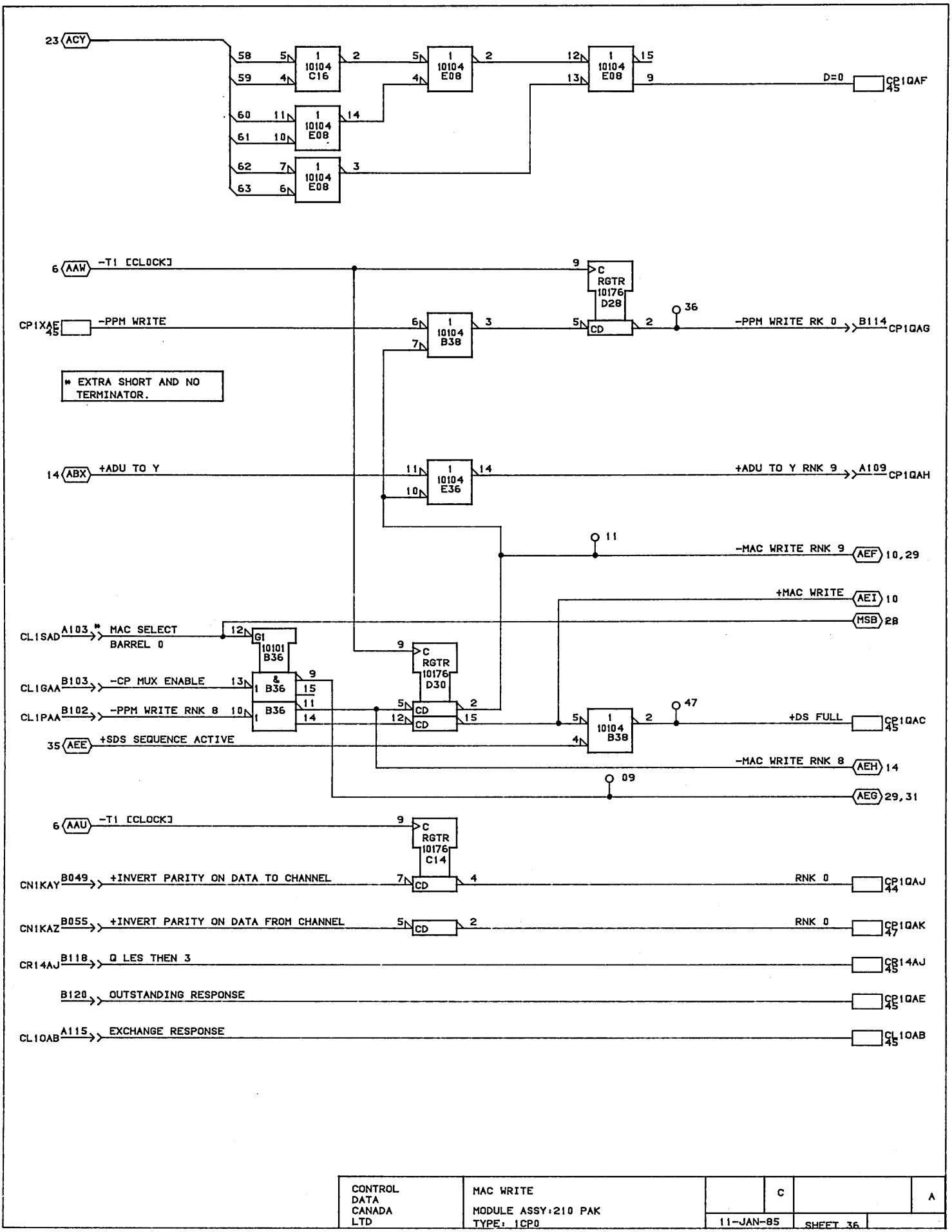

CONTROL DATA CANADA LTD	MAC WRITE MODULE ASSY:210 PAK TYPE: 1CP0	C		A
		11-JAN-85	SHEET 36	

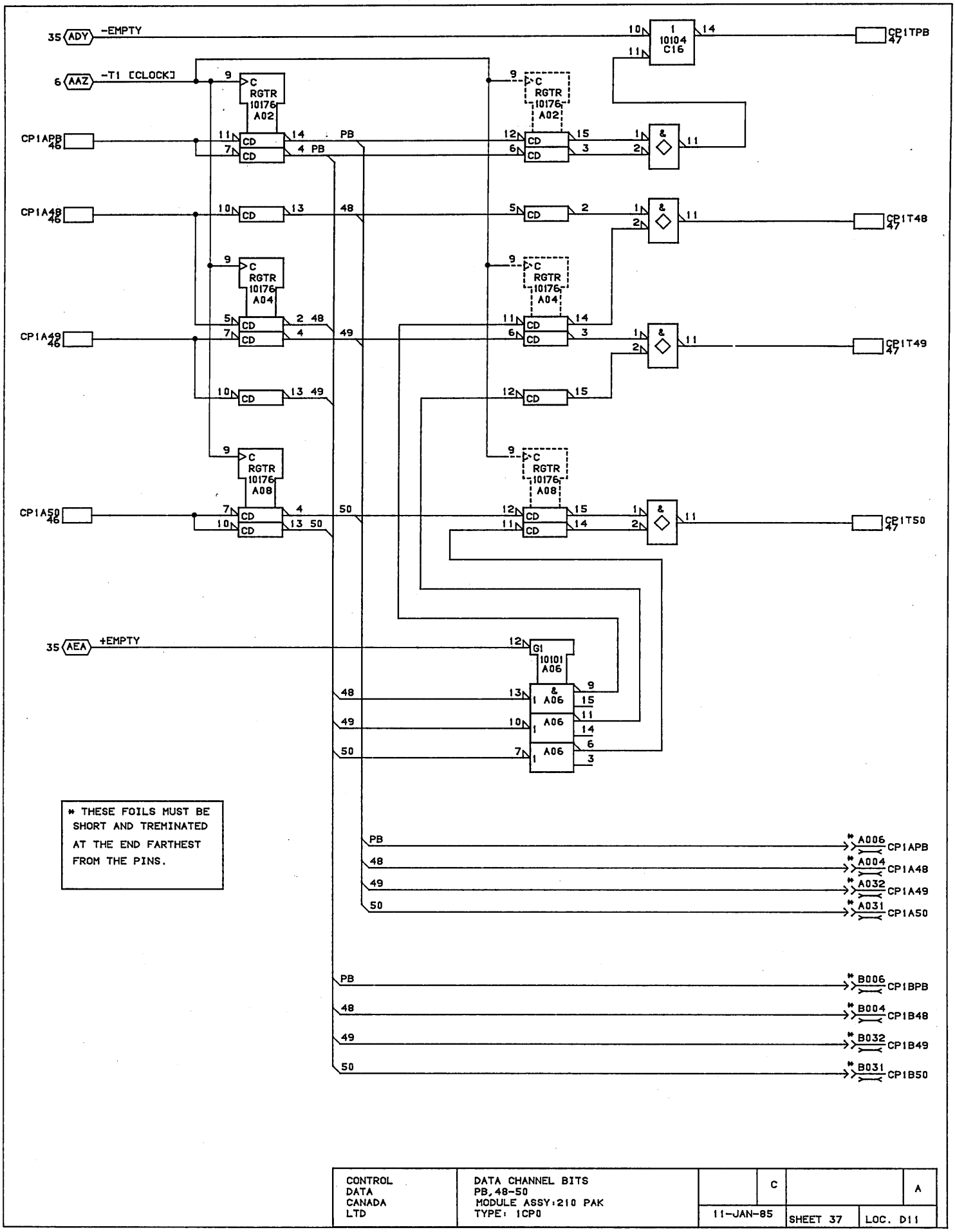

CONTROL DATA CANADA LTD	DATA CHANNEL BITS PB,48-50 MODULE ASSY:210 PAK TYPE: 1CP0	C		A
		11-JAN-85	SHEET 37	LOC. D11

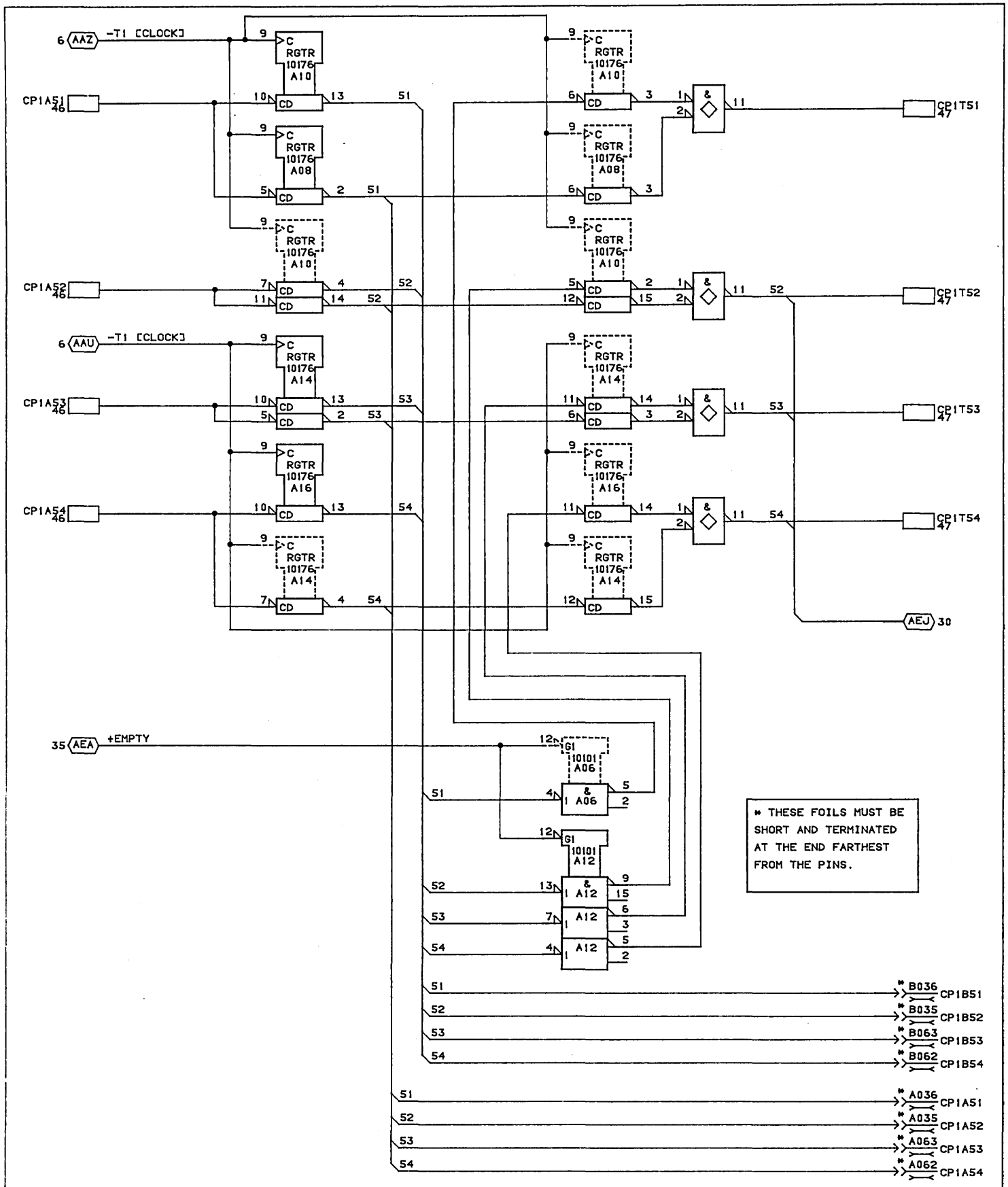

CONTROL DATA CANADA LTD	CHANNEL DATA BITS 51-54 MODULE ASSY:210 PAK TYPE: 1CP0	C		A
		11-JAN-85	SHEET 38	LOC. D11

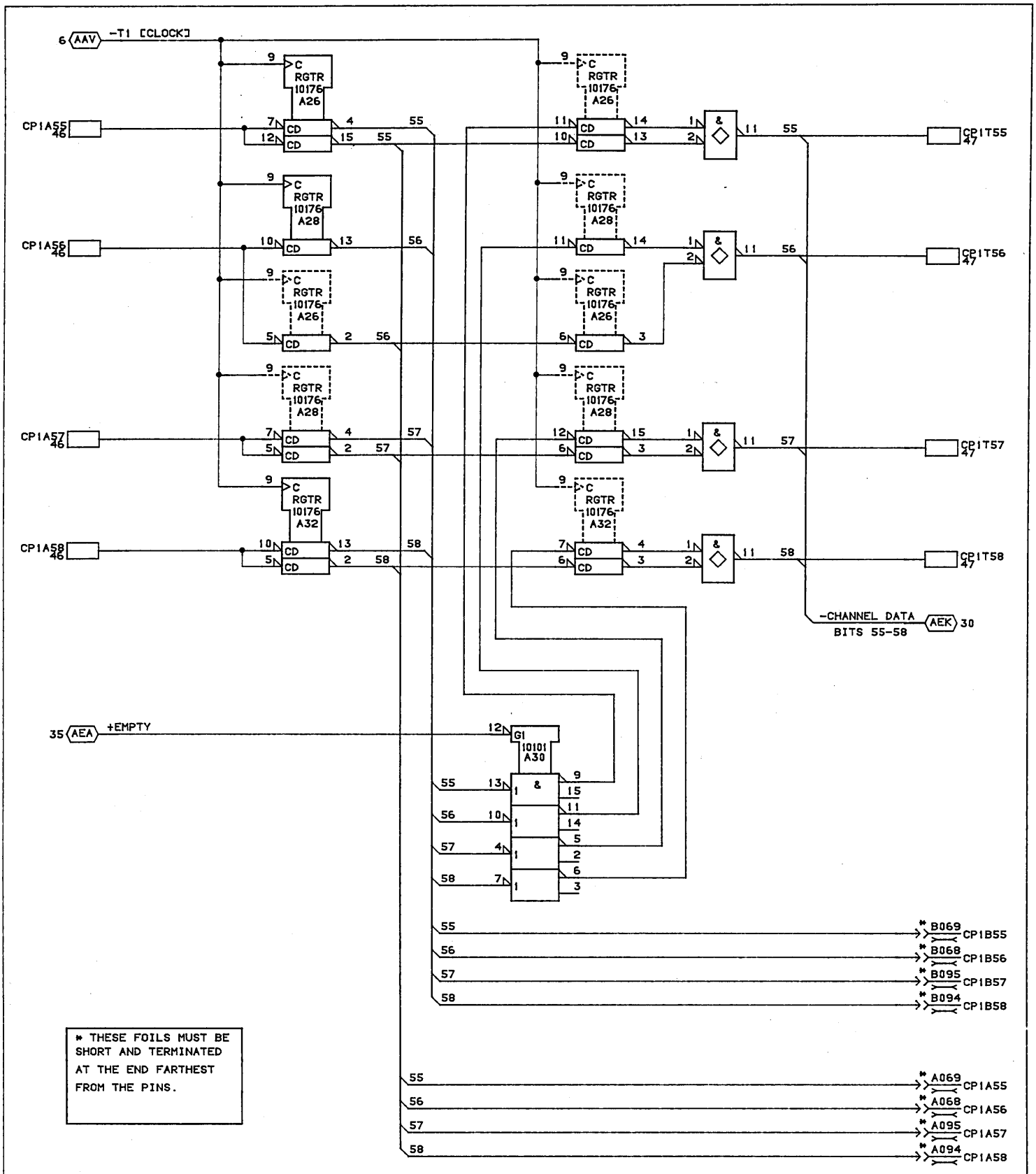

* THESE FOILS MUST BE SHORT AND TERMINATED AT THE END FARTHEST FROM THE PINS.

CONTROL DATA CANADA LTD	CHANNEL DATA BITS 55-58 MODULE ASSY:210 PAK TYPE: 1CP0	C		A
		11-JAN-85	SHEET 39	LOC. D11

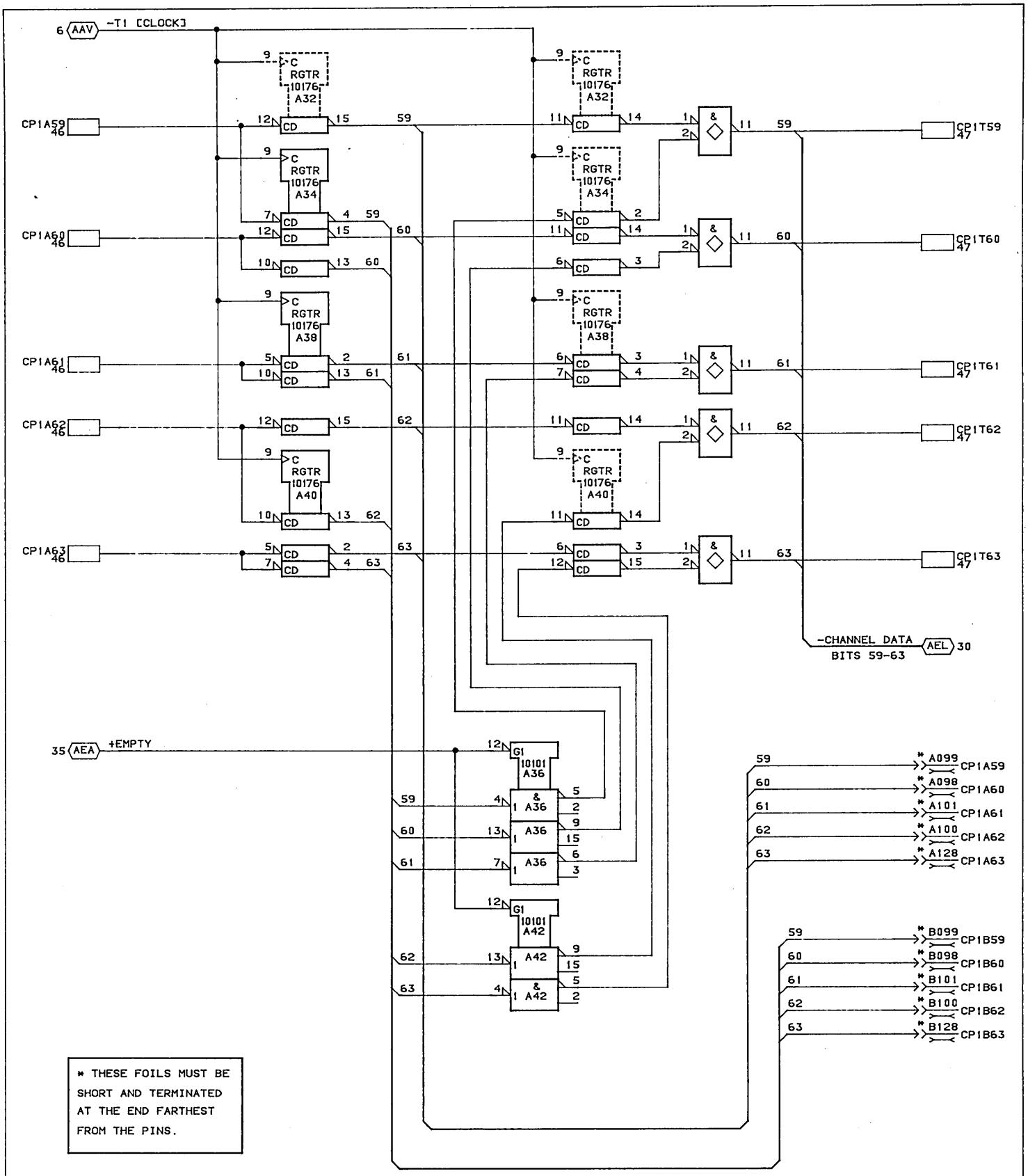

* THESE FOILS MUST BE SHORT AND TERMINATED AT THE END FARTHEST FROM THE PINS.

CONTROL DATA CANADA LTD	CHANNEL DATA BITS 59-63 MODULE ASSY:210 PAK TYPE: 1CP0	C		A
		11-JAN-85	SHEET 40	LOC. D11

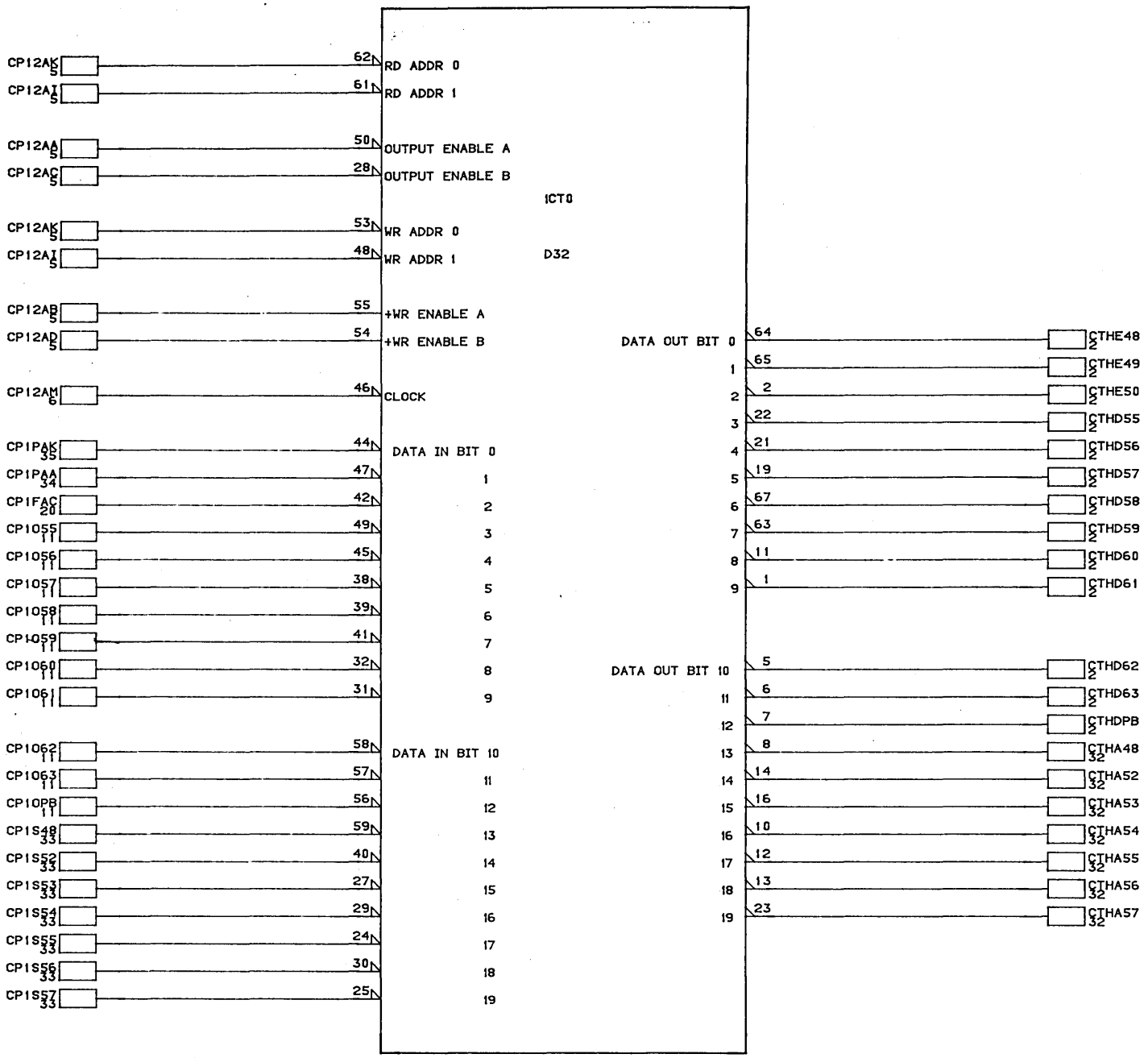

CONTROL DATA CANADA LTD	I BARREL RNK 0-3 K BARREL RNK 1-4 MODULE ASSY:210 PAK TYPE: 1CP0		C		A
		11-JAN-85	SHEET 41	LOC. D11	

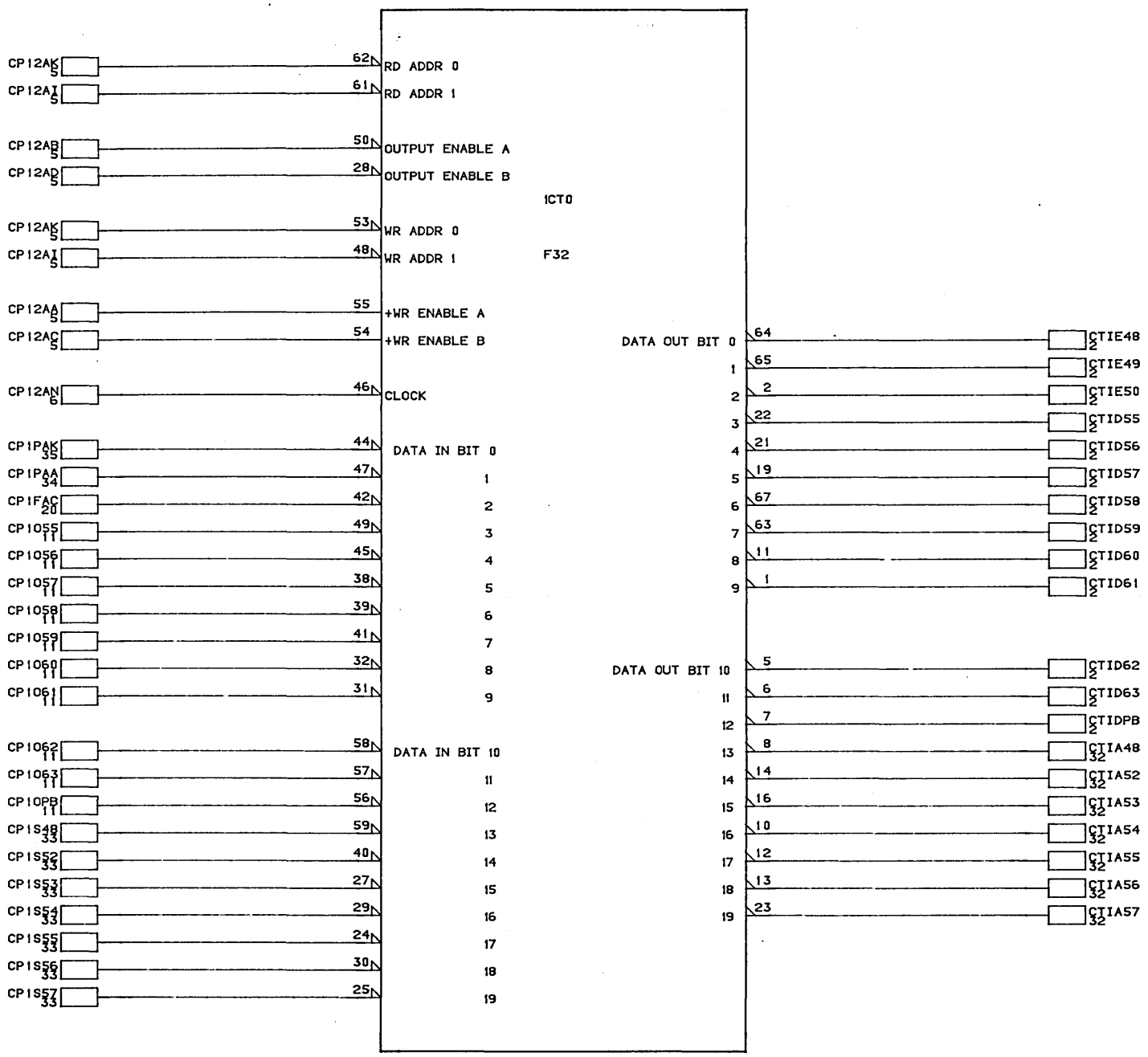

CONTROL DATA CANADA LTD	I BARREL RNK 4-7 K BARREL RNK 5-8 MODULE ASSY:210 PAK TYPE: 1CP0	C		A
		11-JAN-85	SHEET 42	LOC. D11

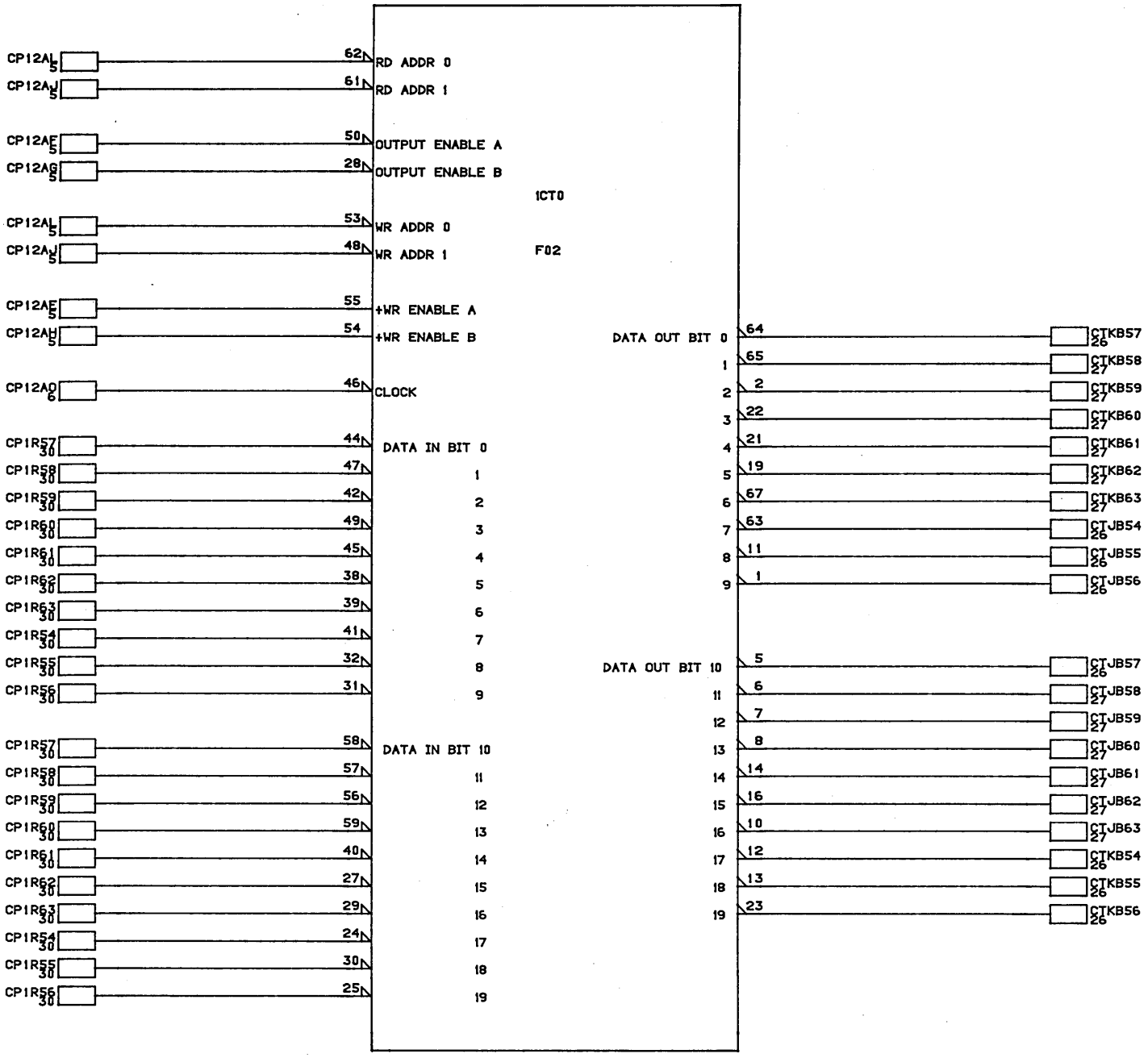

CONTROL DATA CANADA LTD	C BARREL RNK 0-3 C BARREL PARITY RNK 1-4 MODULE ASSY:210 PAK TYPE: 1CP0		C		A
		11-JAN-85	SHEET 43	LOC. D11	

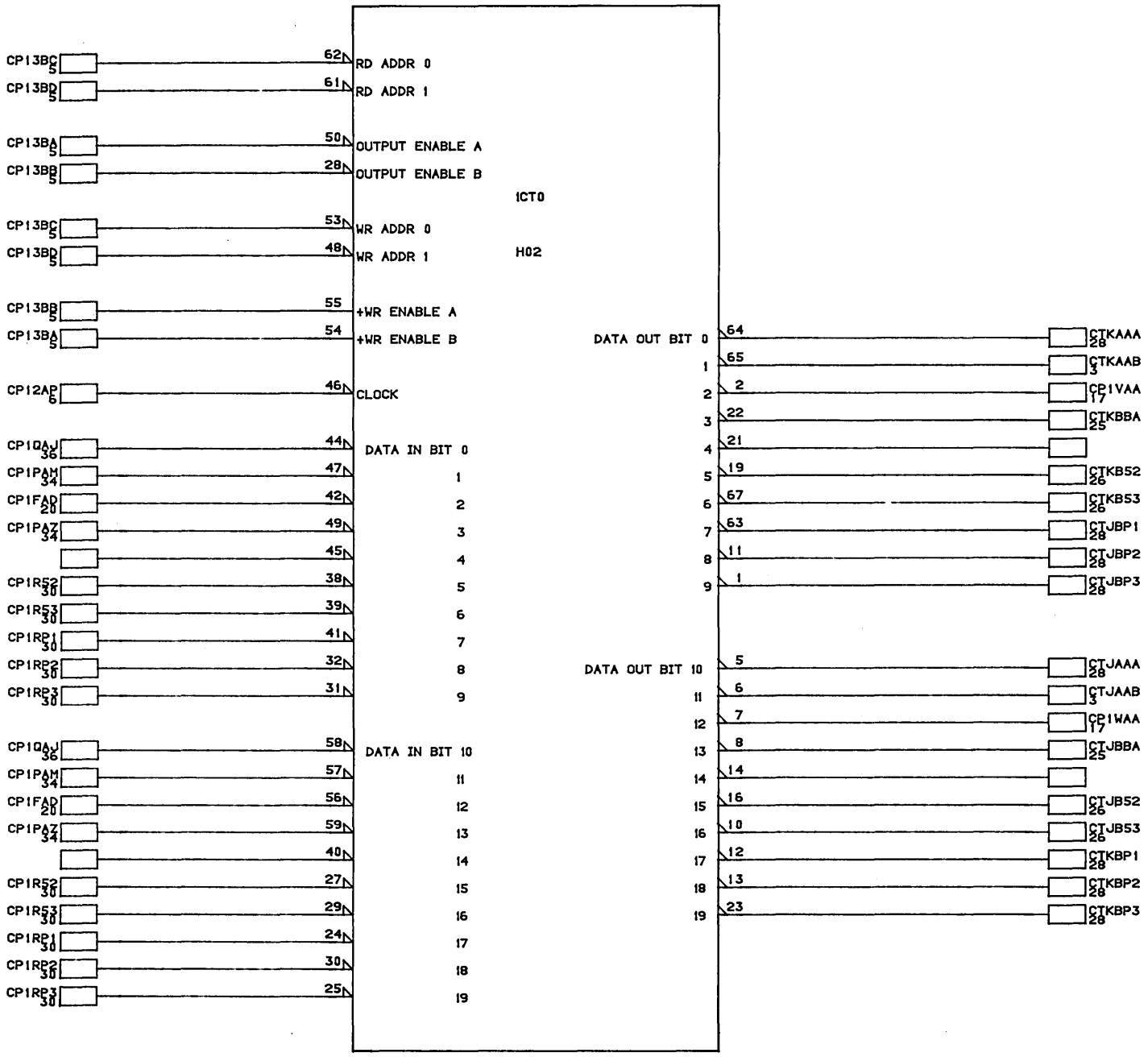

CONTROL DATA CANADA LTD	C BARREL RNK 4-7 C BARREL PARITY RNK 5-8 MODULE ASSY:210 PAK TYPE: 1CP0	C		A
		11-JAN-85	SHEET 44	LOC. D11

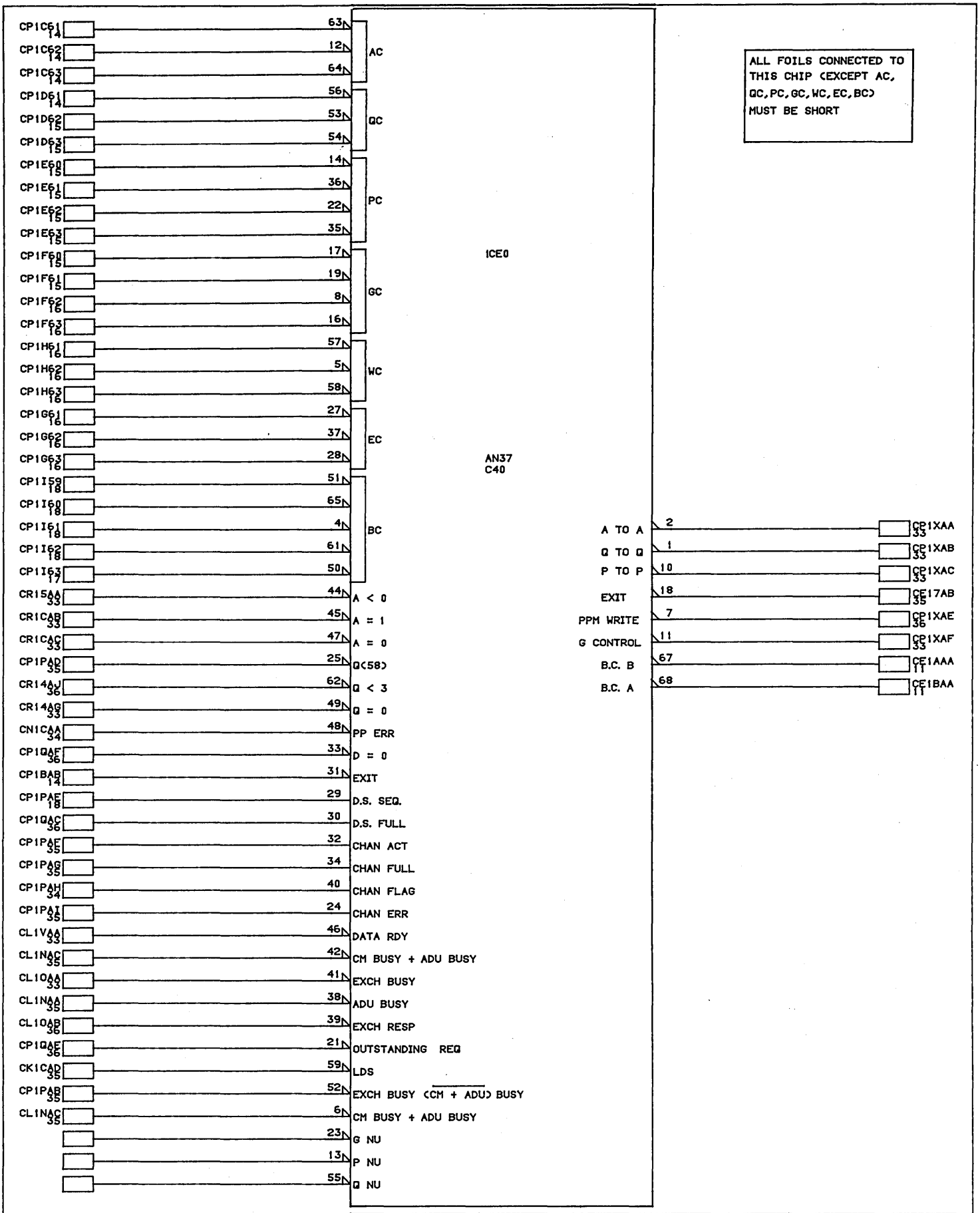

CONTROL DATA CANADA LTD	MODULE ASSY: 210 PAK		C		A
	TYPE: 1CP0	20-APR-85	SHEET 45	LOC. D11	

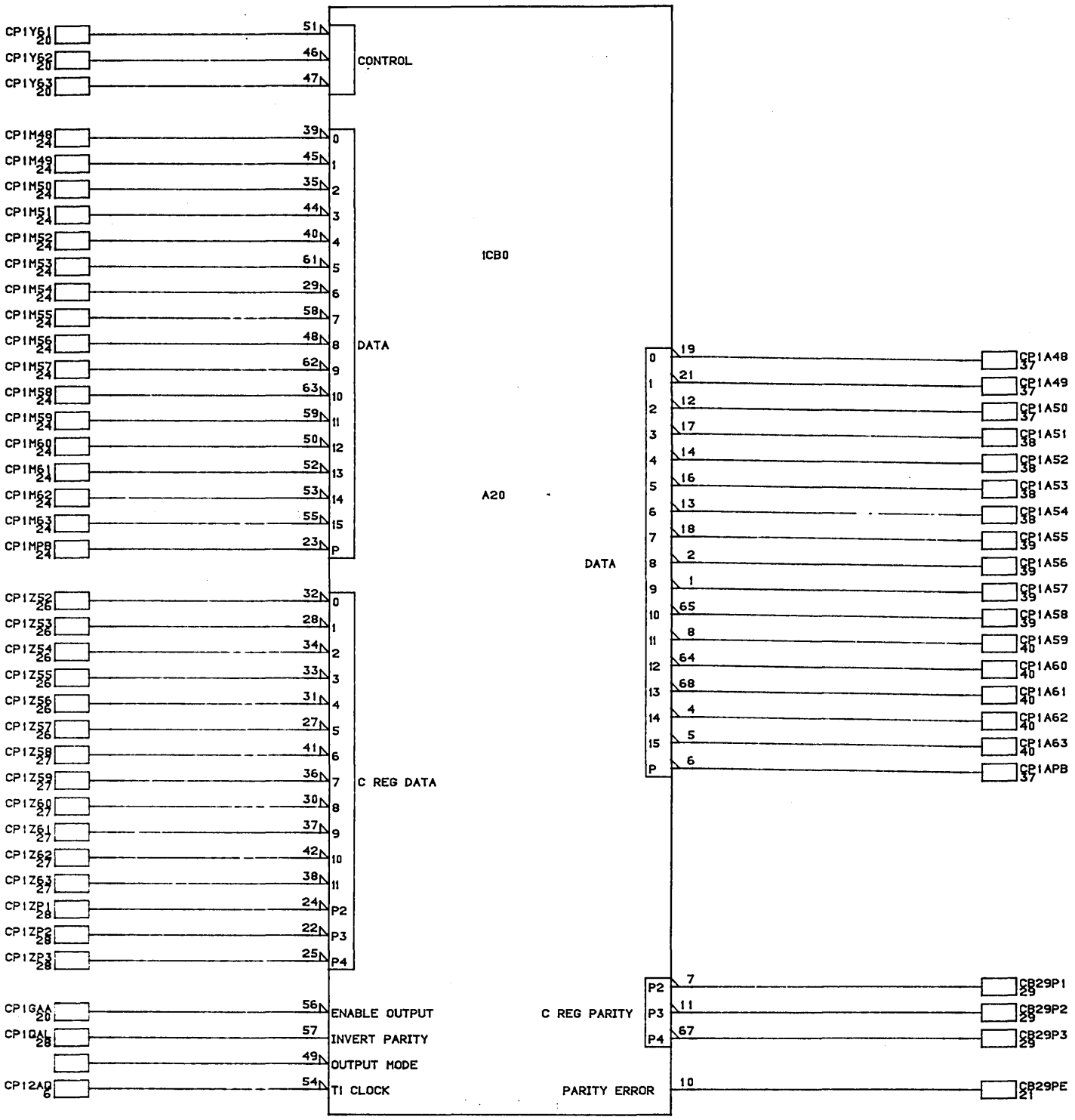

CONTROL DATA CANADA LTD.	OUTPUT CONVERSION CHIP (0)	C		A
	MODULE ASSY:210 PAK			
	TYPE: 1CP0	11-JAN-85	SHEET 46	LOC. D11

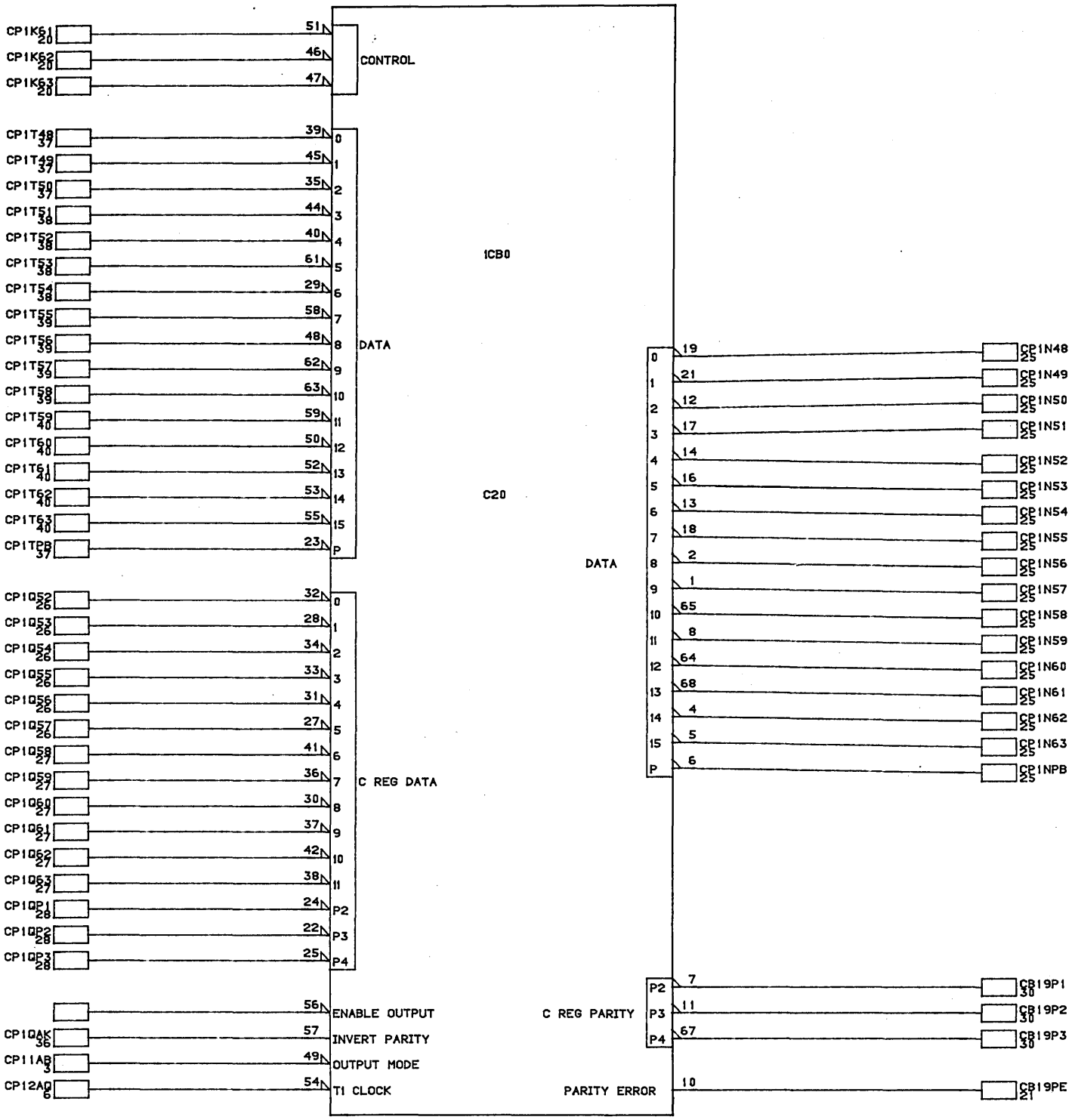

CONTROL DATA CANADA LTD.	INPUT CONVERSION CHIP MODULE ASSY:210 PAK TYPE: 1CP0	C		A
		11-JAN-85	SHEET 47	LOC. D11

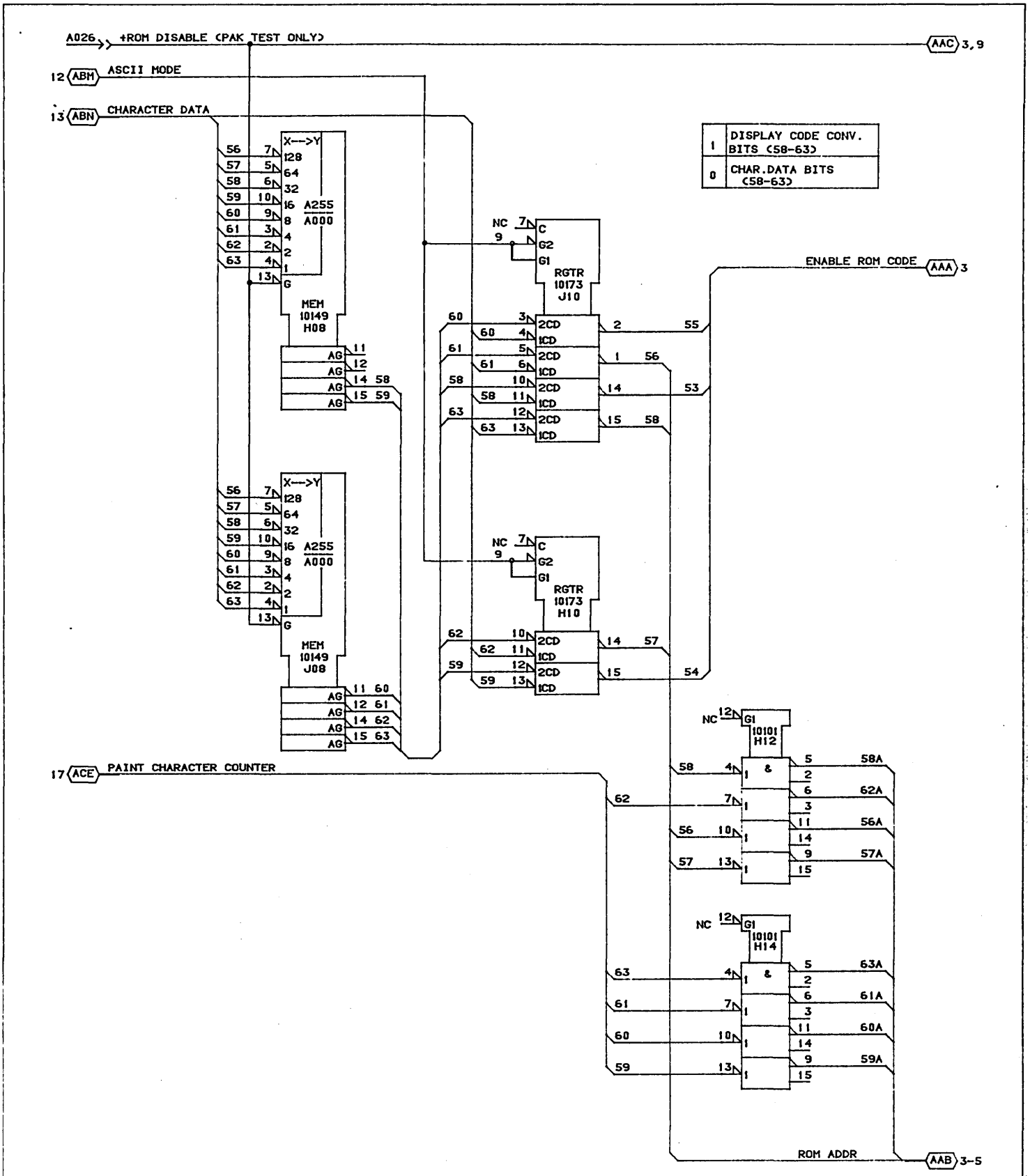

CONTROL DATA CANADA LTD	ASCII TO DISPLAY CODE CONVERSION & ADDRESS FANOUT 210 PAK MODULE ASSEMBLY TYPE: 1CQ0	C		D
		01-APR-85	SHEET 02	

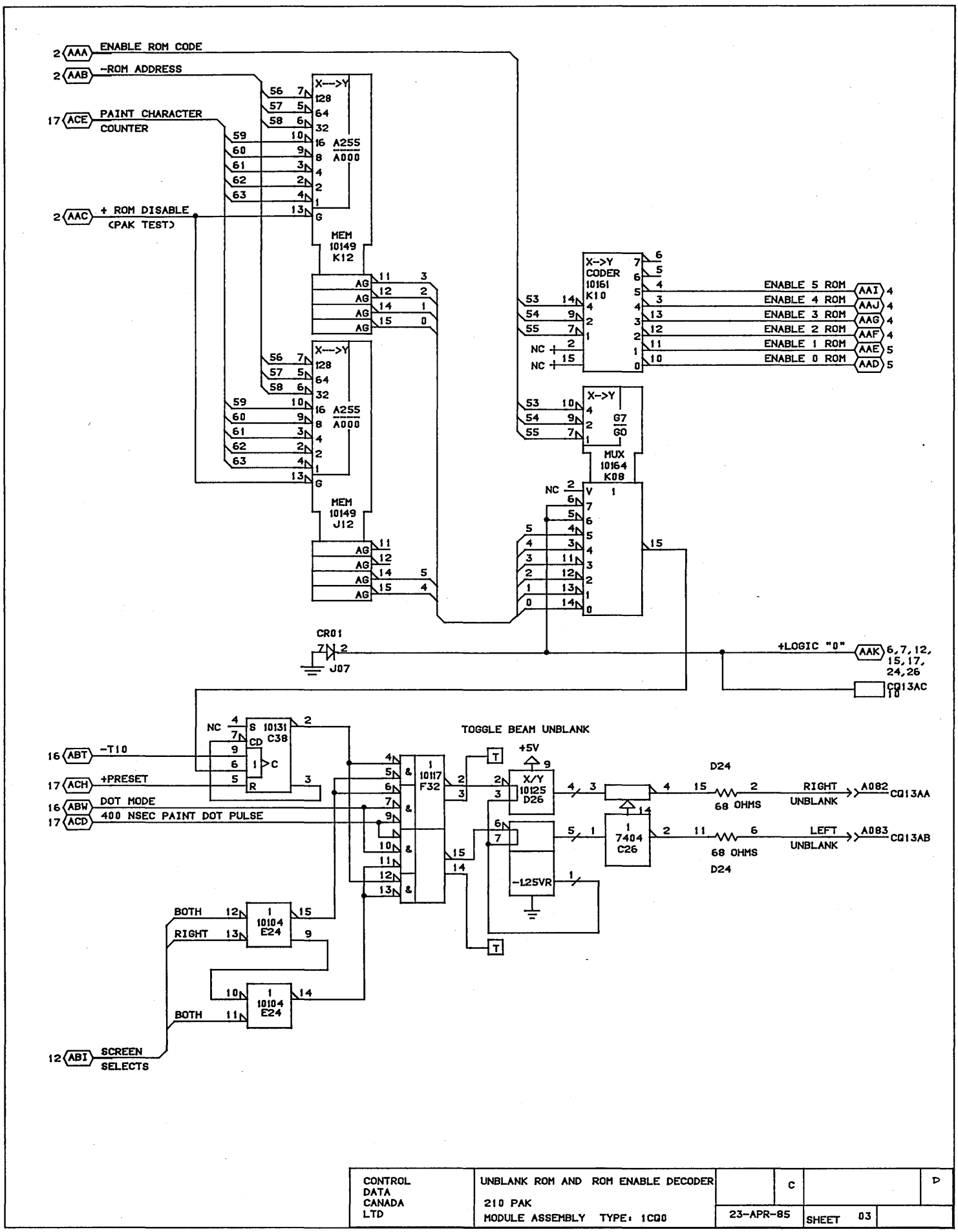

CONTROL DATA CANADA LTD	UNBLANK ROM AND ROM ENABLE DECODER 210 PAK MODULE ASSEMBLY TYPE: 1CQ0	C		D
		23-APR-85	SHEET 03	

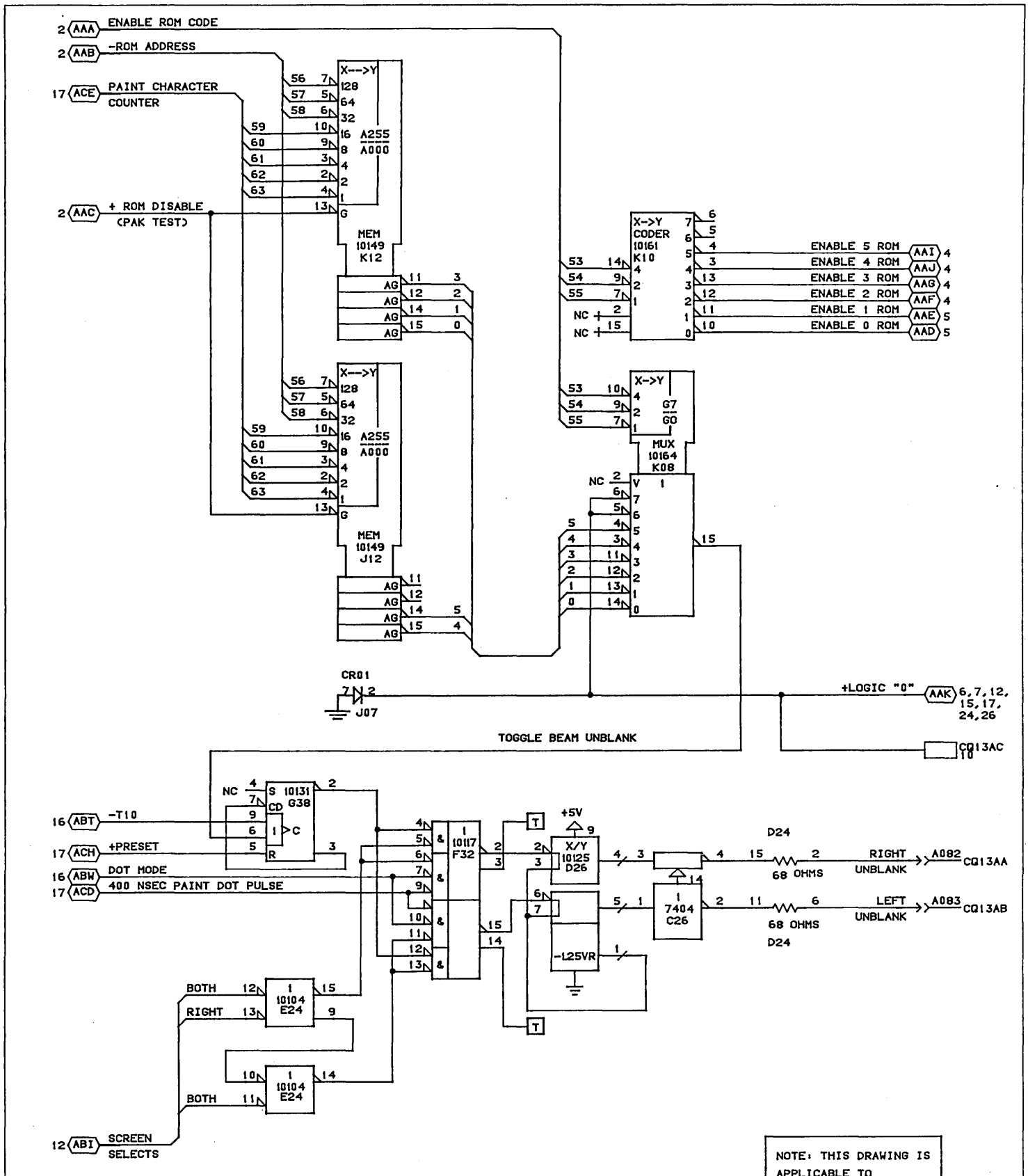

NOTE: THIS DRAWING IS APPLICABLE TO PWB 19268188 ONLY.

CONTROL DATA CANADA LTD	UNBLANK ROM AND ROM ENABLE DECODER 210 PAK MODULE ASSEMBLY TYPE: 1CQ0	C		D
		01-APR-85	SHEET 03A	

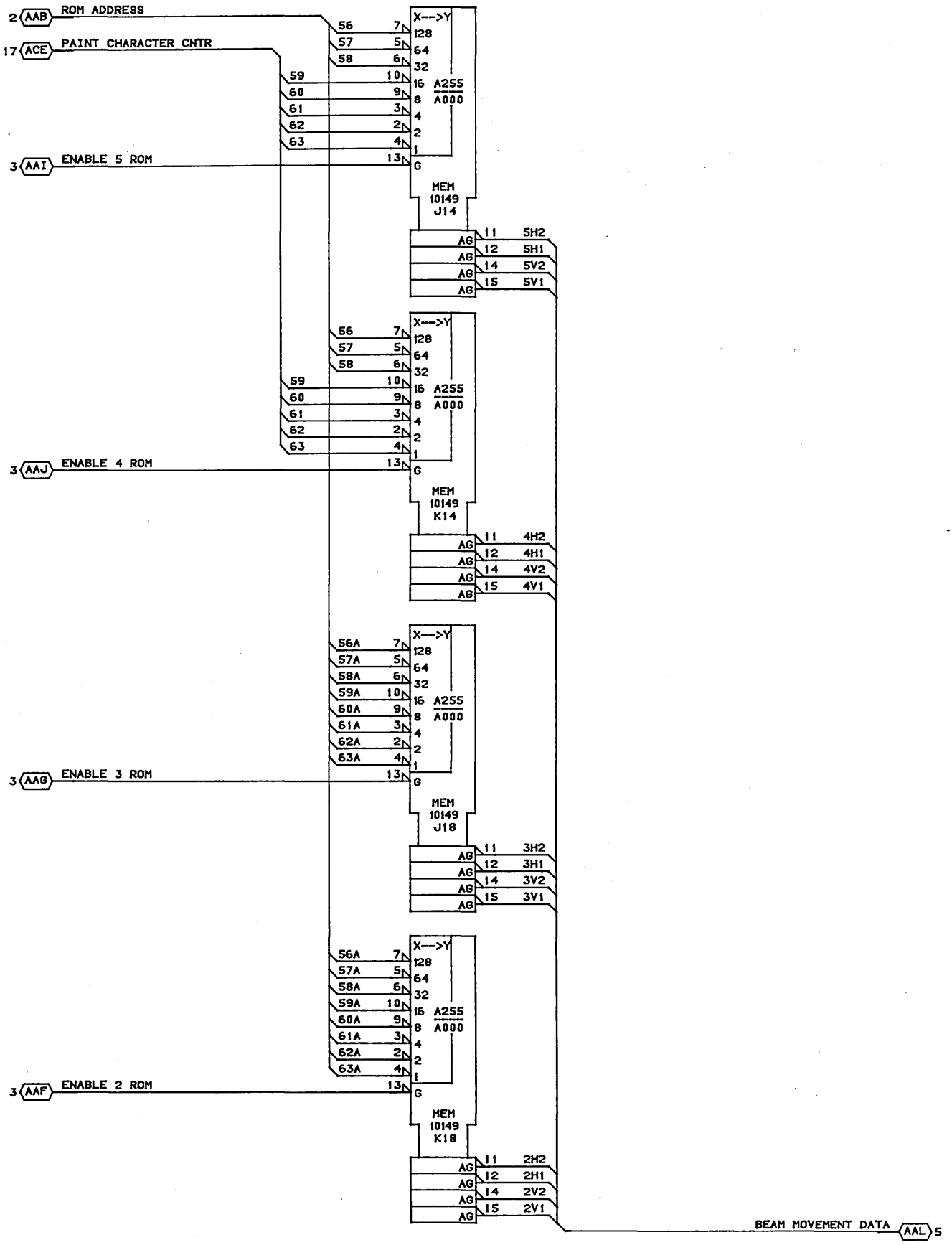

CONTROL DATA CANADA LTD	BEAM MOVEMENT ROMS FOR DISPLAY CODE 20-57 CHARACTERS 210 PAK MODULE ASSEMBLY TYPE: 1CQ0	C		D
		23-APR-85	SHEET 04	

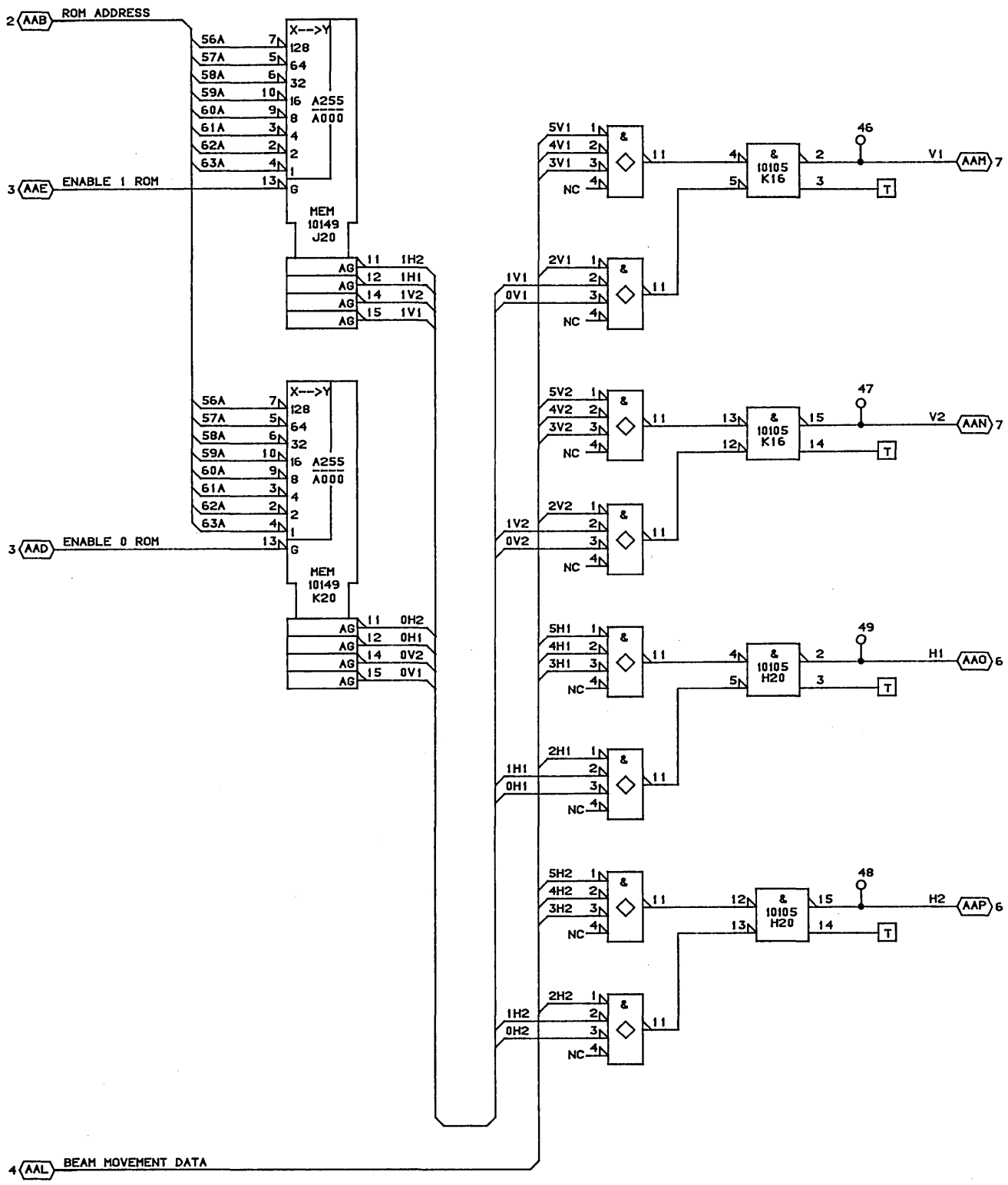

CONTROL DATA CANADA LTD	BEAM MOVEMENT ROMS FOR DISPLAY CODE 0-17 CHARACTERS 210 PAK MODULE ASSEMBLY TYPE: 1CQ0	C		D
		01-APR-85	SHEET 05	

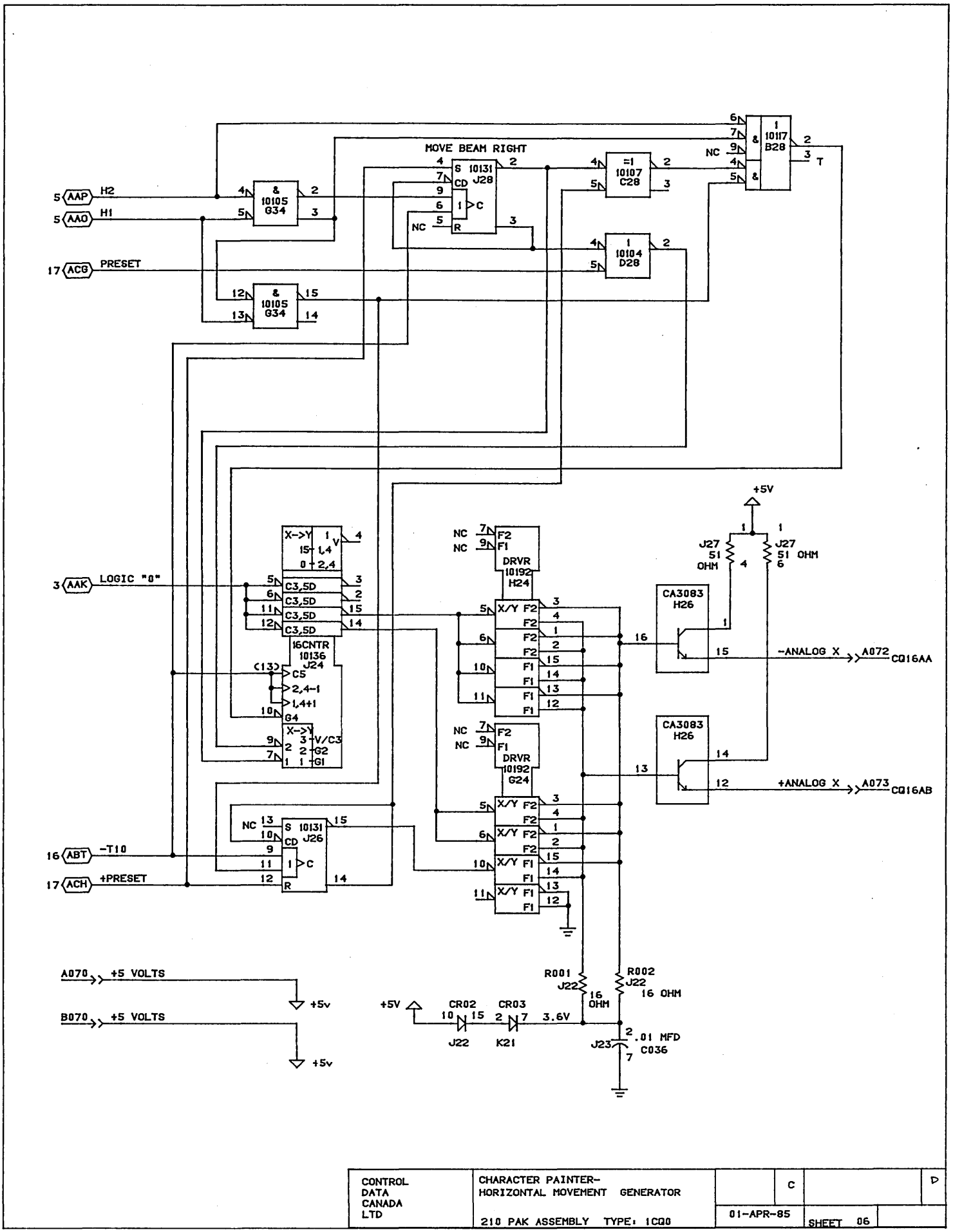

CONTROL DATA CANADA LTD	CHARACTER PAINTER- HORIZONTAL MOVEMENT GENERATOR 210 PAK ASSEMBLY TYPE: 1CQ0	C	D
		01-APR-85	SHEET 06

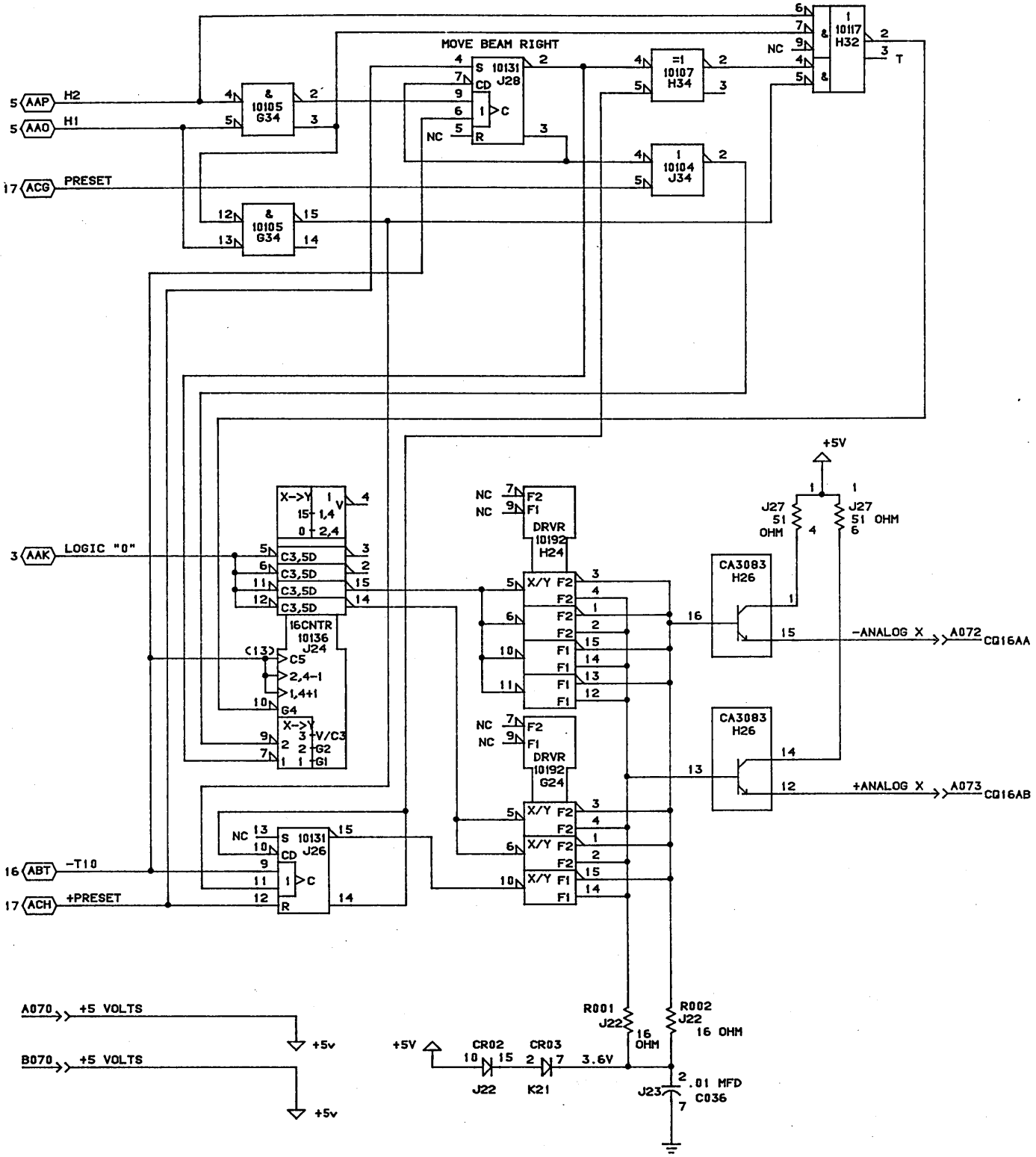

NOTE: THIS DRAWING IS APPLICABLE TO PWB 19268188 ONLY.

CONTROL DATA CANADA LTD	CHARACTER PAINTER- HORIZONTAL MOVEMENT GENERATOR 210 PAK ASSEMBLY TYPE: 1CQ0	C		D
		02-APR-85	SHEET 06A	

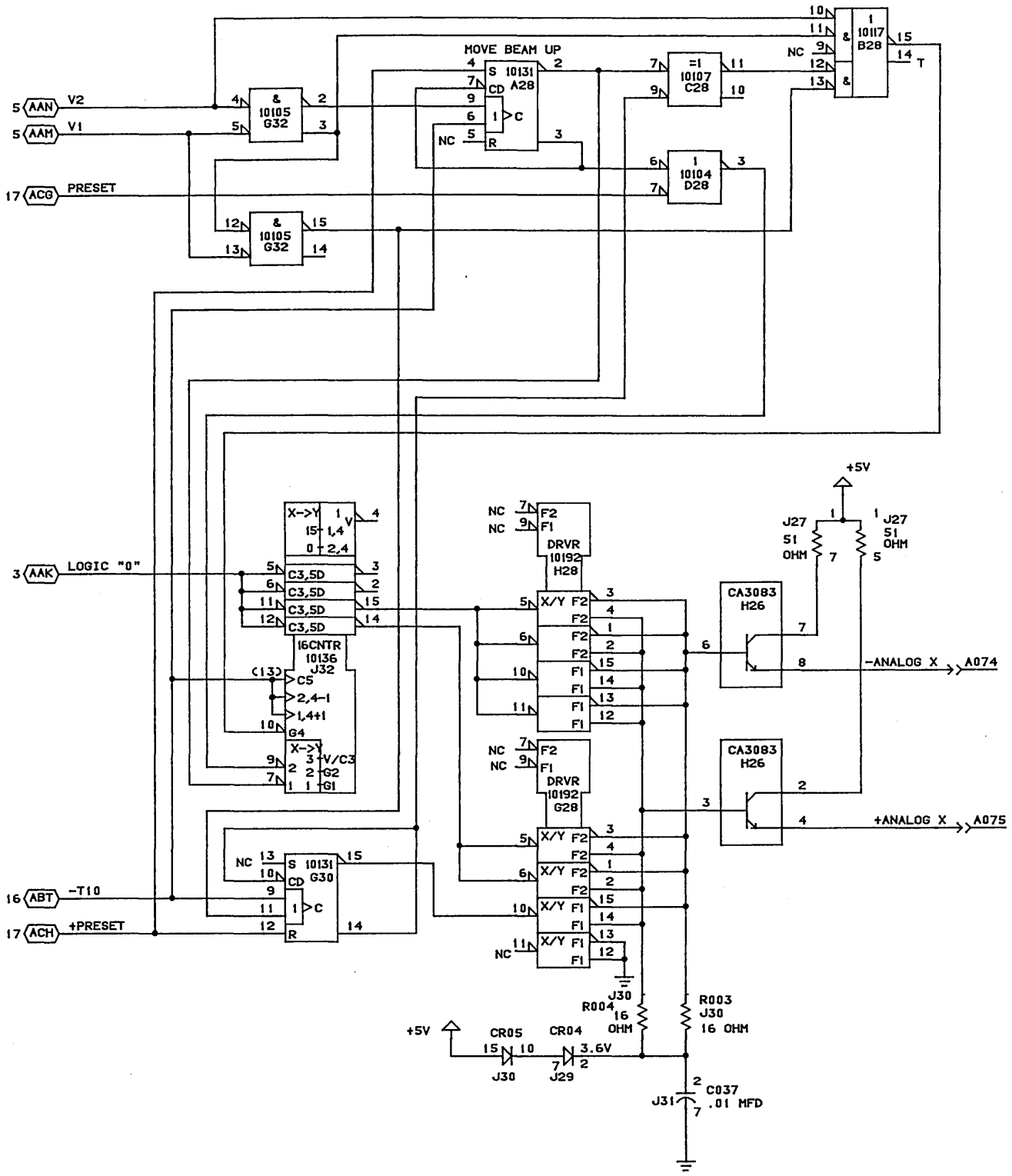

CONTROL DATA CANADA LTD	CHARACTER PAINTER- VERTICAL MOVEMENT GENERATOR 210 PAK ASSEMBLY TYPE: 1CQ0	C		D
		29-MAR-85	SHEET 07	

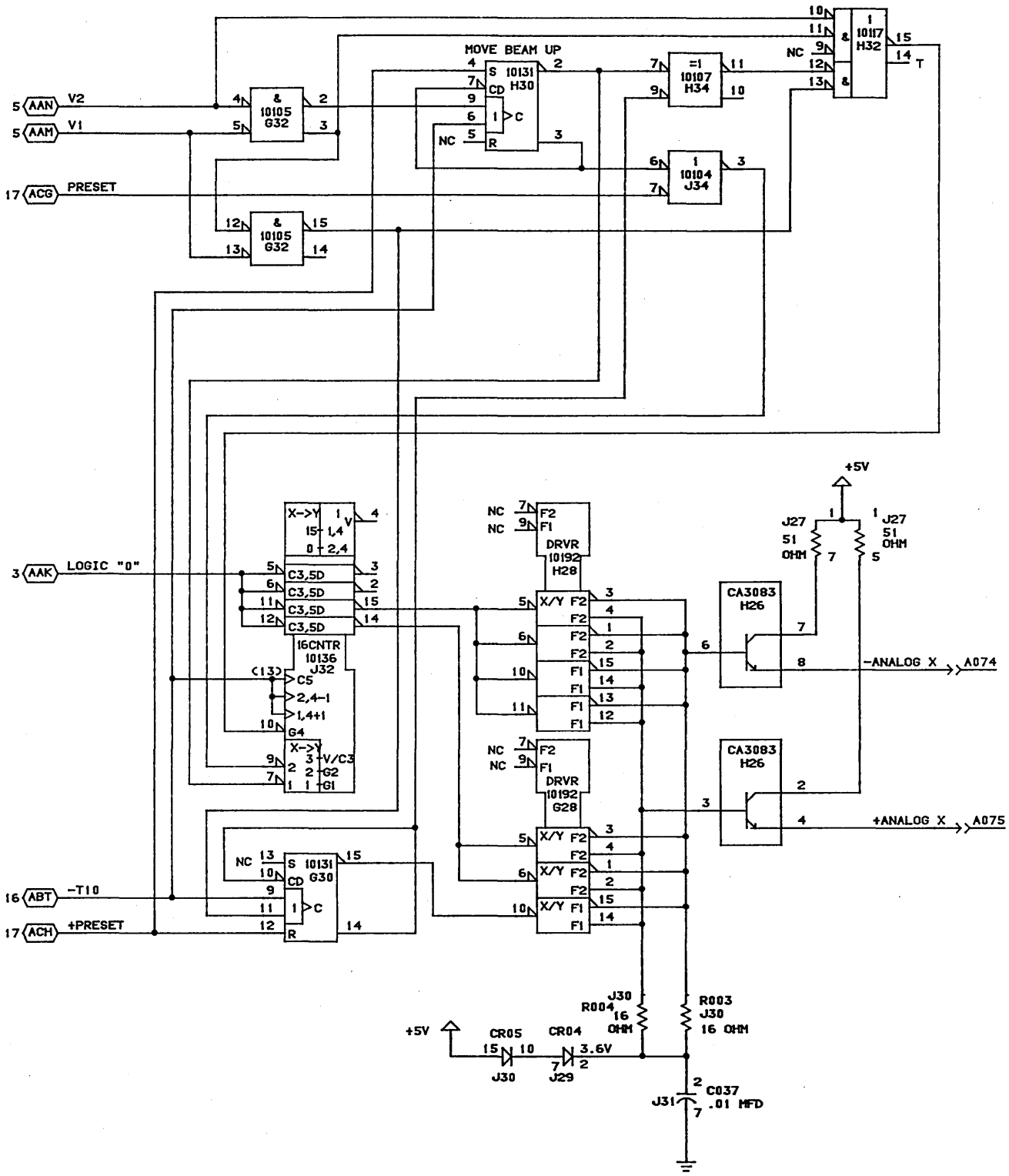

NOTE: THIS DRAWING IS APPLICABLE
TO PWB 19268188 ONLY.

CONTROL DATA CANADA LTD	CHARACTER PAINTER- VERTICAL MOVEMENT GENERATOR	C		D
	210 PAK ASSEMBLY TYPE: 1CQ0	29-MAR-85	SHEET 07A	

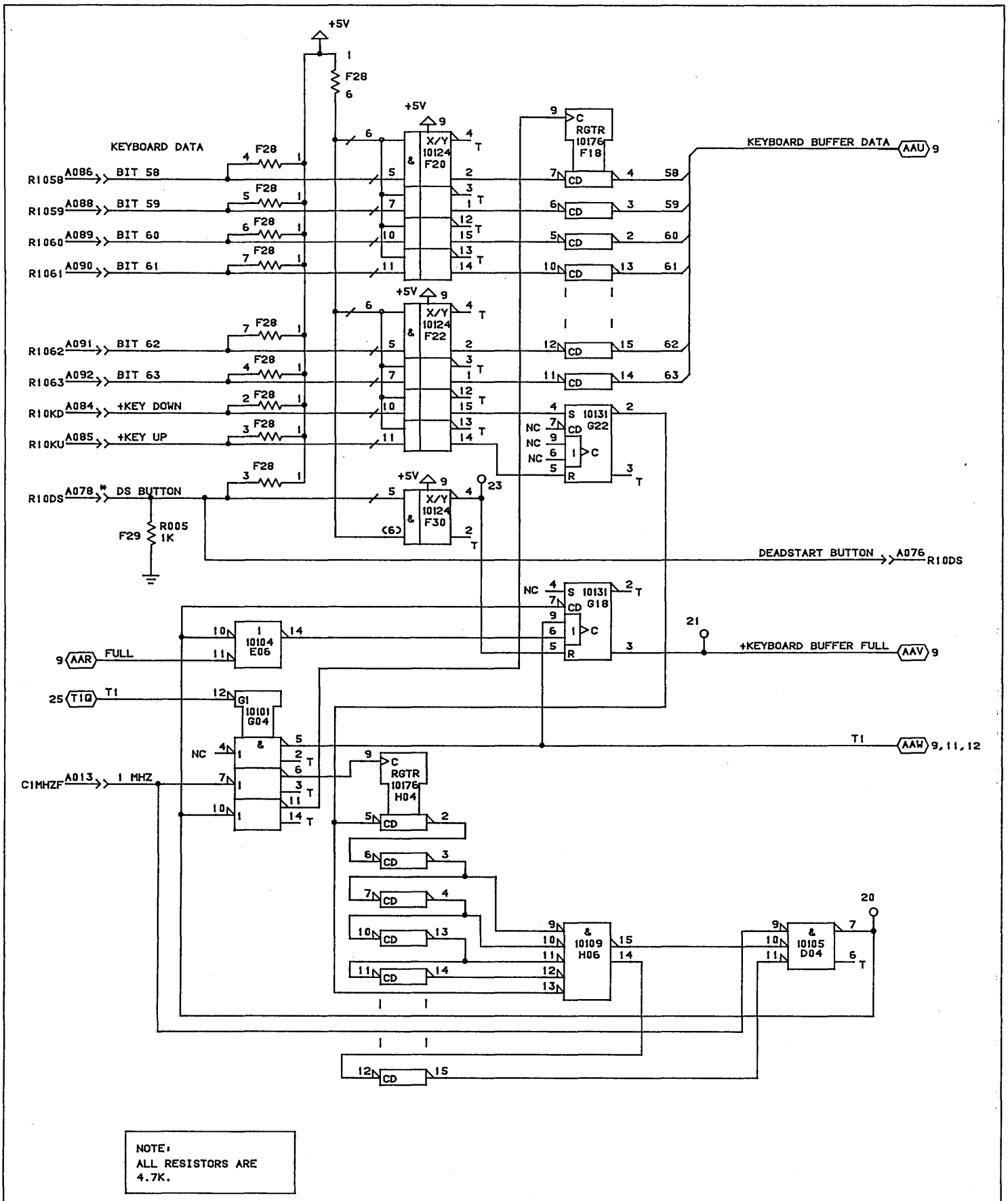

NOTE:
ALL RESISTORS ARE
4.7K.

CONTROL DATA CANADA LTD	KEYBOARD BUFFER 210 PAK MODULE ASSEMBLY TYPE: 1CQ0	C		D
		29-MAR-85	SHEET 08	

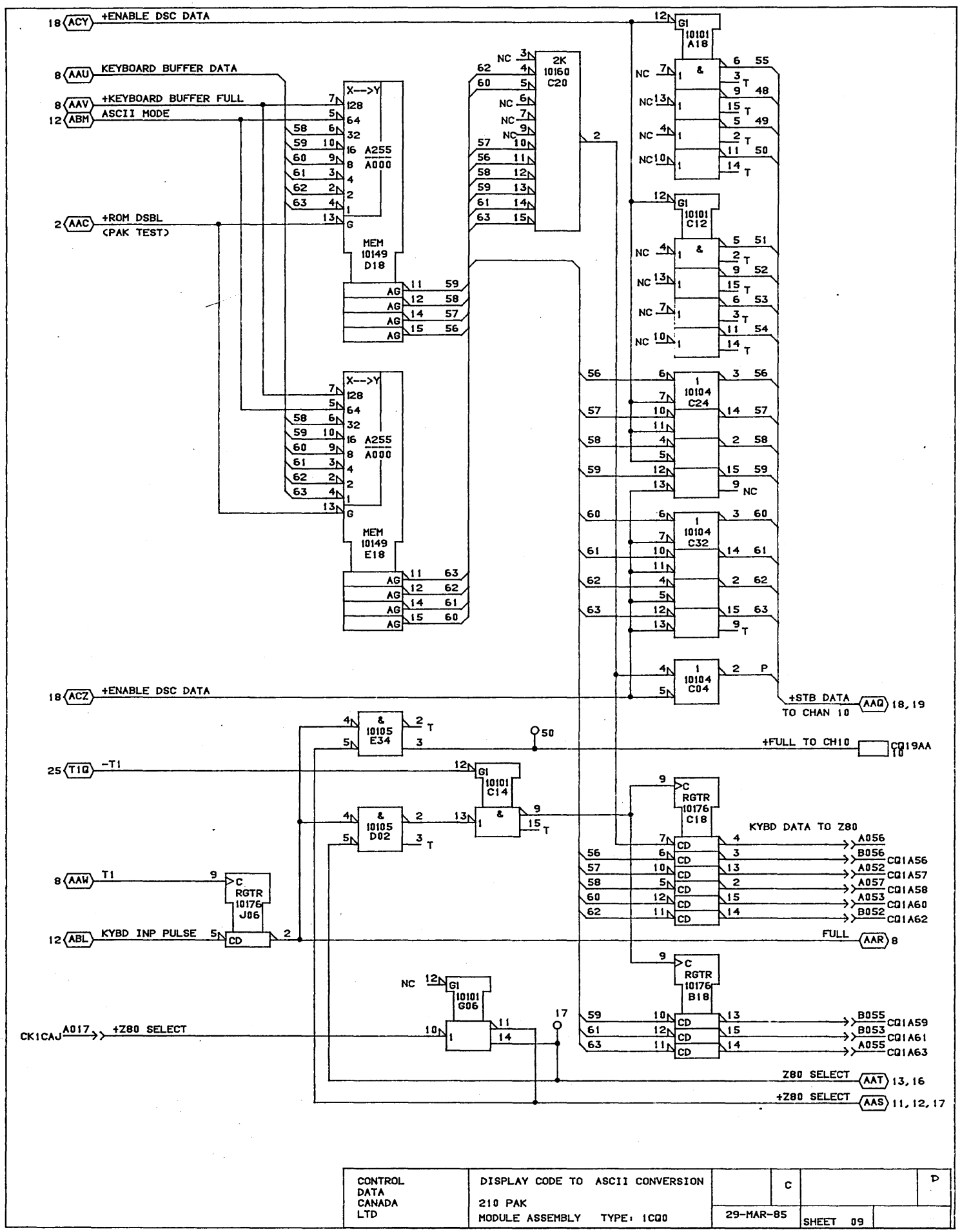

CONTROL DATA CANADA LTD	DISPLAY CODE TO ASCII CONVERSION 210 PAK MODULE ASSEMBLY TYPE: 1CQ0	C		P
		29-MAR-85	SHEET 09	

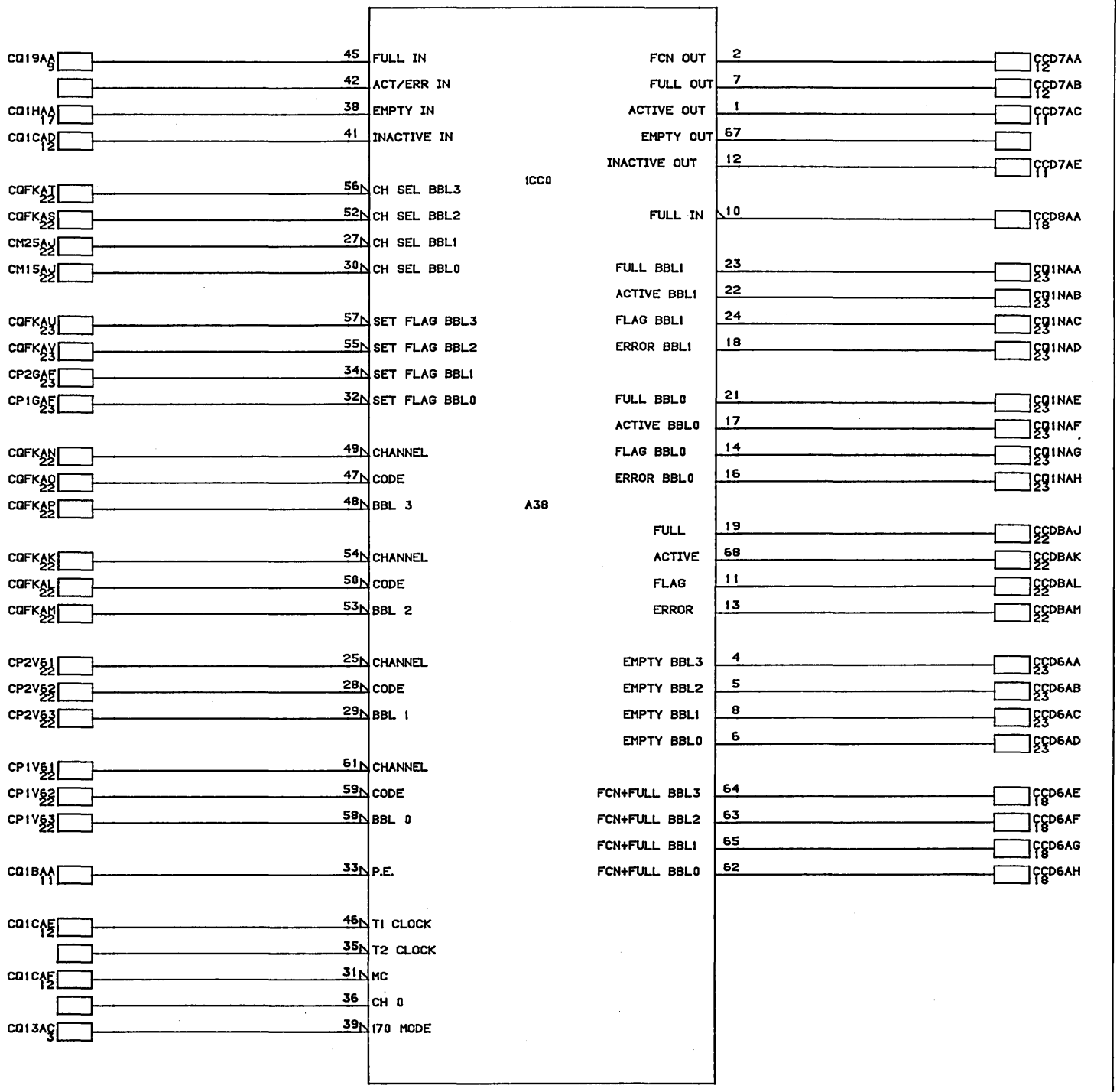

CONTROL DATA CANADA LTD	CH10 CONTROL MACROCELL 210 PAK ASSEMBLY TYPE: 1CQ0		C	D
		29-MAR-85	SHEET 10	

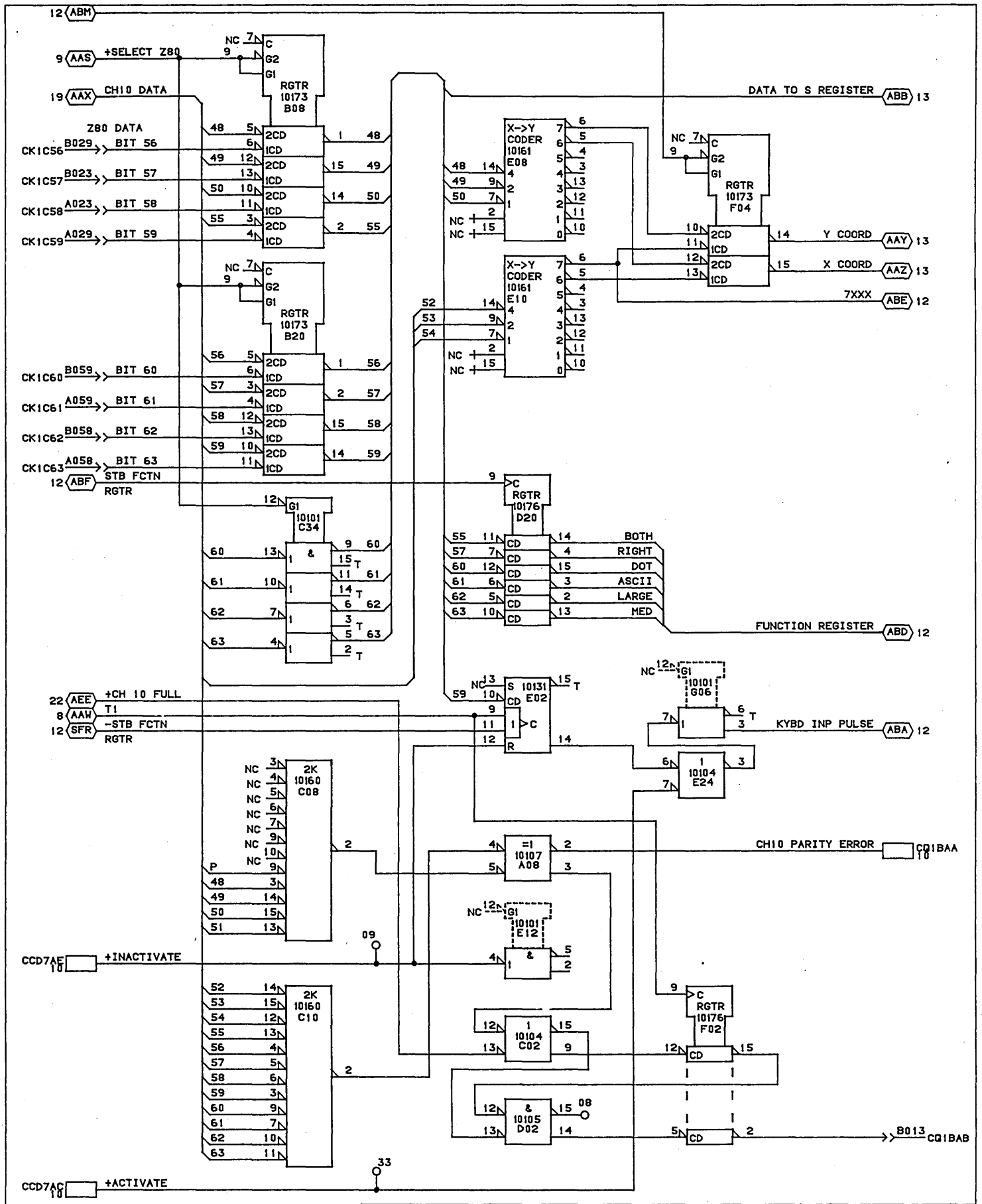

CONTROL DATA CANADA LTD	CH10 PARITY CHECKER DISPLAY CONTROLLER INPUT MUX 210 PAK MODULE ASSEMBLY TYPE: 1CQ0	C		P
		01-APR-85	SHEET 11	

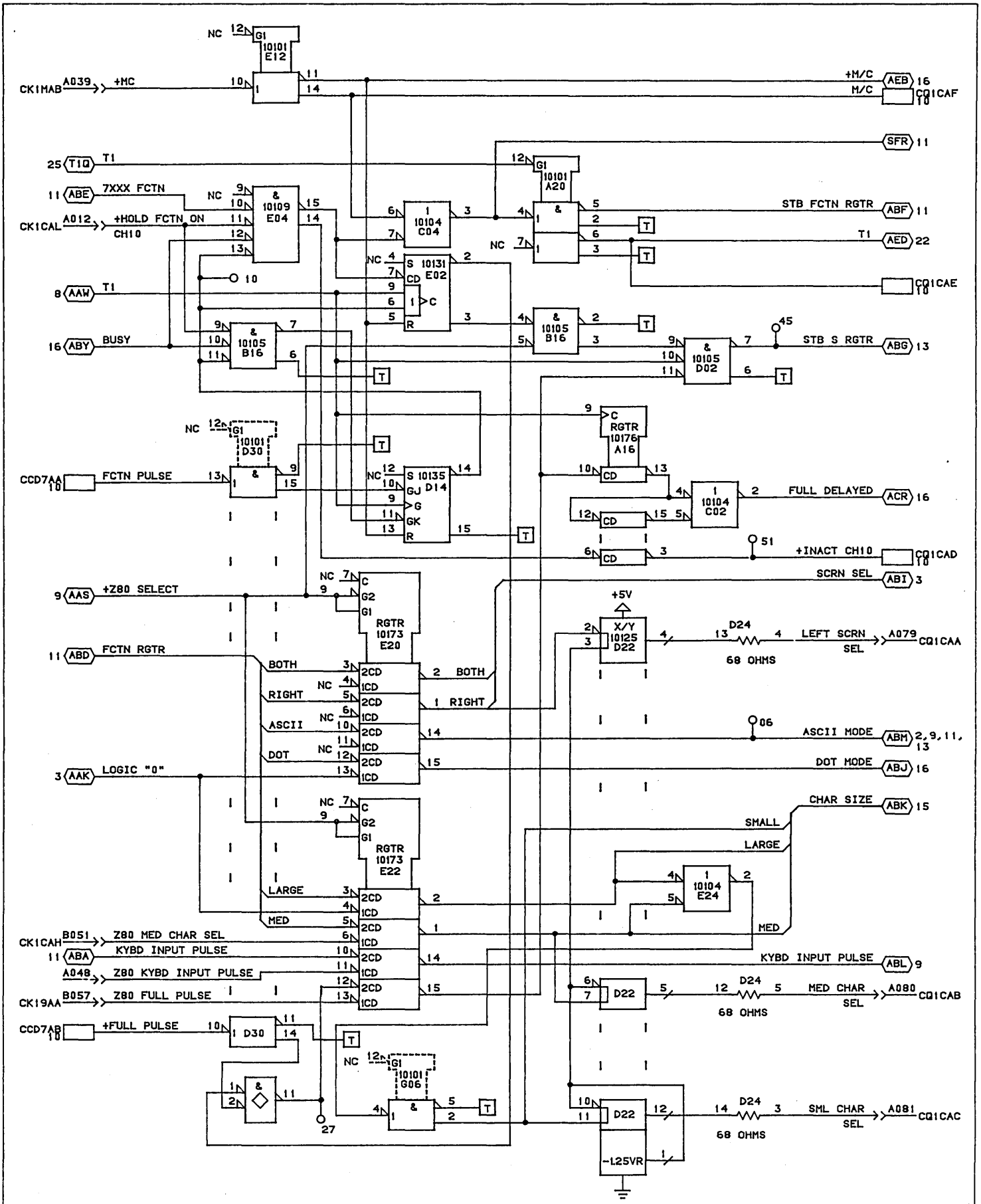

CONTROL DATA CANADA LTD	DISPLAY CONTROLLER FUNCTION MUX 210 PAK MODULE ASSEMBLY TYPE: 1CQ0	C		D
		01-APR-85	SHEET 12	

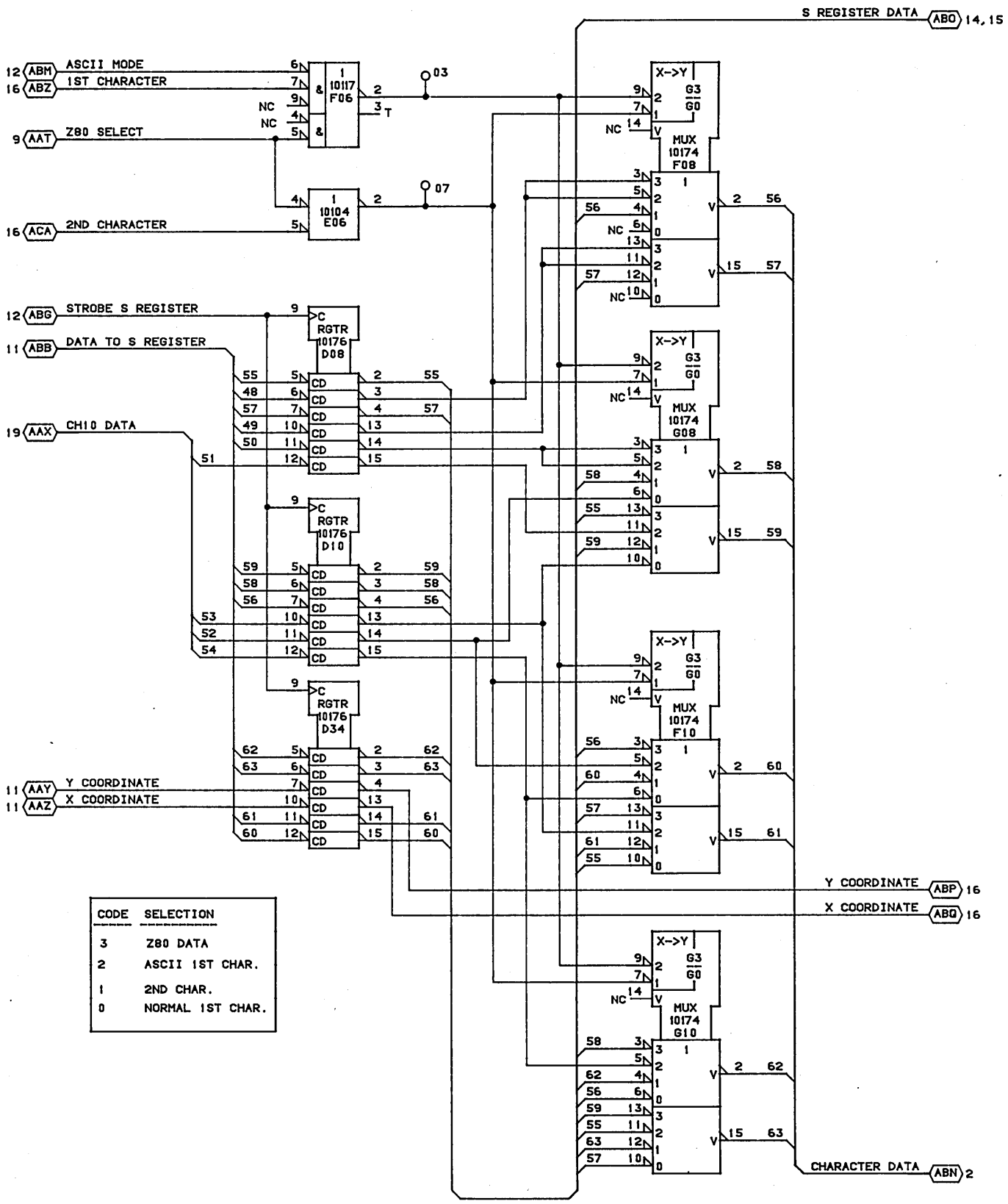

CODE	SELECTION
3	Z80 DATA
2	ASCII 1ST CHAR.
1	2ND CHAR.
0	NORMAL 1ST CHAR.

CONTROL DATA CANADA LTD	S REGISTER AND CHARACTER CODE SELECTION MUX 210 PAK MODULE ASSEMBLY TYPE: 1CQ0	C		D
		01-APR-85	SHEET 13	

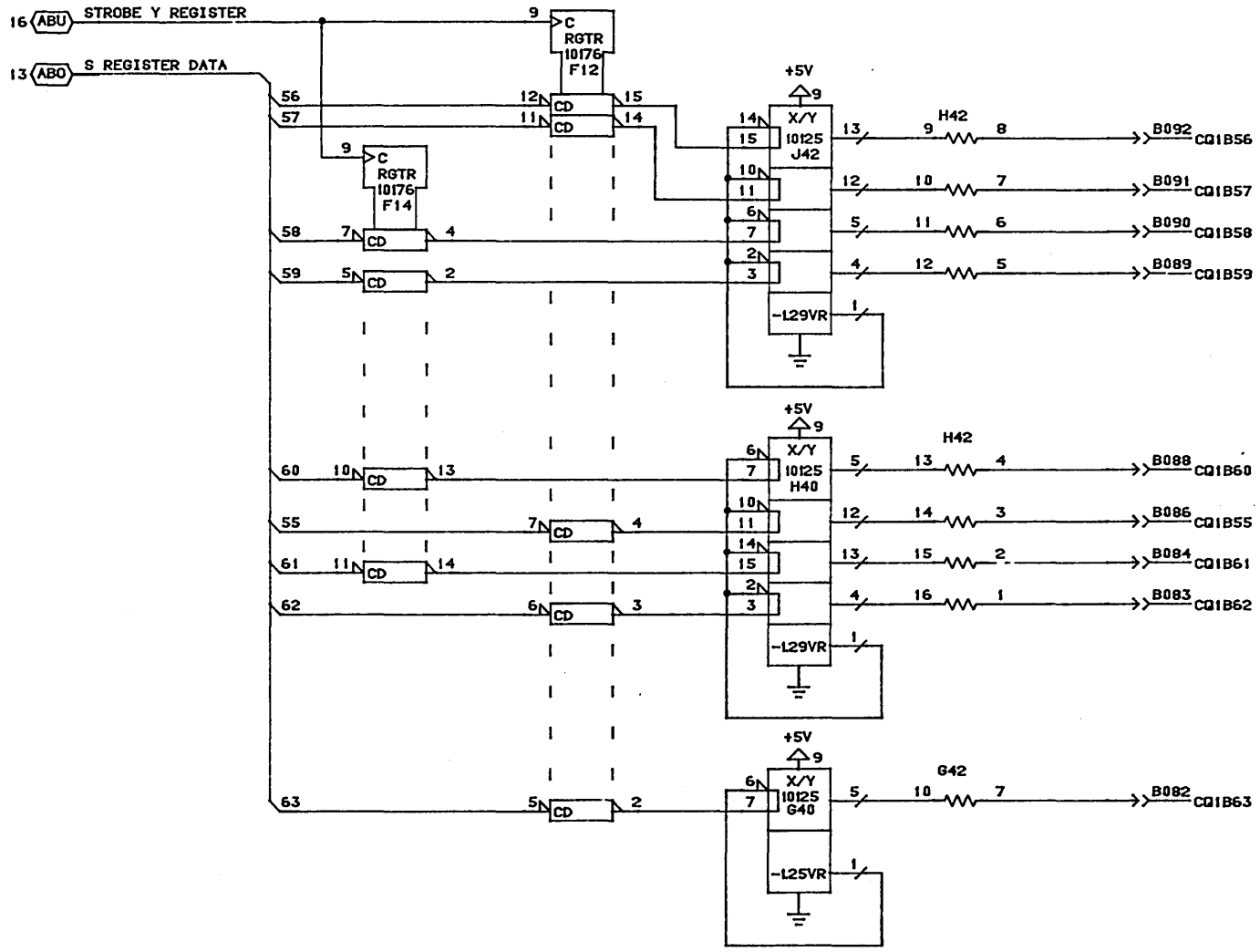

ALL RESISTORS ARE
68 OHMS.

CONTROL DATA CANADA LTD	Y REGISTER 210 PAK MODULE ASSEMBLY TYPE: 1CQ0	C		D
		01-APR-85	SHEET 14	

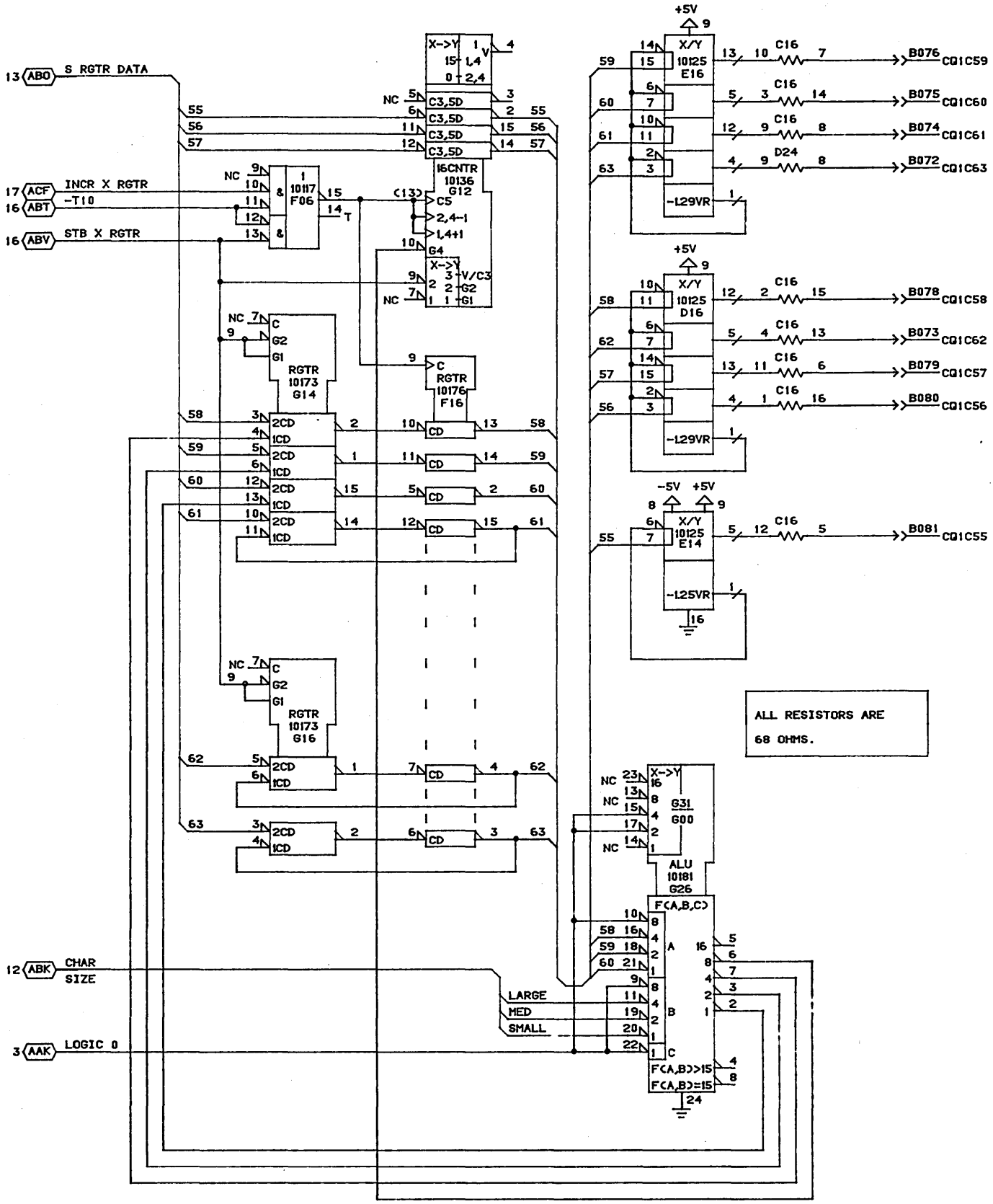

CONTROL DATA CANADA LTD	X REGISTER & INCREMENTER 210 PAK MODULE ASSEMBLY TYPE: 1CQ0	C		D
		01-APR-85	SHEET 15	

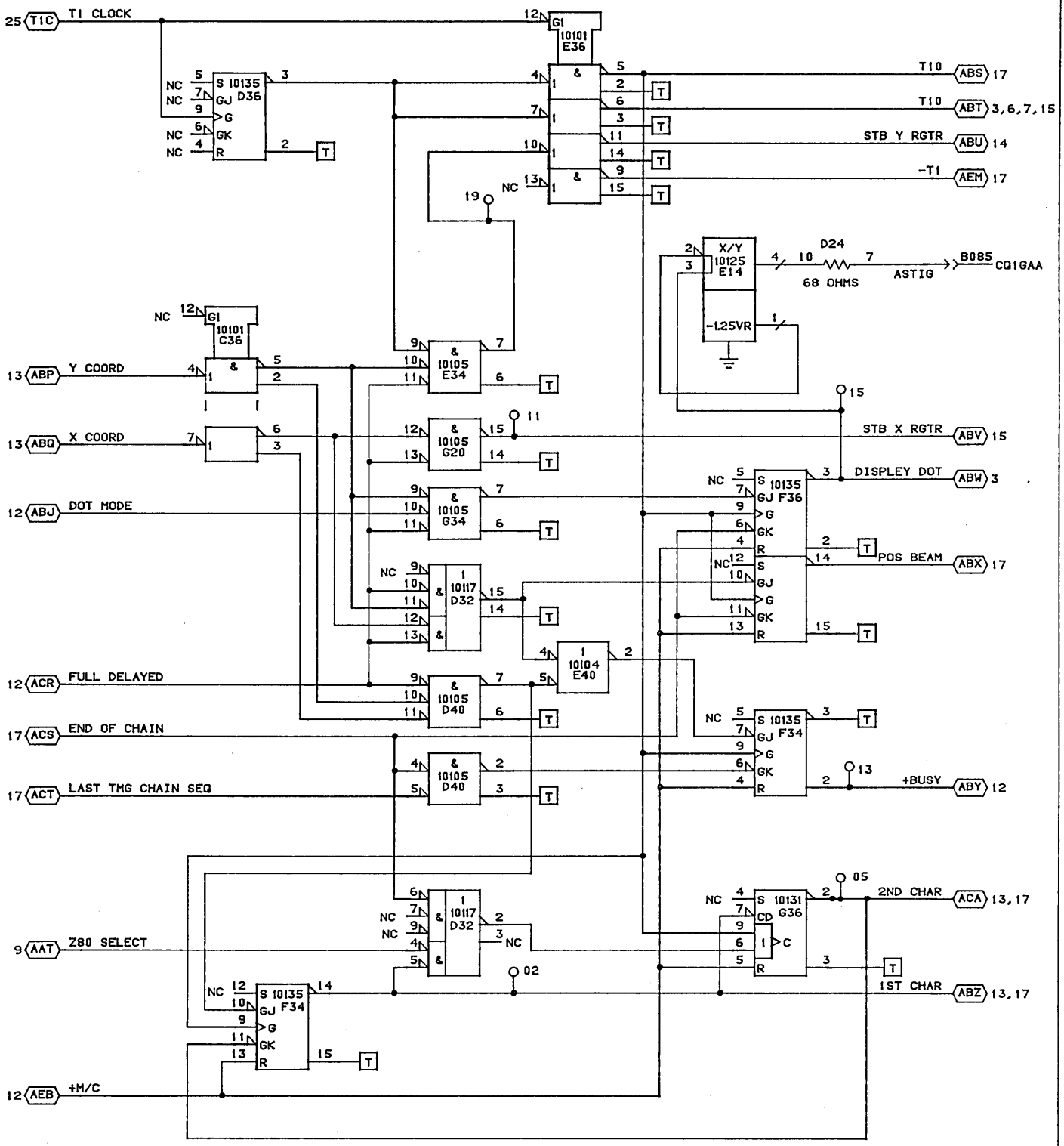

CONTROL DATA CANADA LTD	DISPLAY CONTROLLER STATUS FLIP FLOPS 210 PAK MODULE ASSEMBLY TYPE: 1CQ0		C	D
		02-APR-85	SHEET 16	

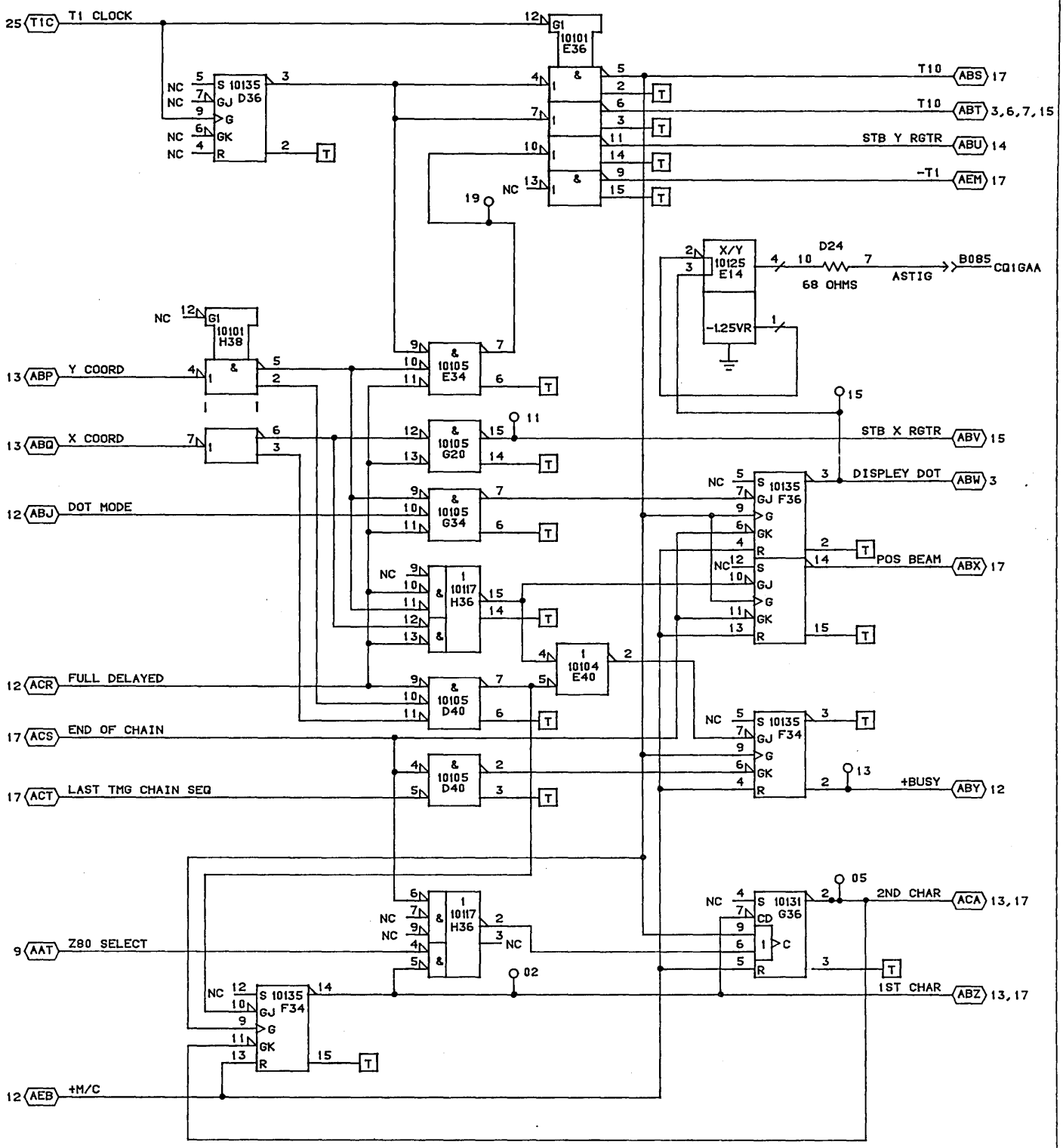

NOTE: THIS DRAWING IS ONLY
APPLICABLE TO PWB 19268188.

CONTROL DATA CANADA LTD	DISPLAY CONTROLLER STATUS FLIP FLOPS 210 PAK MODULE ASSEMBLY TYPE: 1CQ0	C		D
		02-APR-85	SHEET 16A	

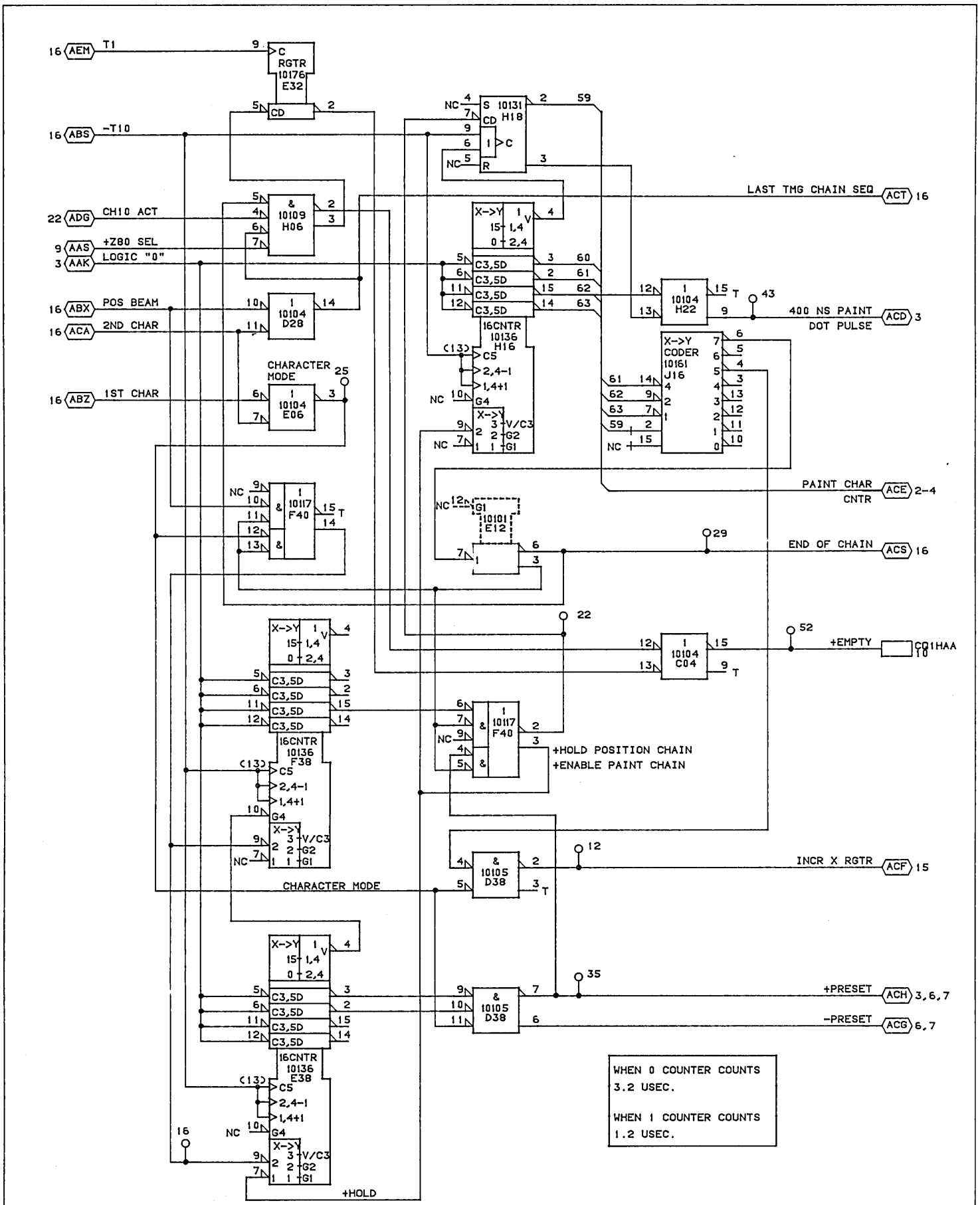

CONTROL DATA CANADA LTD	TIMING CHAIN COUNTERS 210 PAK MODULE ASSEMBLY TYPE: 1CQ0	C	D
		01-APR-85	SHEET 17

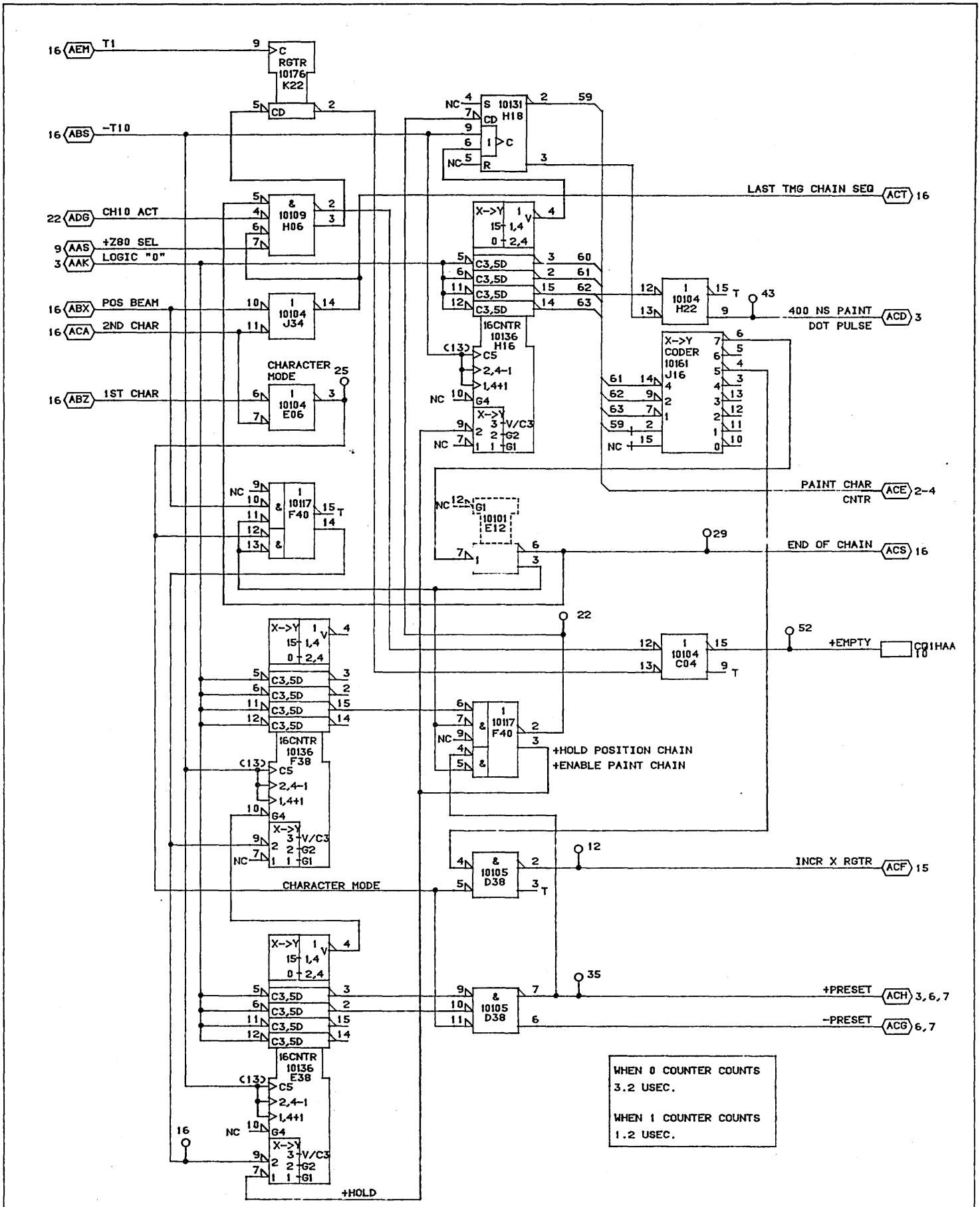

NOTE: THIS DRAWING IS APPLICABLE TO PWB 19268188.

CONTROL DATA CANADA LTD	TIMING CHAIN COUNTERS 210 PAK MODULE ASSEMBLY TYPE: 1CQ0	C		D
		02-APR-85	SHEET 17A	

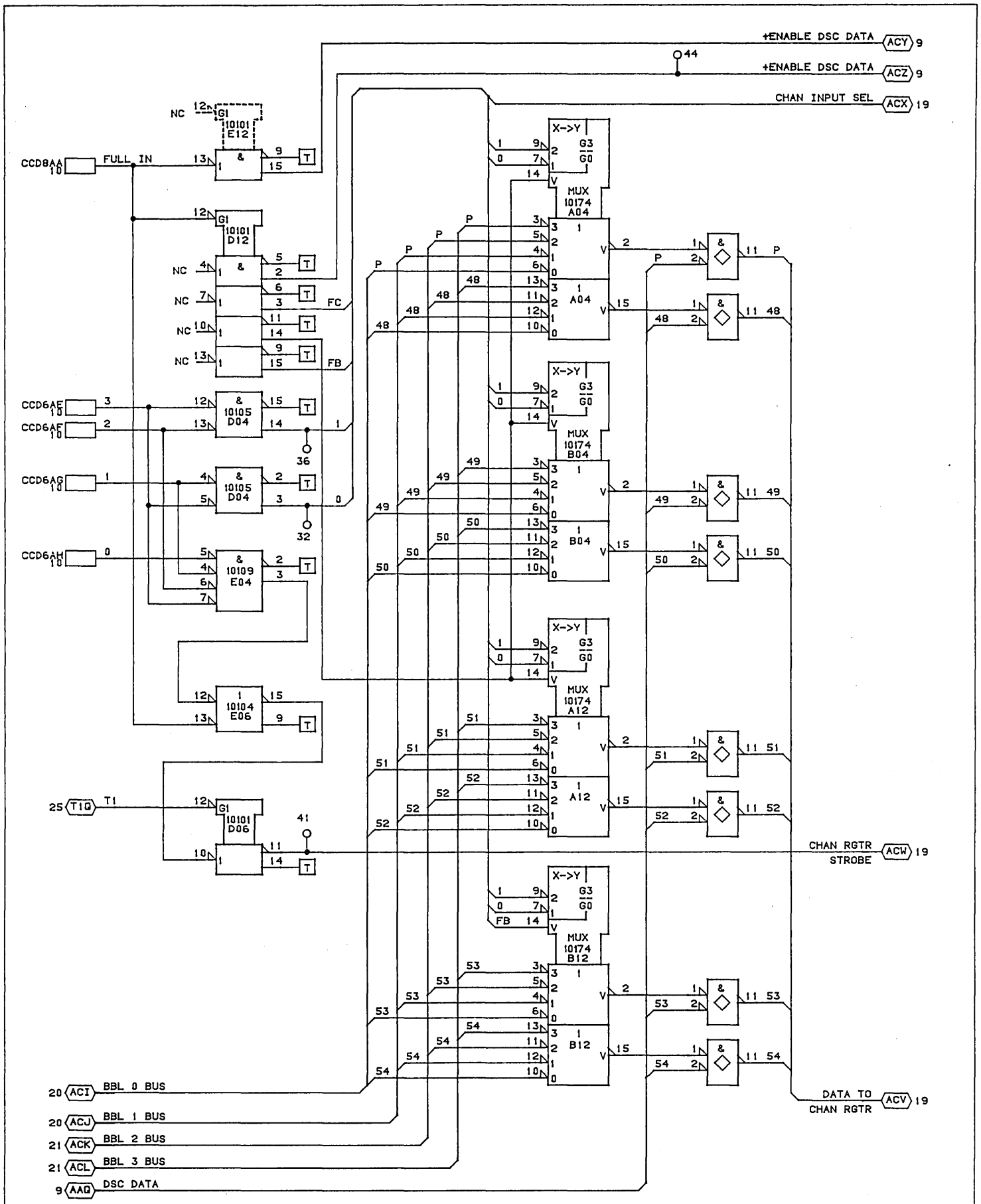

CONTROL DATA CANADA LTD	CHANNEL 10 INPUT MUX AND CONTROLS 210 PAK ASSEMBLY TYPE: 1CQ0	C		D
		01-APR-85	SHEET 18	

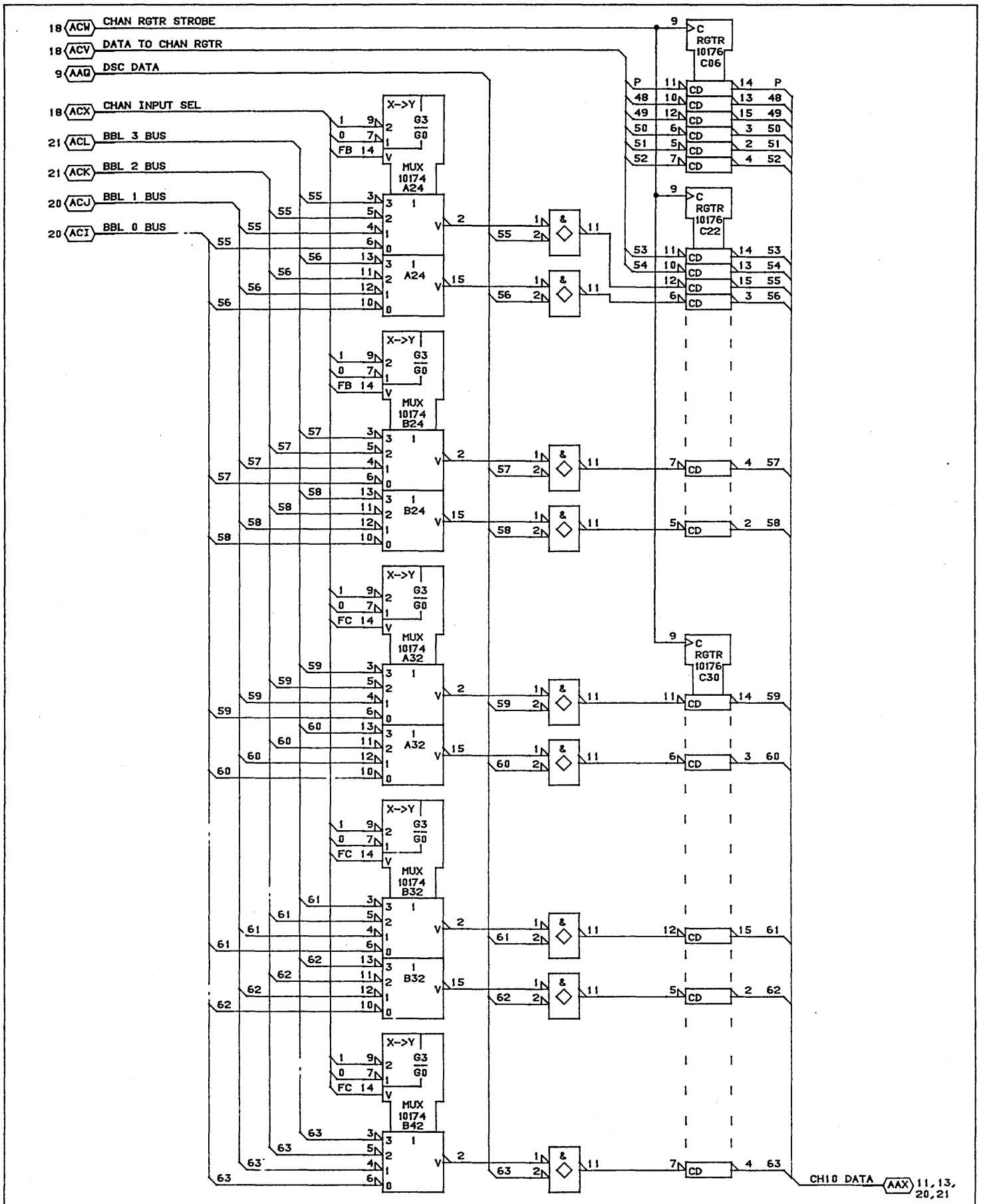

CONTROL DATA CANADA LTD	CHANNEL 10 INPUT MUX AND DATA REGISTER 210 PAK ASSEMBLY TYPE: 1CQ0		C	D
		01-APR-85	SHEET 19	

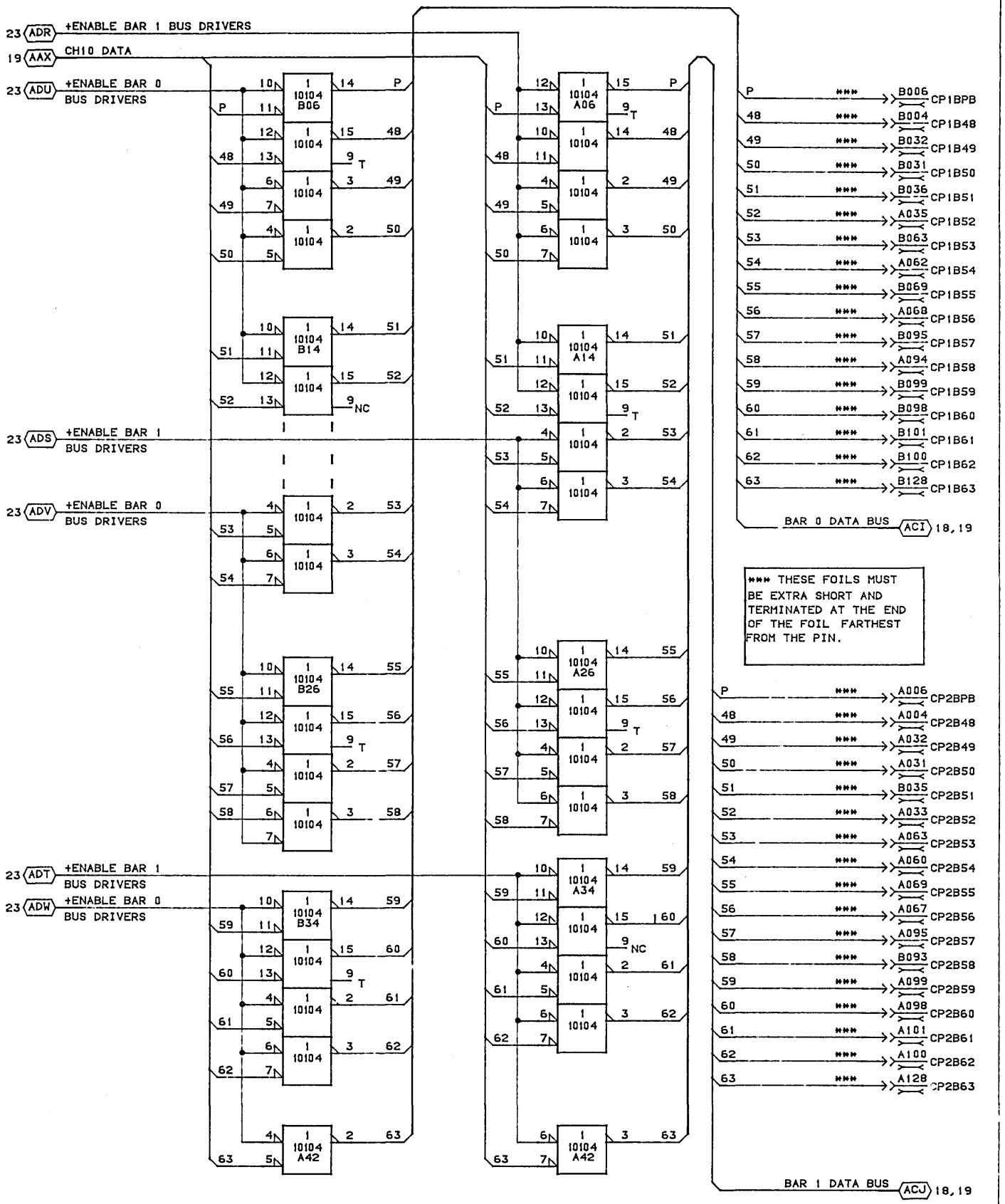

CONTROL DATA CANADA LTD	BARREL 0 & 1 BUS DRIVERS 210 PAK ASSEMBLY TYPE: 1CQ0	C		D
		01-APR-85	SHEET 20	

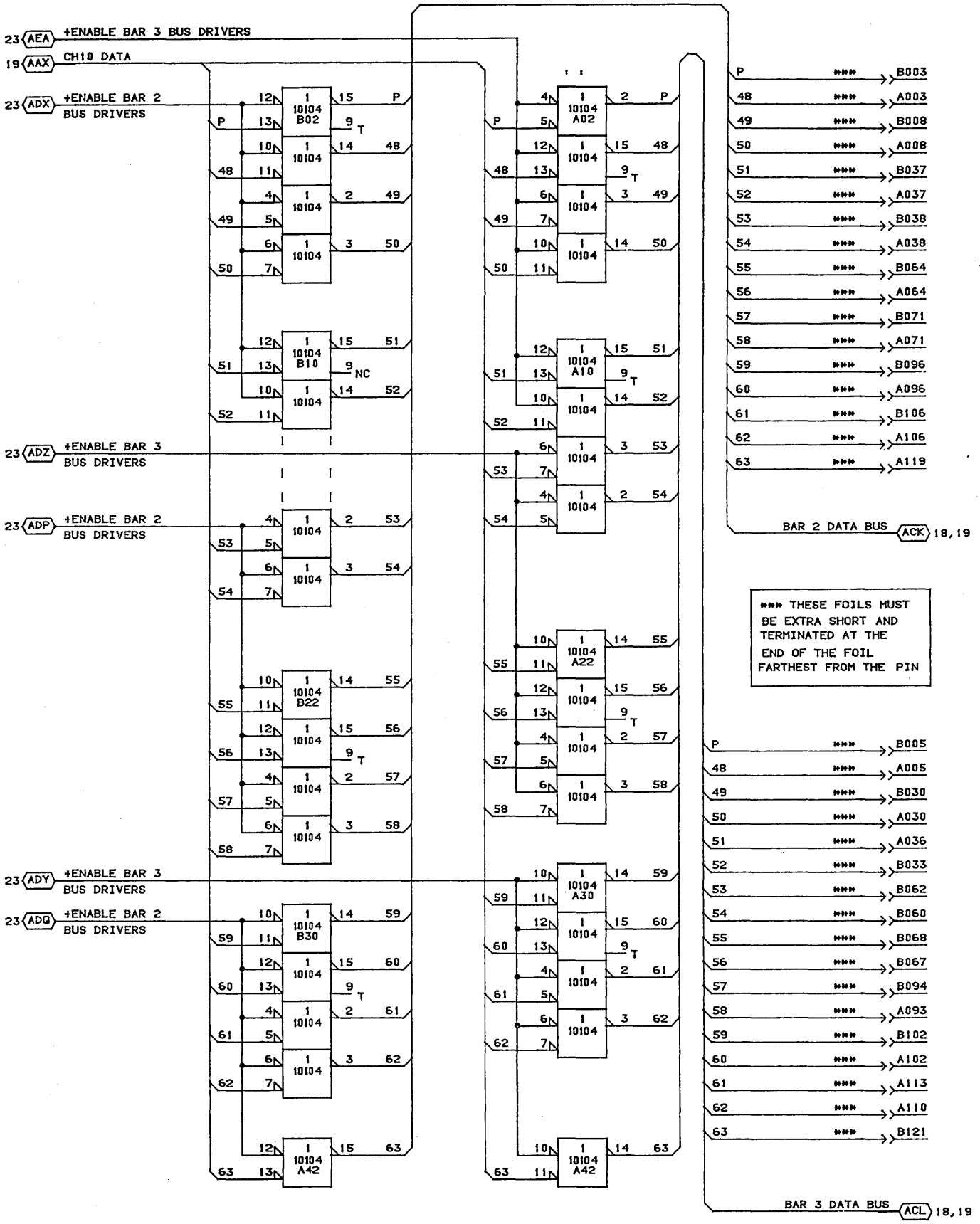

CONTROL DATA CANADA LTD	BARREL 2 &3 BUS DRIVERS 210 PAK ASSEMBLY TYPE: 1CQ0	C		D
		01-APR-85	SHEET 21	

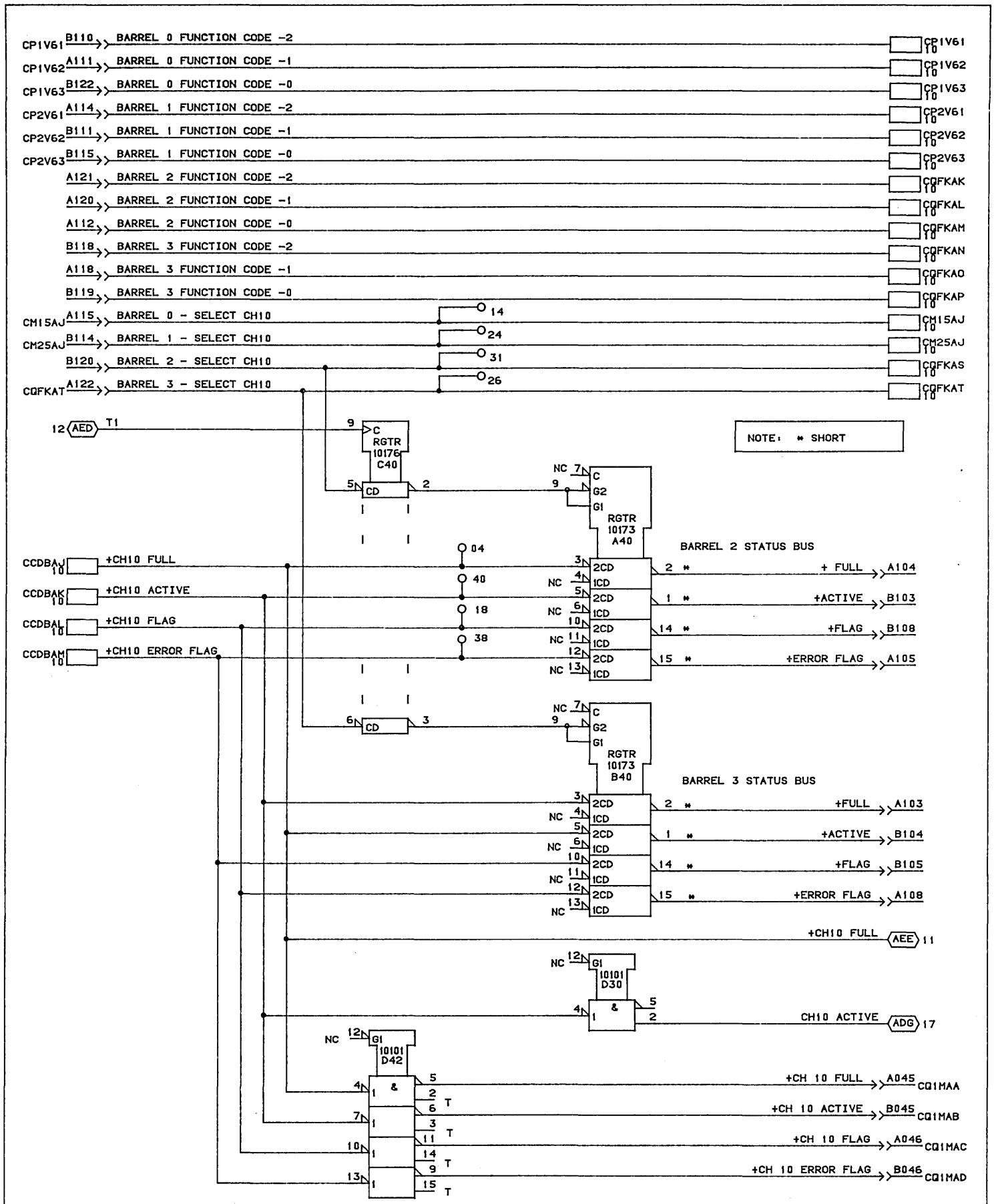

CONTROL DATA CANADA LTD	CHANNEL CONTROLS 210 PAK ASSEMBLY TYPE: 1CQ0		C	D
		02-APR-85	SHEET 22	

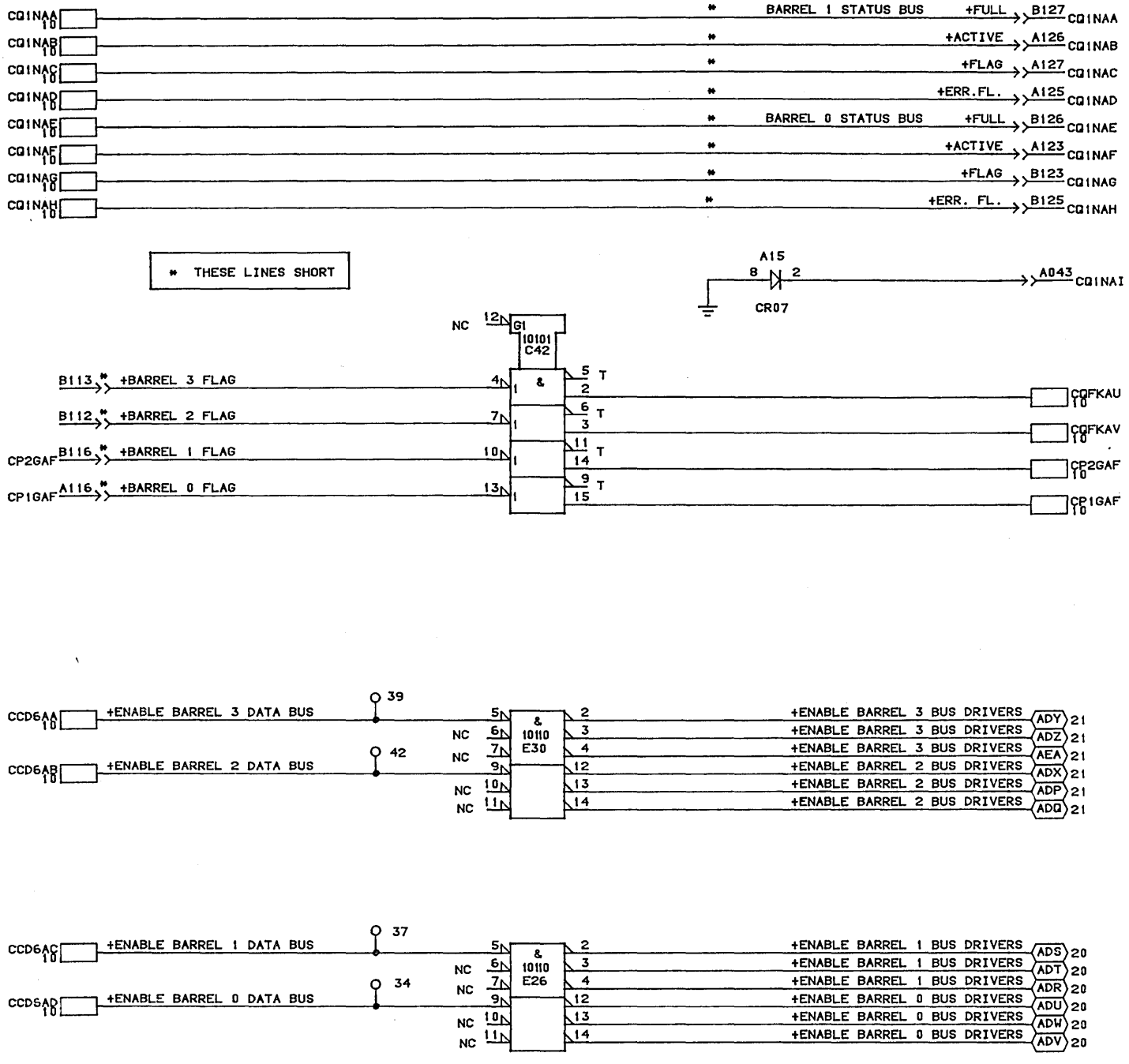

CONTROL DATA CANADA LTD	CHANNEL CONTROLS 210 PAK ASSEMBLY TYPE: 1CQ0	C		D
		02-APR-85	SHEET 23	

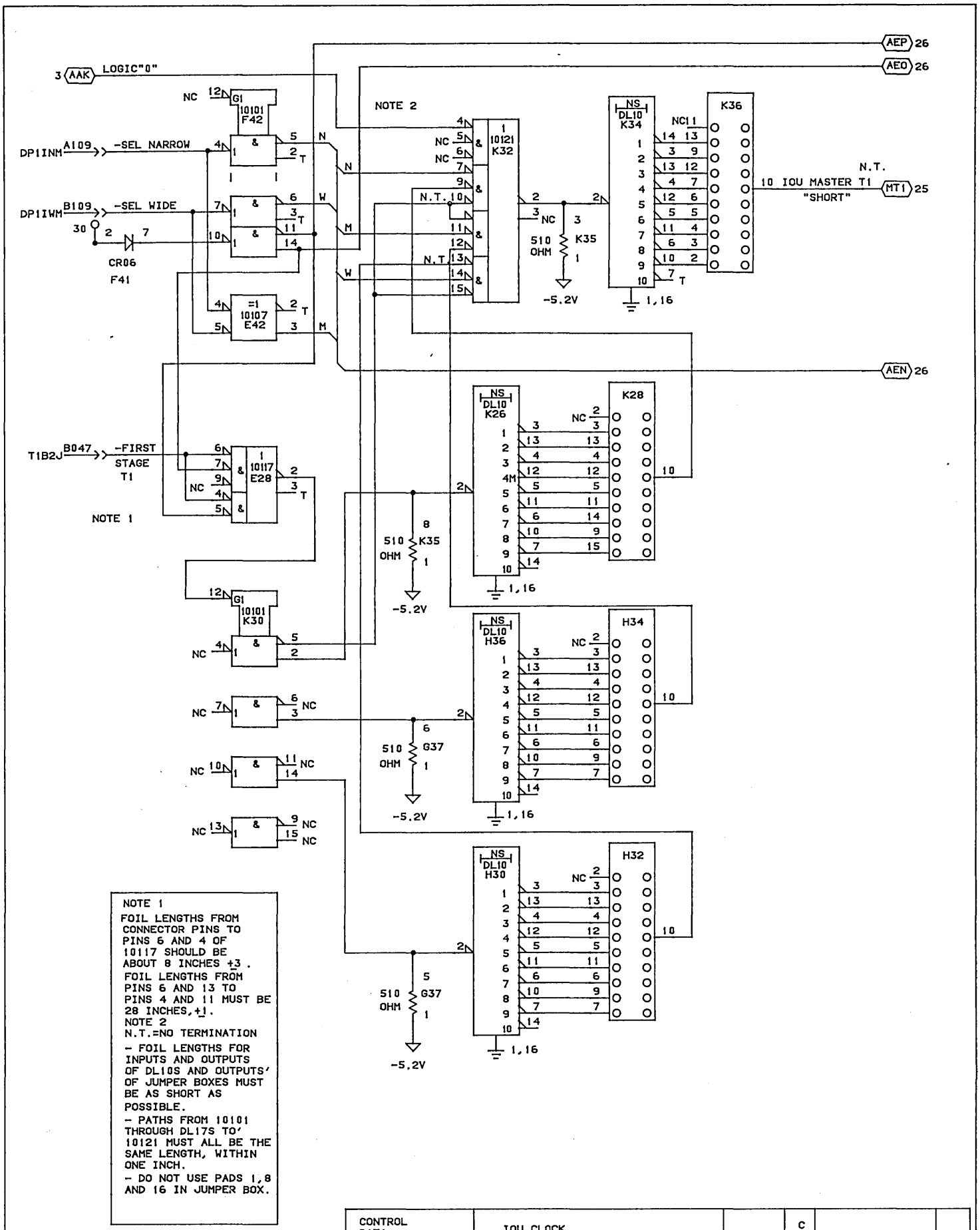

NOTE 1
FOIL LENGTHS FROM CONNECTOR PINS TO PINS 6 AND 4 OF 10117 SHOULD BE ABOUT 8 INCHES ±3 .
FOIL LENGTHS FROM PINS 6 AND 13 TO PINS 4 AND 11 MUST BE 28 INCHES, ±1 .
NOTE 2
N.T.=NO TERMINATION
- FOIL LENGTHS FOR INPUTS AND OUTPUTS OF DL10S AND OUTPUTS OF JUMPER BOXES MUST BE AS SHORT AS POSSIBLE.
- PATHS FROM 10101 THROUGH DL17S TO 10121 MUST ALL BE THE SAME LENGTH, WITHIN ONE INCH.
- DO NOT USE PADS 1,8 AND 16 IN JUMPER BOX.

CONTROL DATA CANADA LTD	IOU CLOCK TUNING TYPE: 1CQ0		C	F
		12-JUN-86	SHEET 24	

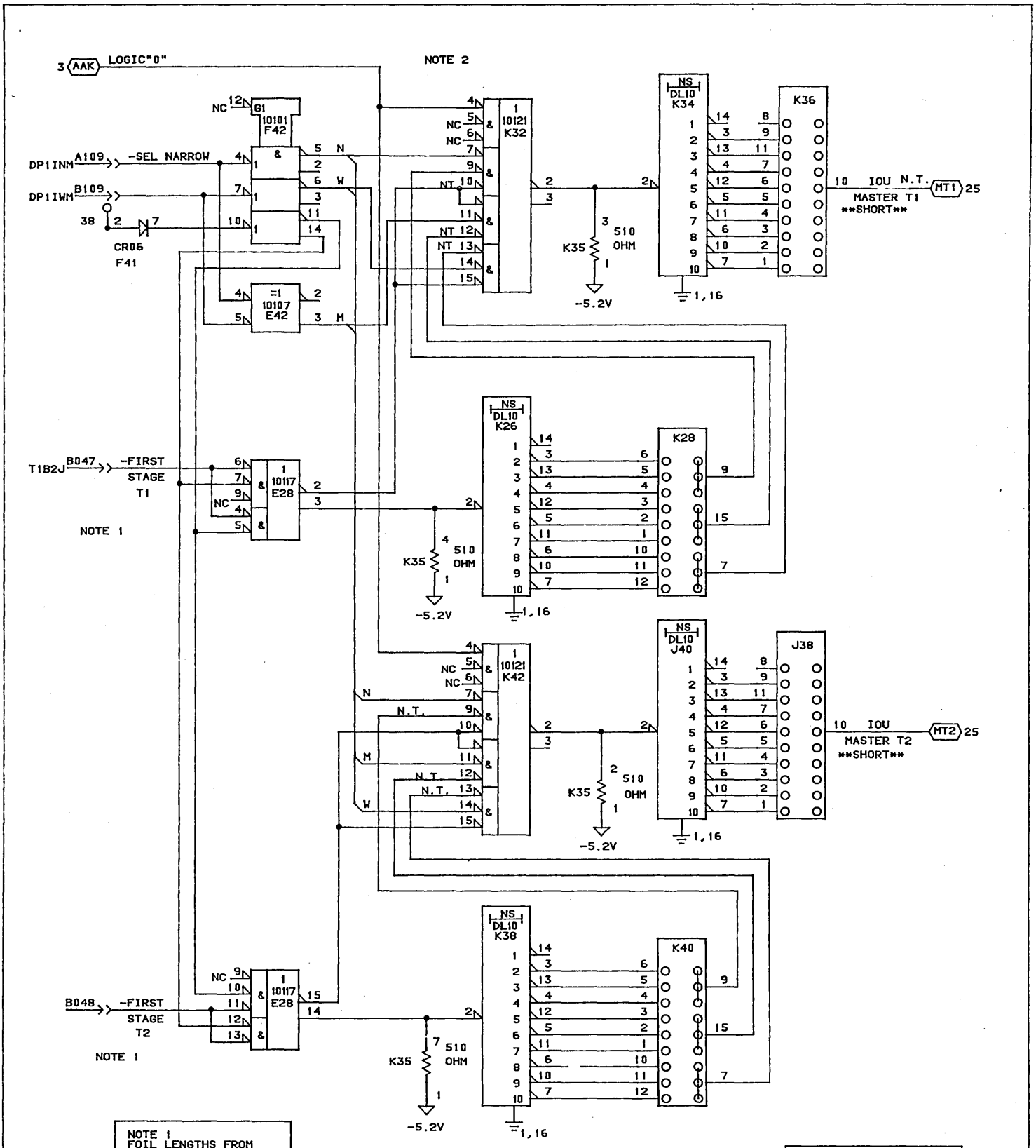

NOTE 1
FOIL LENGTHS FROM CONNECTOR PINS TO PINS 6 AND 13 OF 10117 SHOULD BE ABOUT 8 INCHES +3
FOIL LENGTHS FROM PINS 6 AND 13 TO PINS 4 AND 11 MUST BE 28 INCHES +1
NOTE 2
N.T. = NO TERMINATION

NOTE: THIS DRAWING IS APPLICABLE ONLY TO PWB 19268188.

CONTROL DATA CANADA LTD	IOU CLOCK TUNING TYPE 1CQO	C		D
		29-MAR-85	SHEET 24A	

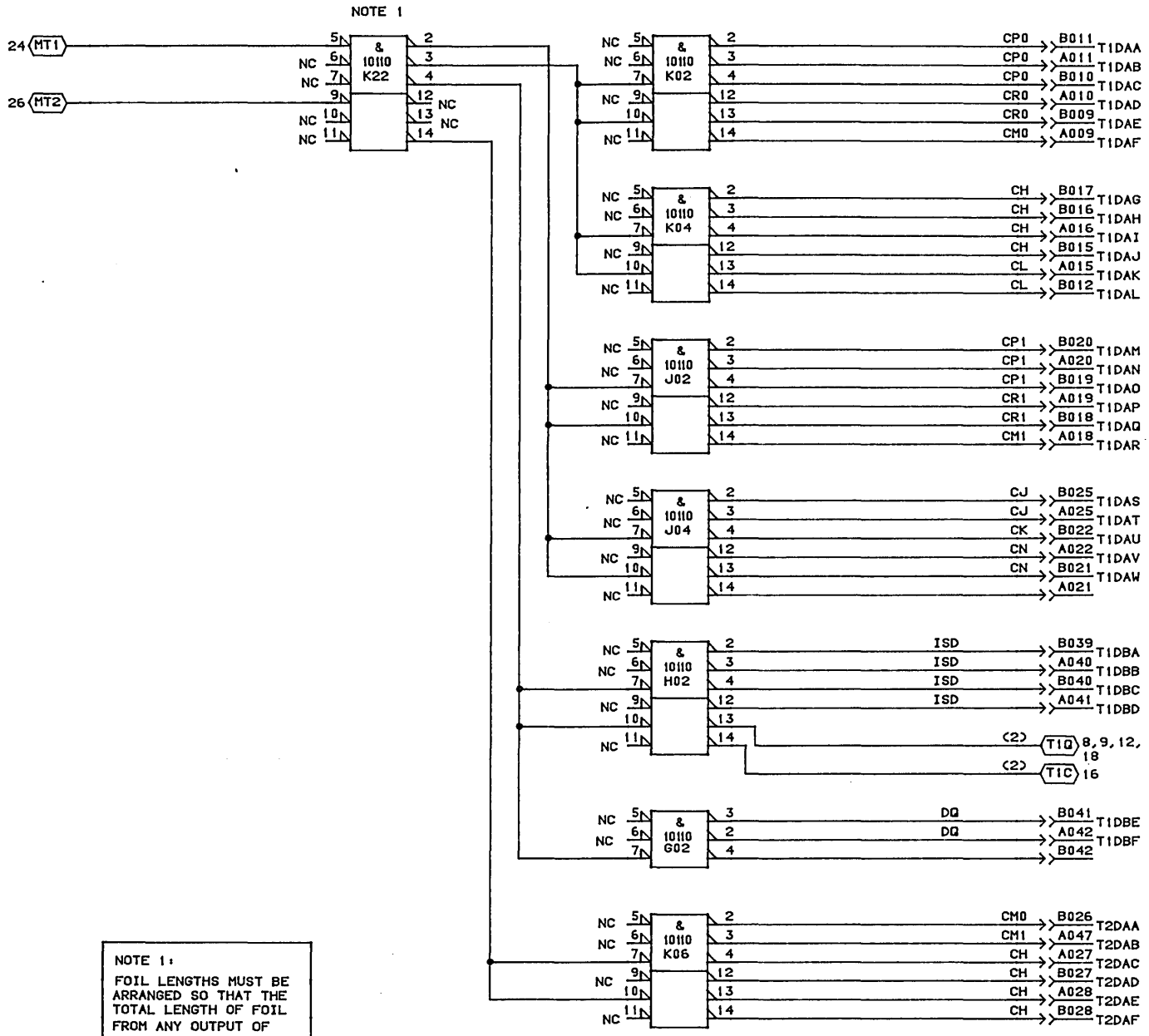

CONTROL DATA CANADA LTD	IOU CLOCKS 2ND STAGE FAN OUT TYPE: 1CQ0	C		D
		02-APR-85	SHEET 25	

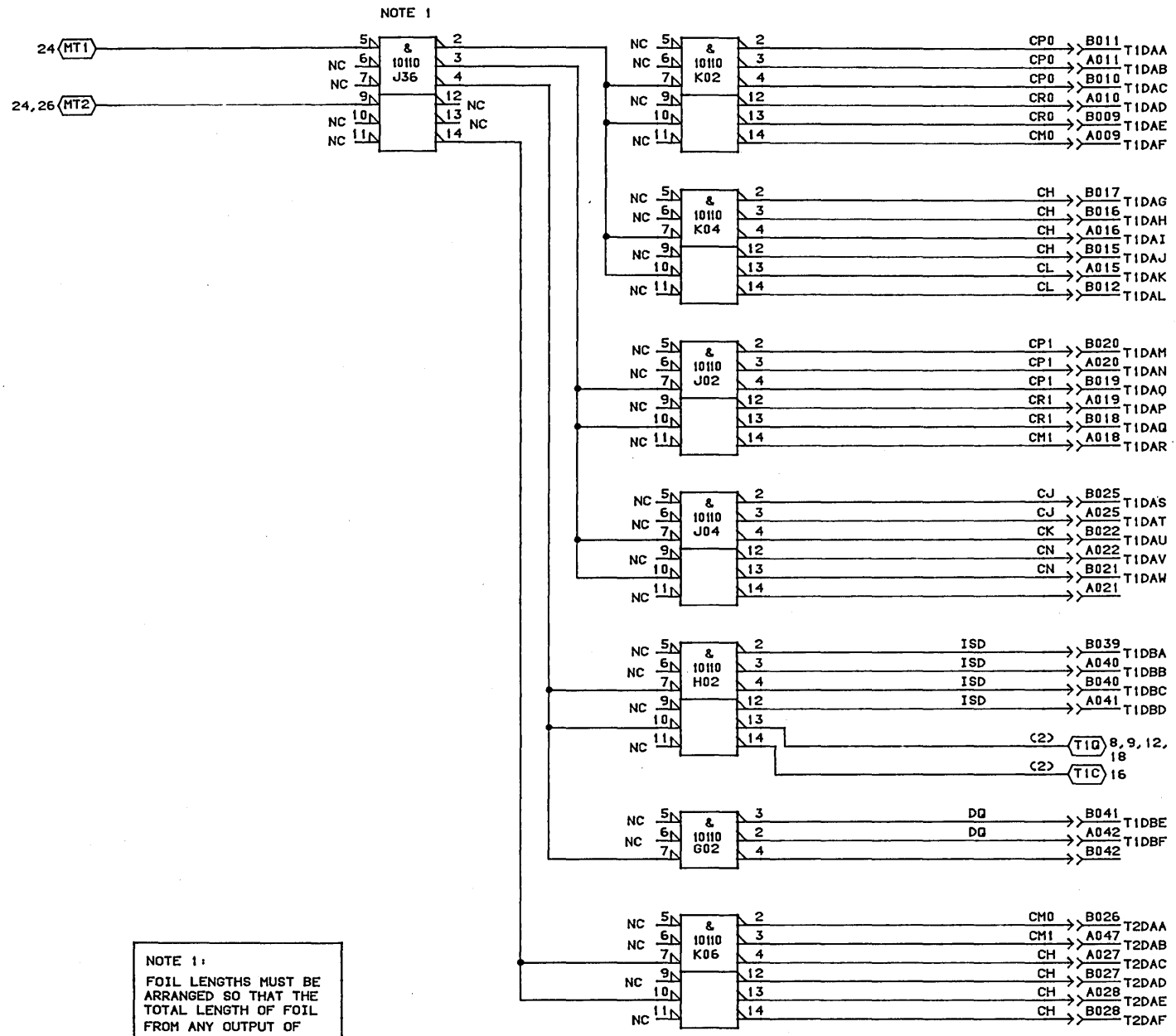

NOTE 1:
FOIL LENGTHS MUST BE ARRANGED SO THAT THE TOTAL LENGTH OF FOIL FROM ANY OUTPUT OF THIS 10110 TO ANY SECTION OF ANOTHER 10110 PLUS THE LENGTH FROM AN OUTPUT OF THAT SECTION TO A CONNECTOR PIN MUST BE THE SAME (WITHIN 1 INCH) FOR ALL PATHS.

NOTE 2:
FOIL LENGTHS MUST BE THE LENGTH OF THE OTHER CLOCK LINES PLUS 20 INCHES.

NOTE: THIS DRAWING IS APPLICABLE TO PWB 19268188.

CONTROL DATA CANADA LTD	IOU CLOCKS 2ND STAGE FAN OUT TYPE: 1CQ0	C		D
		02-APR-85	SHEET 25A	

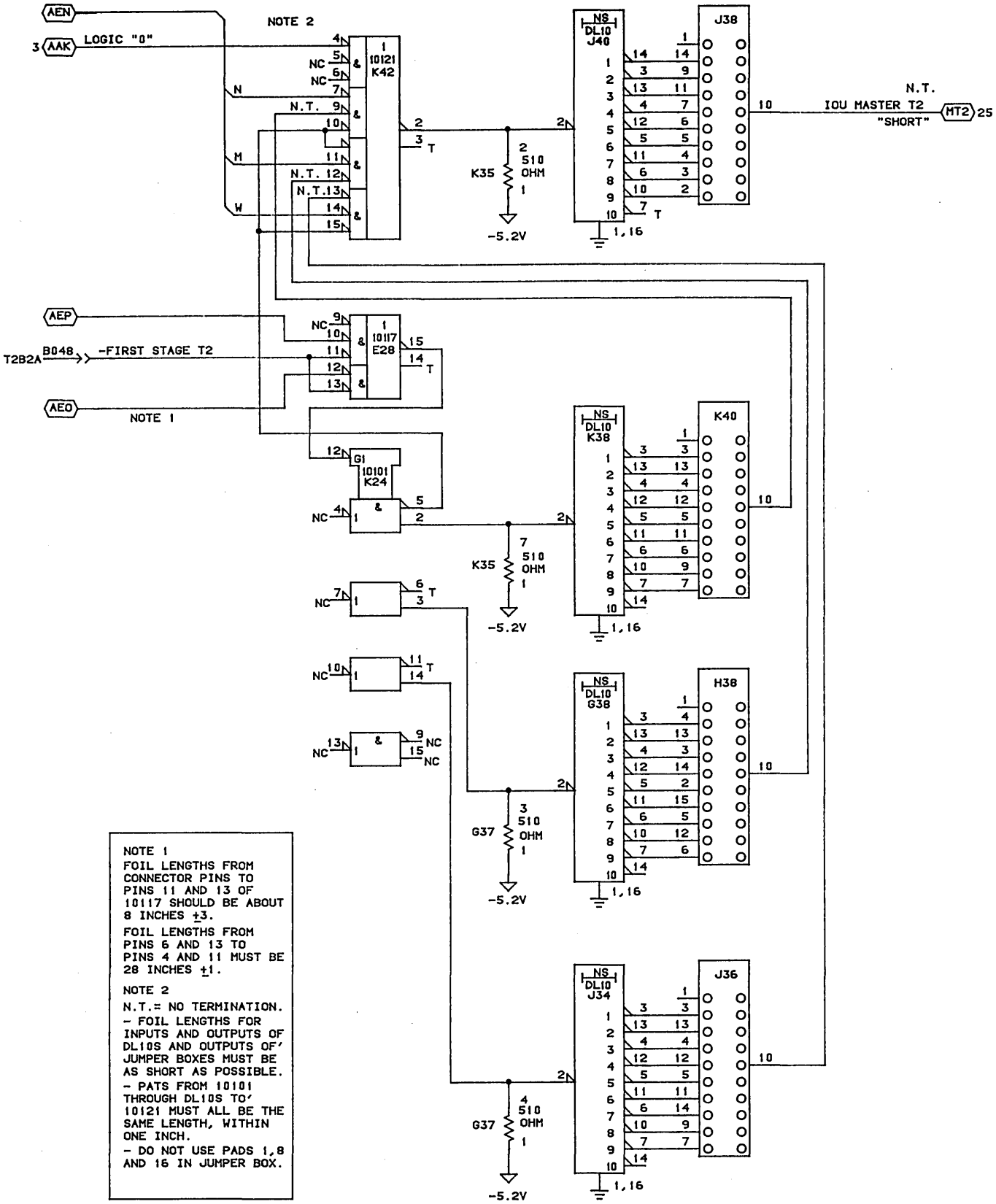

NOTE 1
FOIL LENGTHS FROM CONNECTOR PINS TO PINS 11 AND 13 OF 10117 SHOULD BE ABOUT 8 INCHES ±3.
FOIL LENGTHS FROM PINS 6 AND 13 TO PINS 4 AND 11 MUST BE 28 INCHES ±1.

NOTE 2
N.T.= NO TERMINATION.
- FOIL LENGTHS FOR INPUTS AND OUTPUTS OF DL10S AND OUTPUTS OF JUMPER BOXES MUST BE AS SHORT AS POSSIBLE.
- PATS FROM 10101 THROUGH DL10S TO 10121 MUST ALL BE THE SAME LENGTH, WITHIN ONE INCH.
- DO NOT USE PADS 1,8 AND 16 IN JUMPER BOX.

NOTE: THIS DRAWING IS APPLICABLE ONLY TO PWB 19268888

CONTROL DATA CANADA LTD	IOU CLOCK TUNING TYPE: 1C00	C		D
		02-APR-85	SHEET 26	

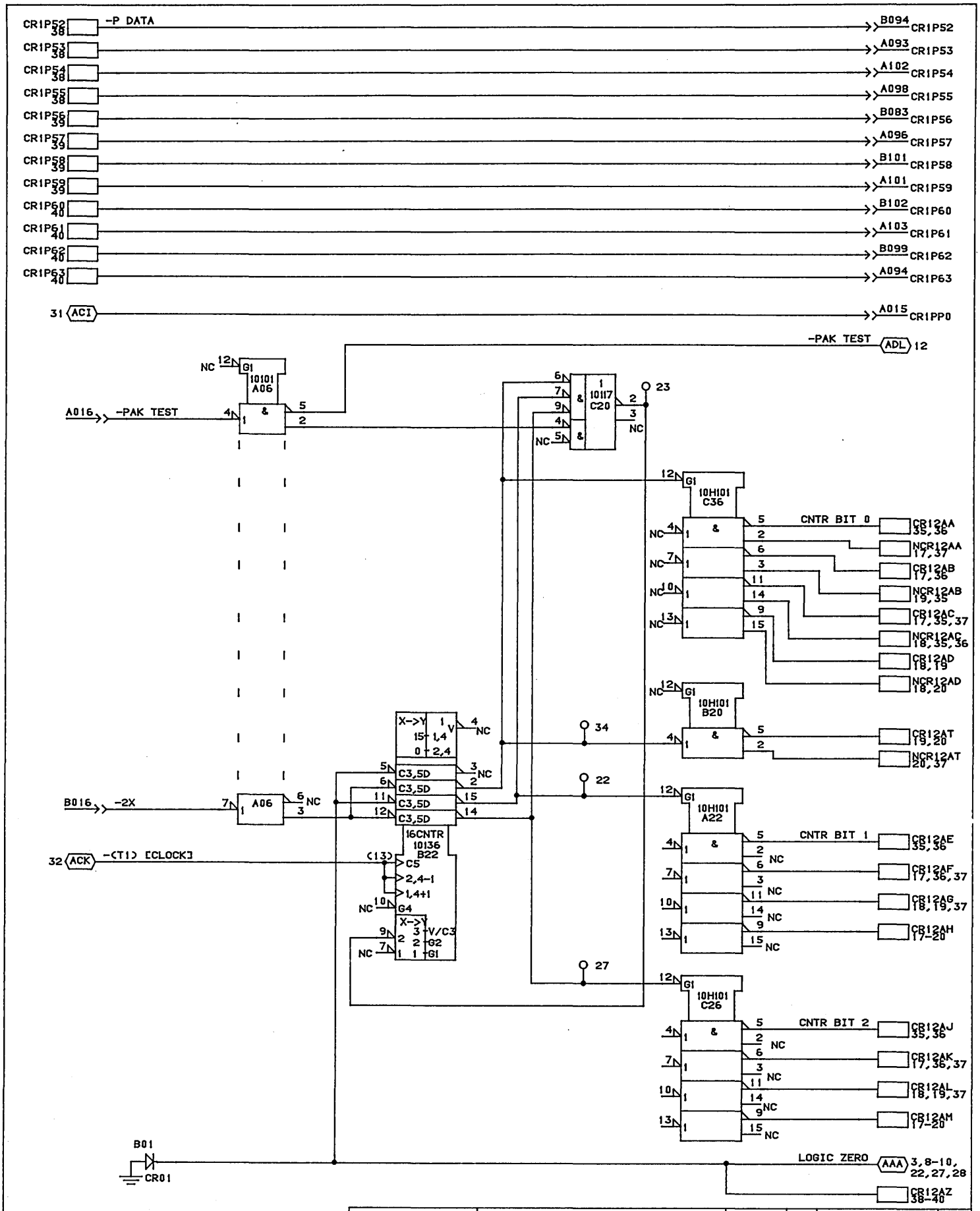

CONTROL DATA CANADA LTD	BARREL COUNTER MODULE ASSEMBLY - 210 PAK TYPE: 1CR0	C		A
		09-NOV-84	SHEET 02	LOC. D12

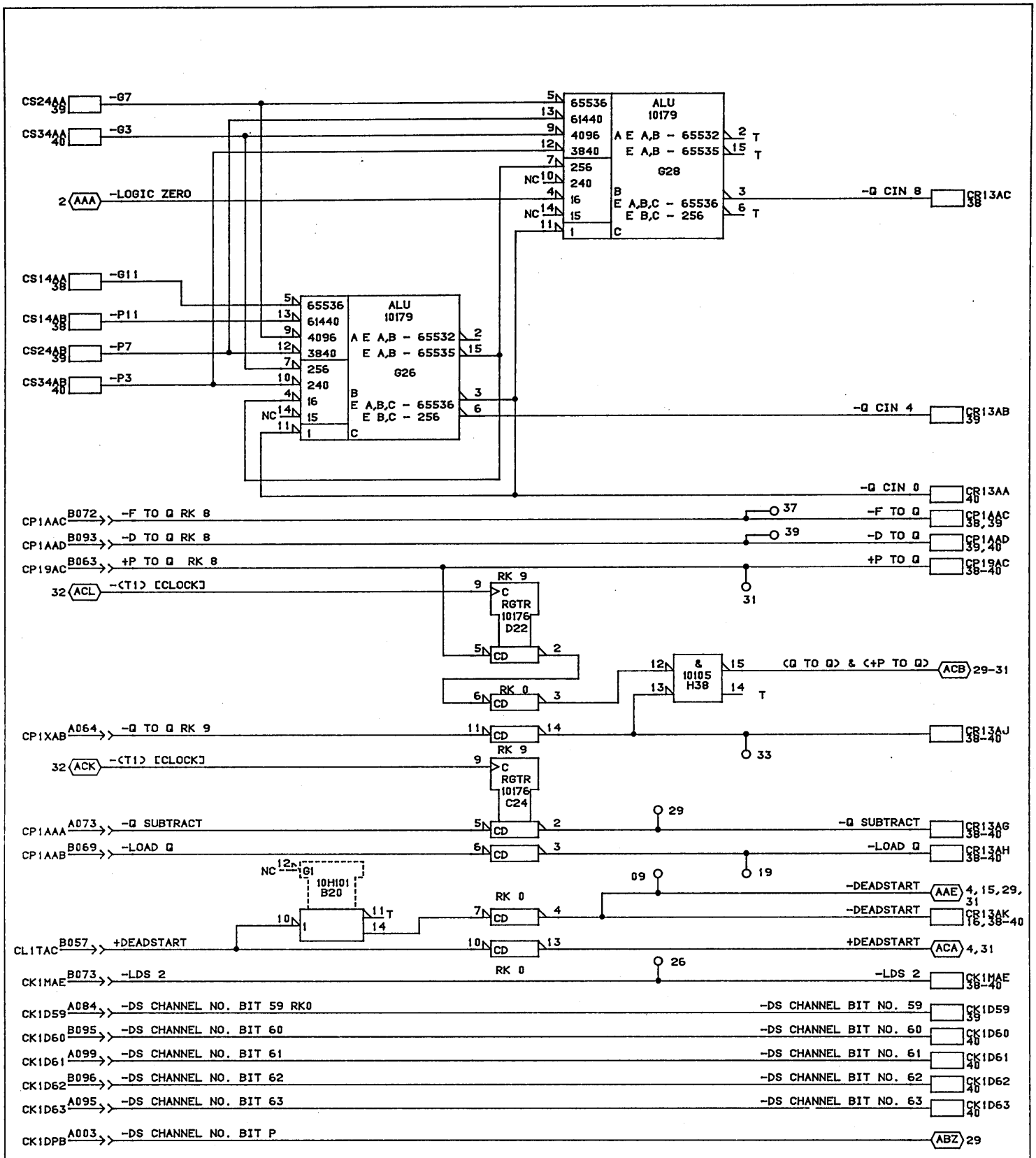

CONTROL DATA CANADA LTD	Q ADDER LOOKAHEAD MODULE ASSEMBLY - 210 PAK TYPE: 1CR0	C		A
		09-NOV-84	SHEET 03	LOC D12

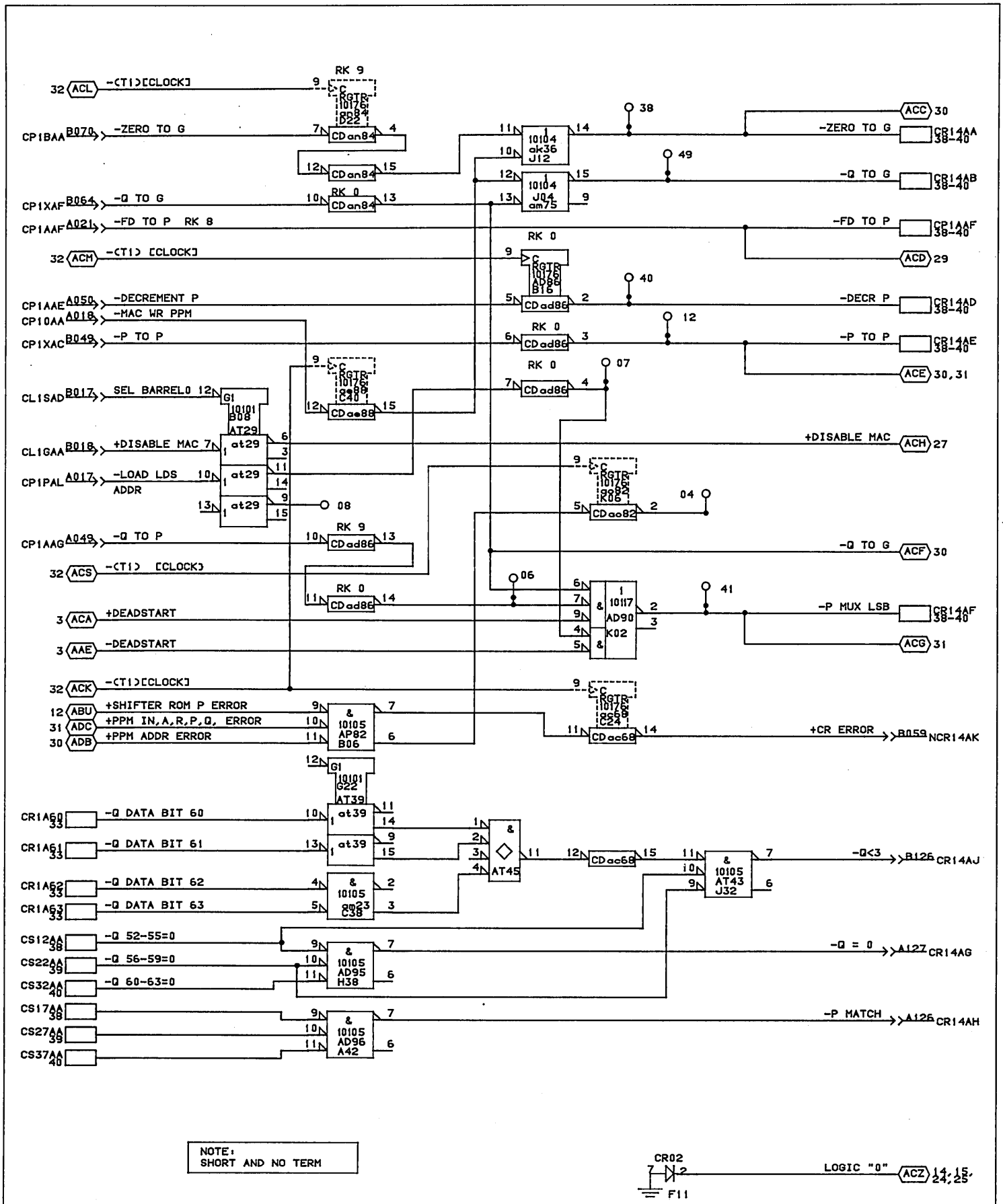

CONTROL DATA CANADA LTD	P MUX LSB Q = 0, P MATCH MODULE ASSEMBLY - 210 PAK TYPE: 1CR0	C		A
		19-JAN-84	SHEET 04	LOC. D12

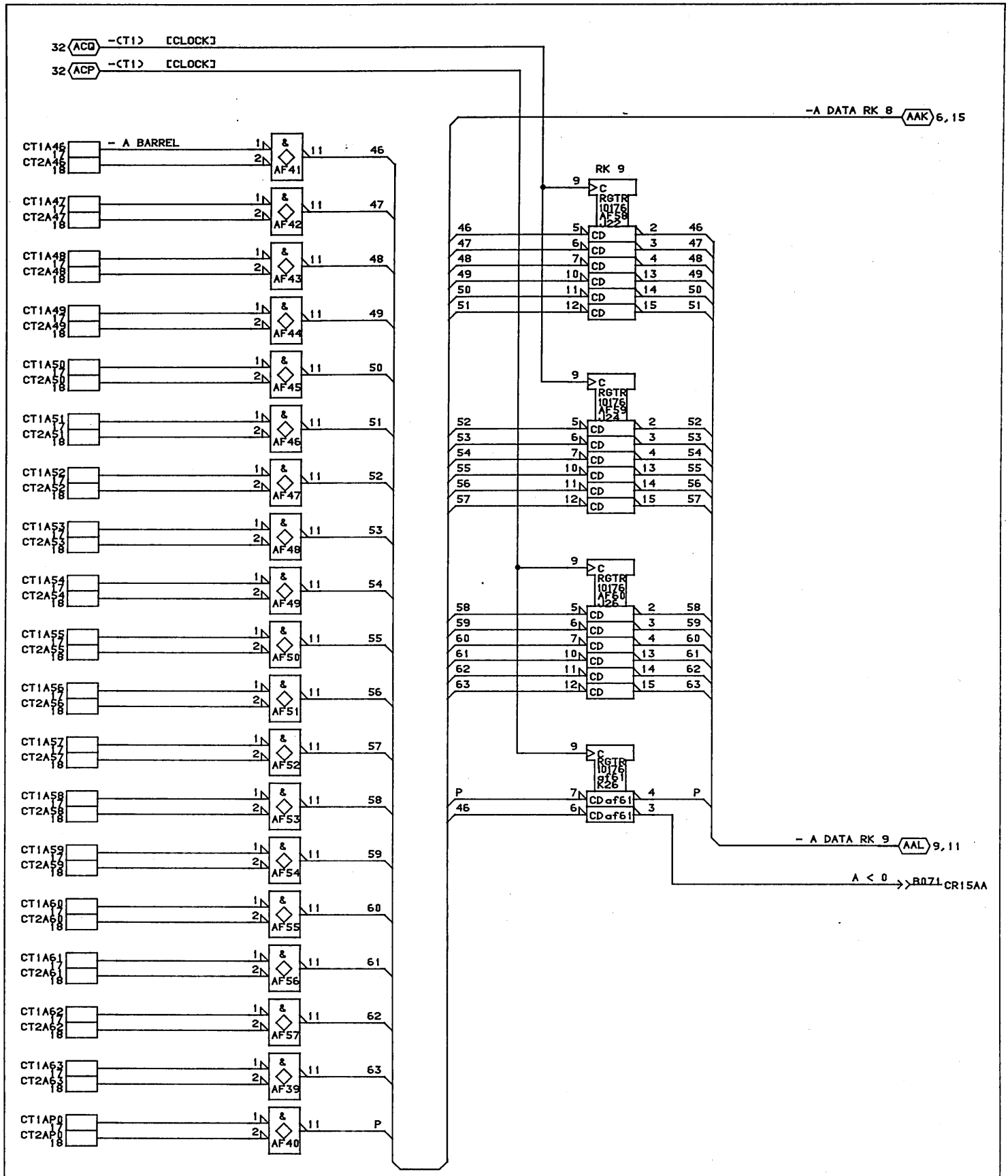

CONTROL DATA CANADA LTD	A REGISTER MODULE ASSEBLY -210 PAK TYPE: 1CRO	C		A
		19-JAN-84	SHEET 05	LOC D12

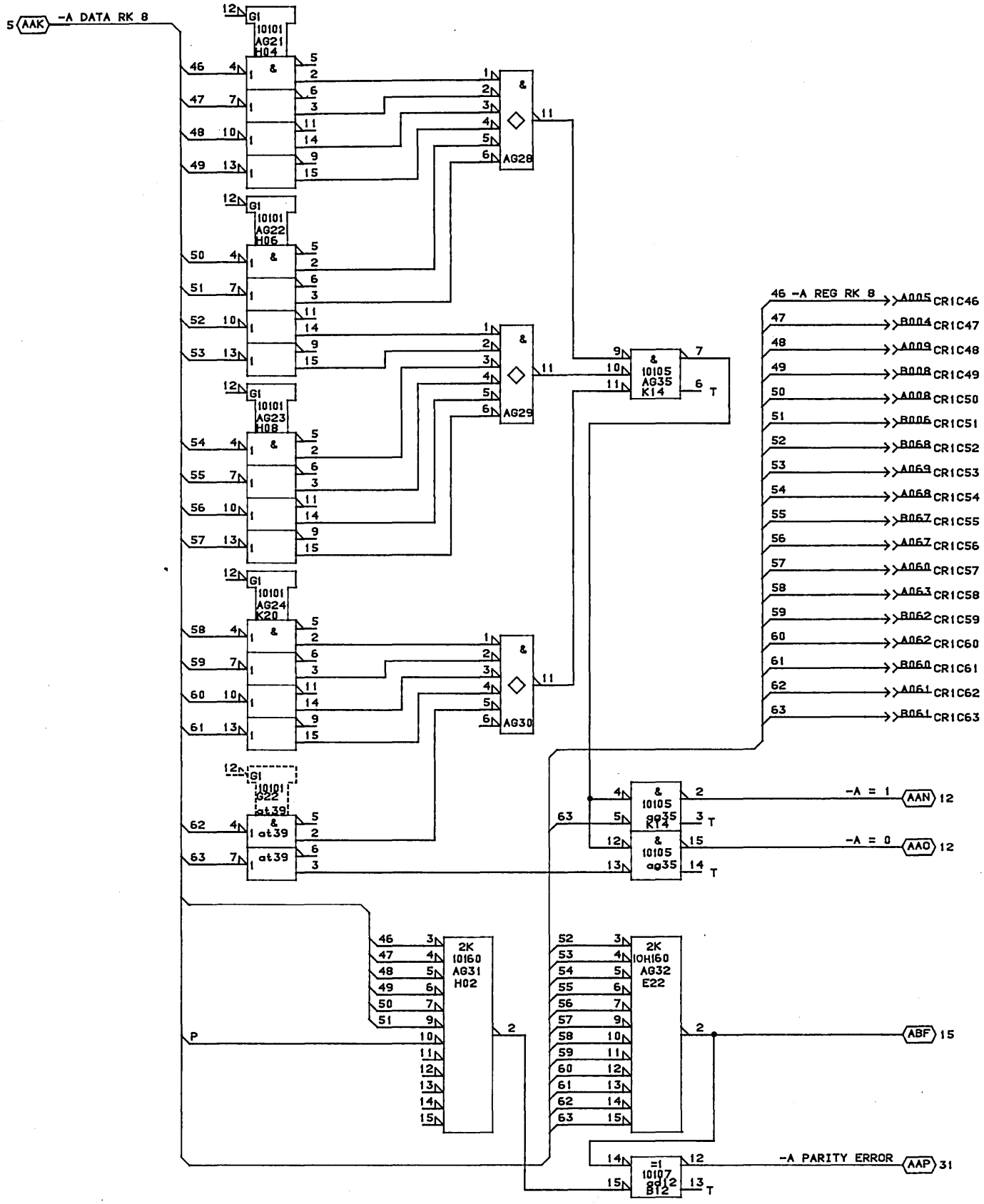

CONTROL DATA CANADA LTD	A = 0,1 DECODE A REGISTER PARITY CHECK/GEN MODULE ASSEMBLY - 210 PAK TYPE: 1CR0	C		A
		19-JAN-84	SHEET 06	LOC D12

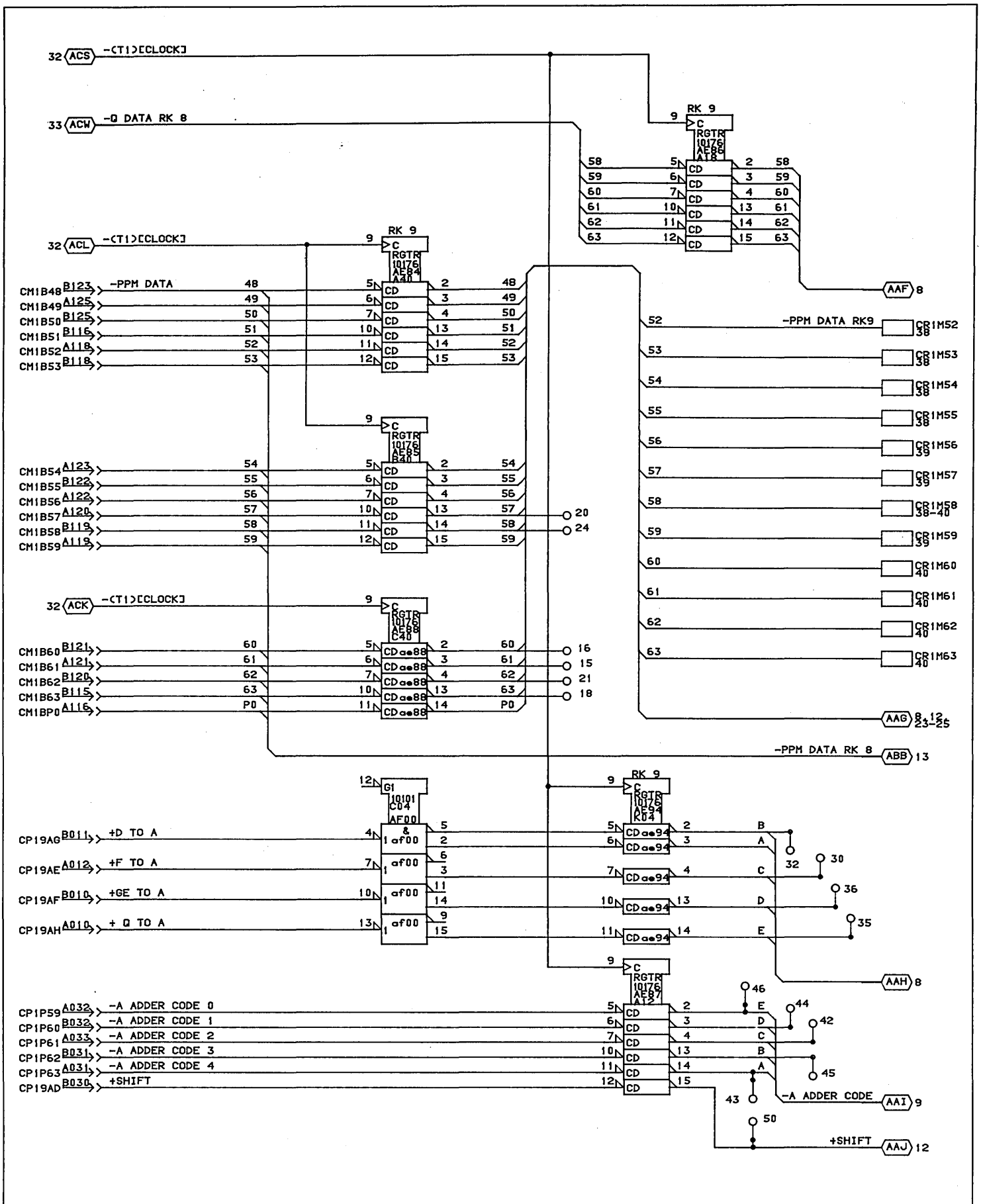

CONTROL DATA CANADA LTD	A ADDER CONTROL A ADDER B OPERAND INPUT DATA MODULE ASSEMBLY -210 PAK TYPE: 1CR0	C		A
		19-JAN-84	SHEET 07	LOC D12

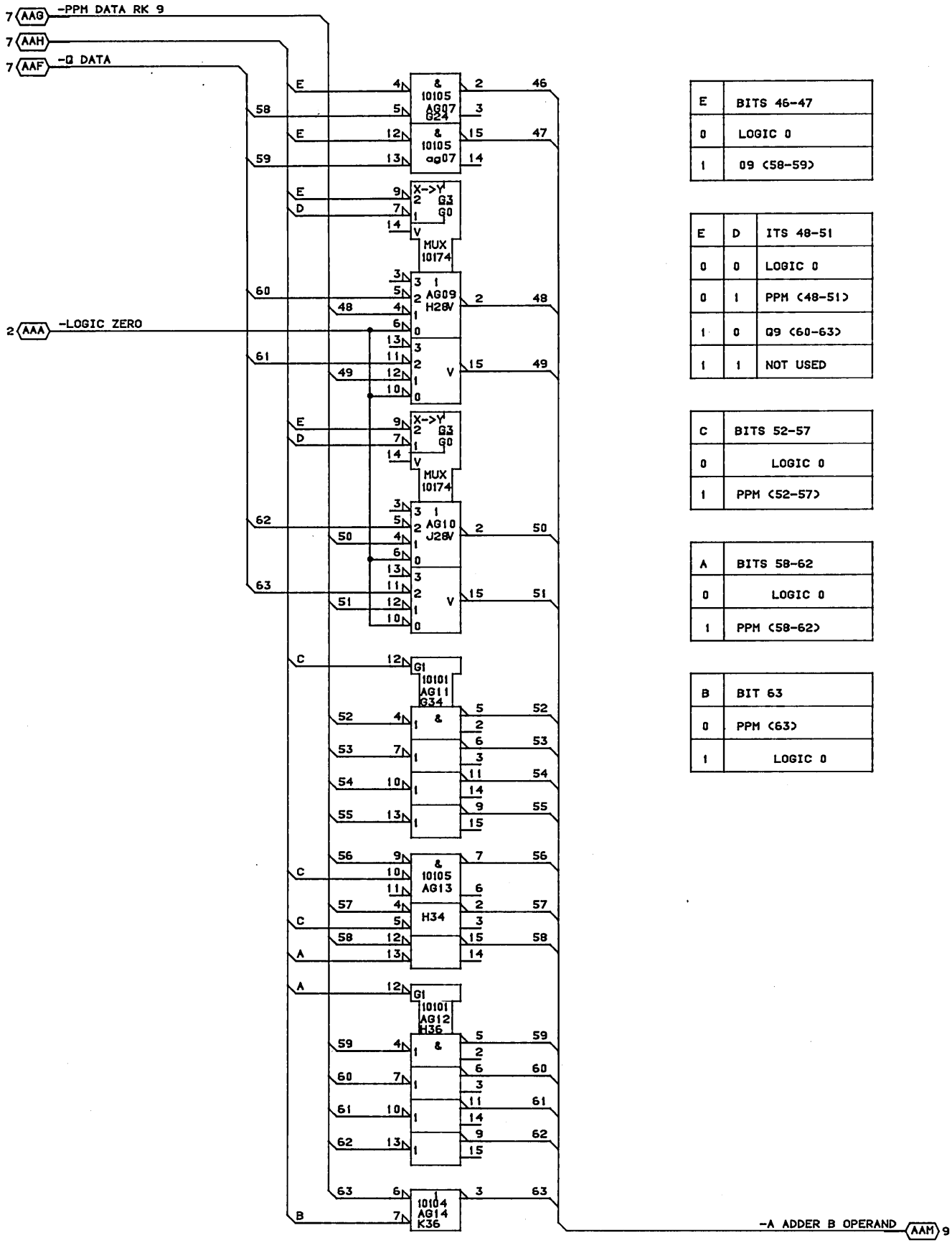

E	BITS 46-47
0	LOGIC 0
1	09 (58-59)

E	D	ITS 48-51
0	0	LOGIC 0
0	1	PPM (48-51)
1	0	Q9 (60-63)
1	1	NOT USED

C	BITS 52-57
0	LOGIC 0
1	PPM (52-57)

A	BITS 58-62
0	LOGIC 0
1	PPM (58-62)

B	BIT 63
0	PPM (63)
1	LOGIC 0

CONTROL DATA CANADA LTD	A ADDER B OPERAND MUX MODULE ASSEMBLY - 210 PAK TYPE: 1CR0	C		A
		19-JAN-84	SHEET 08	LOC D12

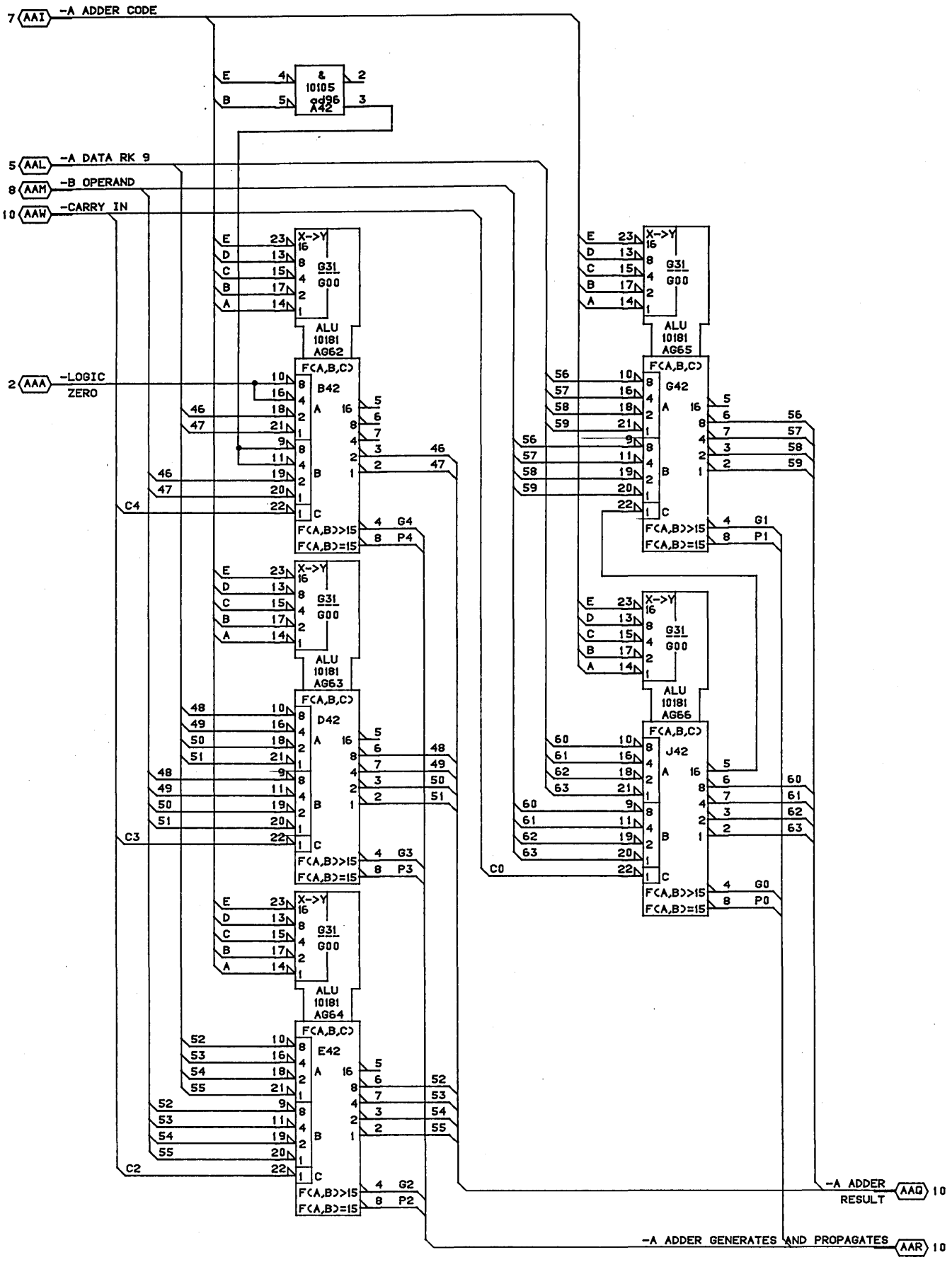

CONTROL DATA CANADA LTD	A ADDER MODULE ASSEMBLY - 210 PAK TYPE: 1CR0	C		A
		19-JAN-84	SHEET 09	LOC D12

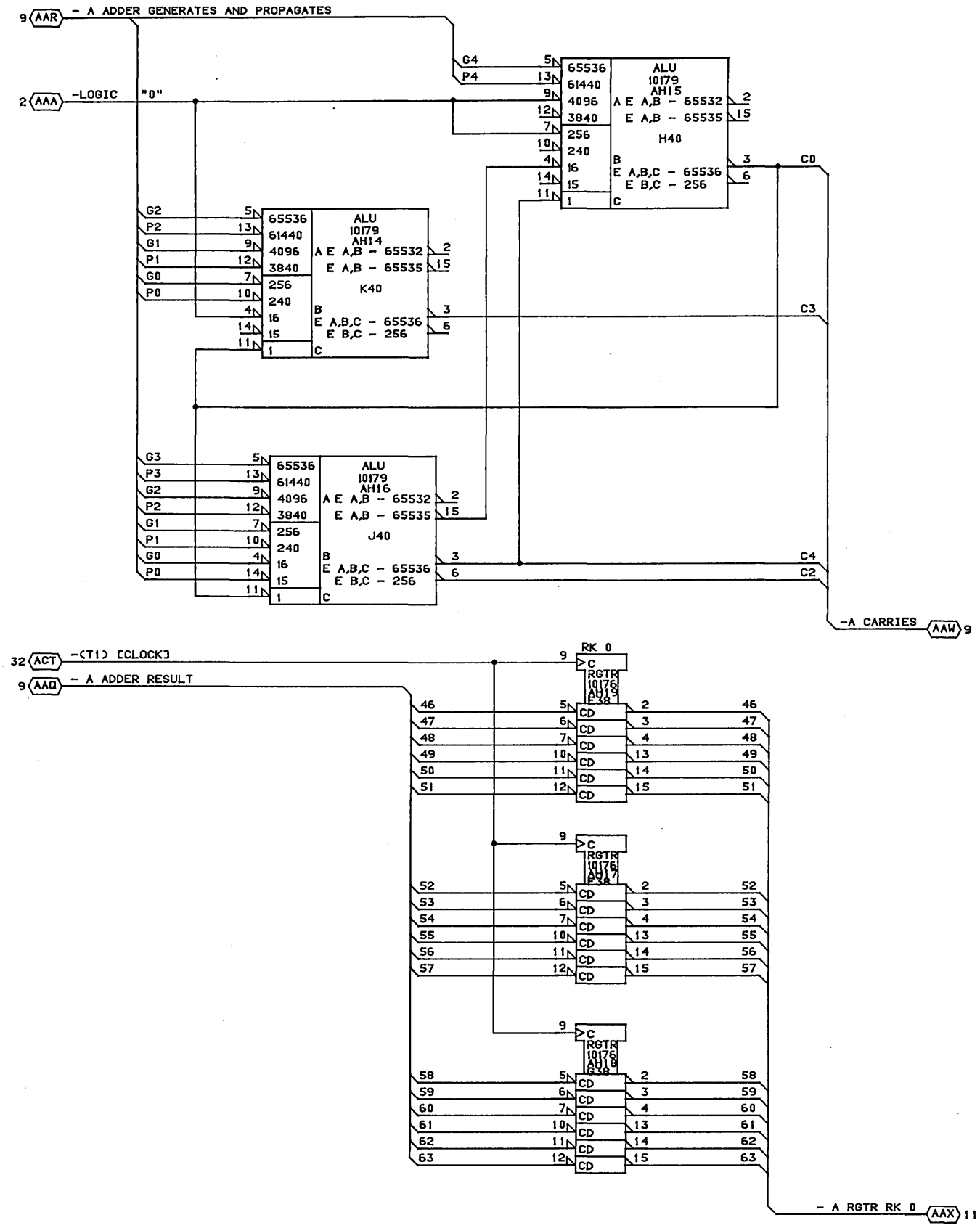

CONTROL DATA CANADA LTD	A ADDER LOOK AHEAD A ADDER OUTPUT REGISTER MODULE ASSEMBLY - 210 PAK TYPE: 1CR0	C		A
		19-JAN-84	SHEET 10	LOC D12

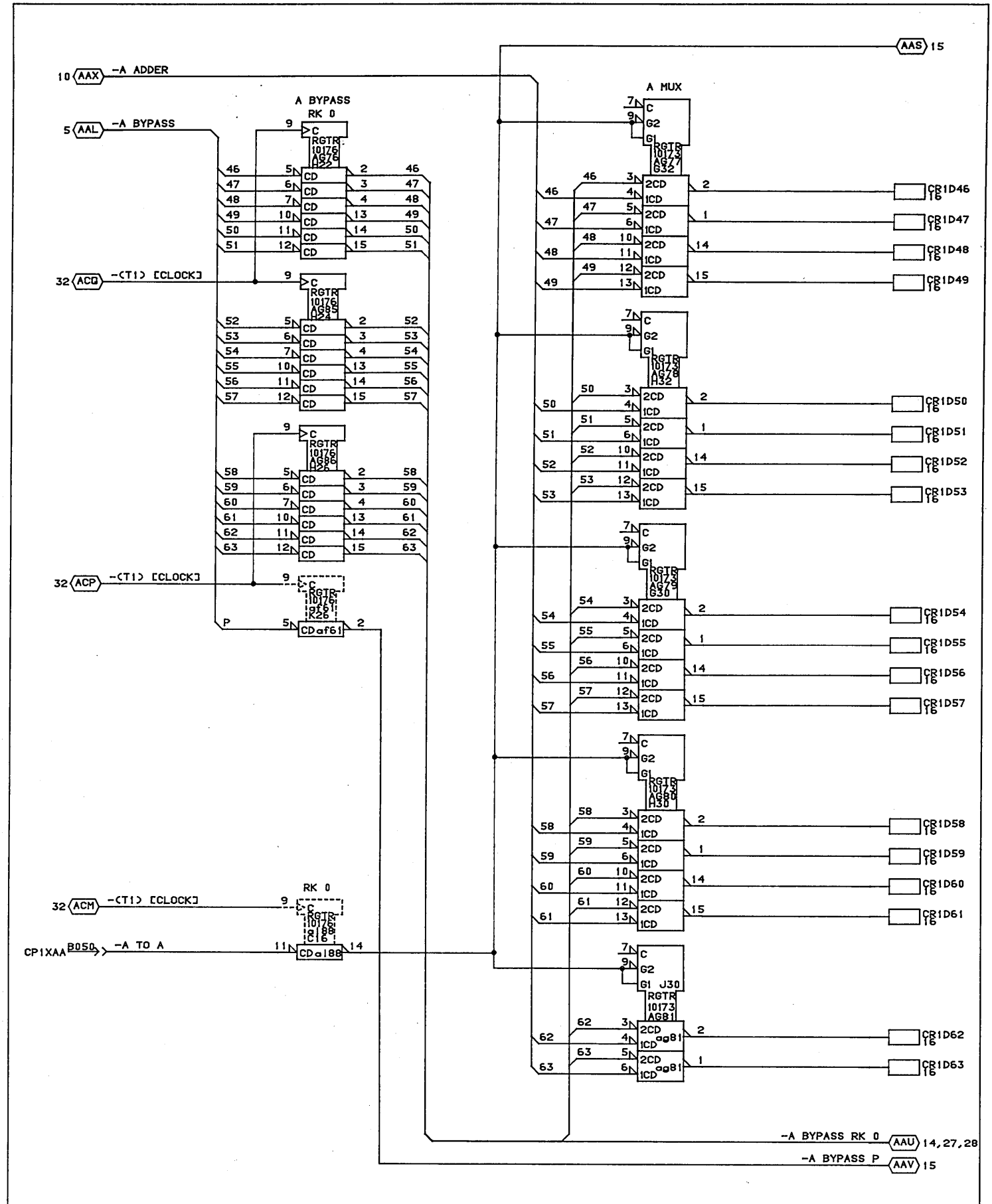

CONTROL DATA CANADA LTD	A BYPASS REGISTER A MUX MODULE ASSEMBLY - 210 PAK TYPE: 1CR0	C		A
		19-JAN-84	SHEET 11	LOC D12

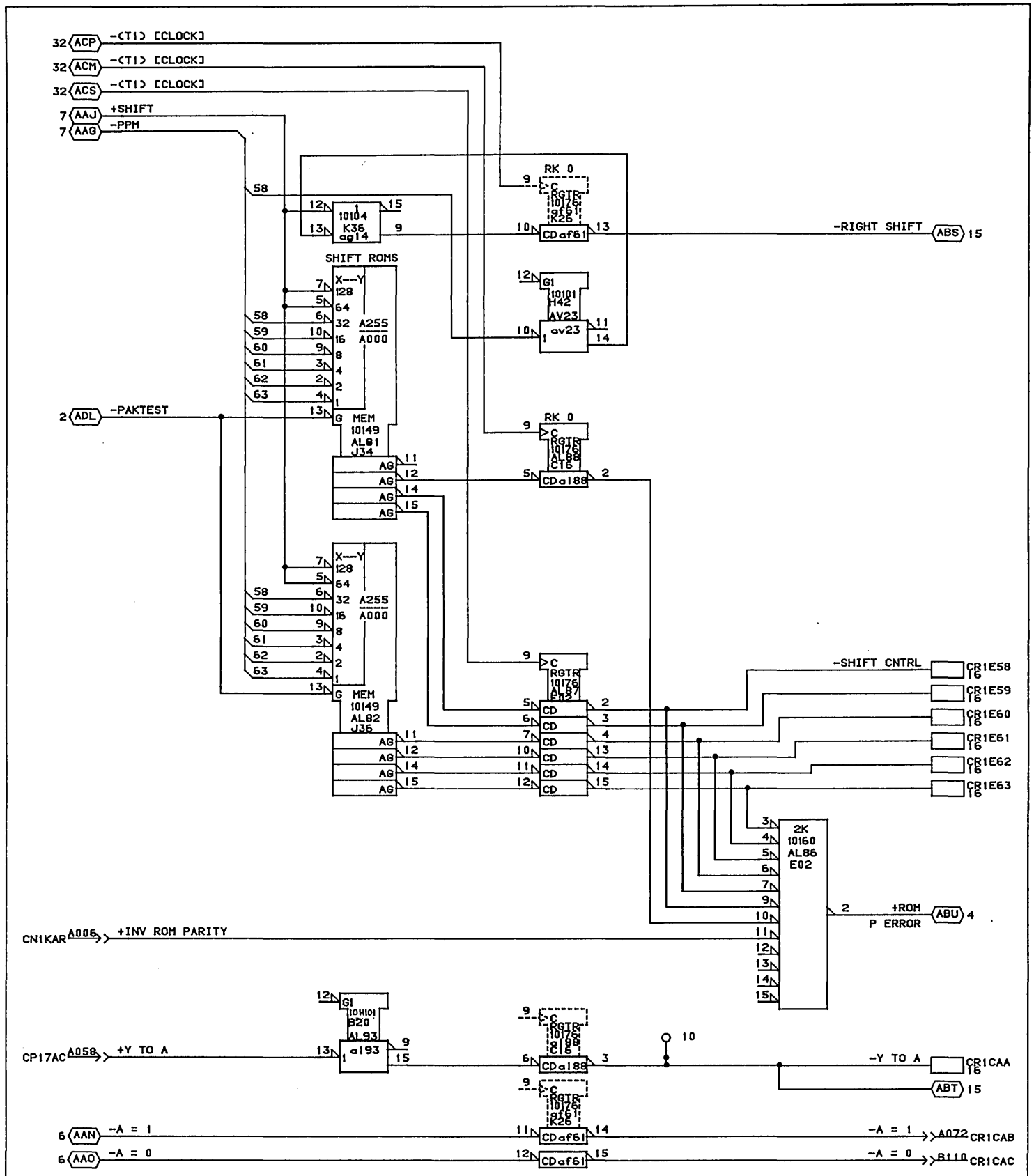

CONTROL DATA CANADA LTD	SHIFTER ROMS MODULE ASSEMBLY TYPE: 1CR0	C		A
		20-JAN-84	SHEET 12	LOC D12

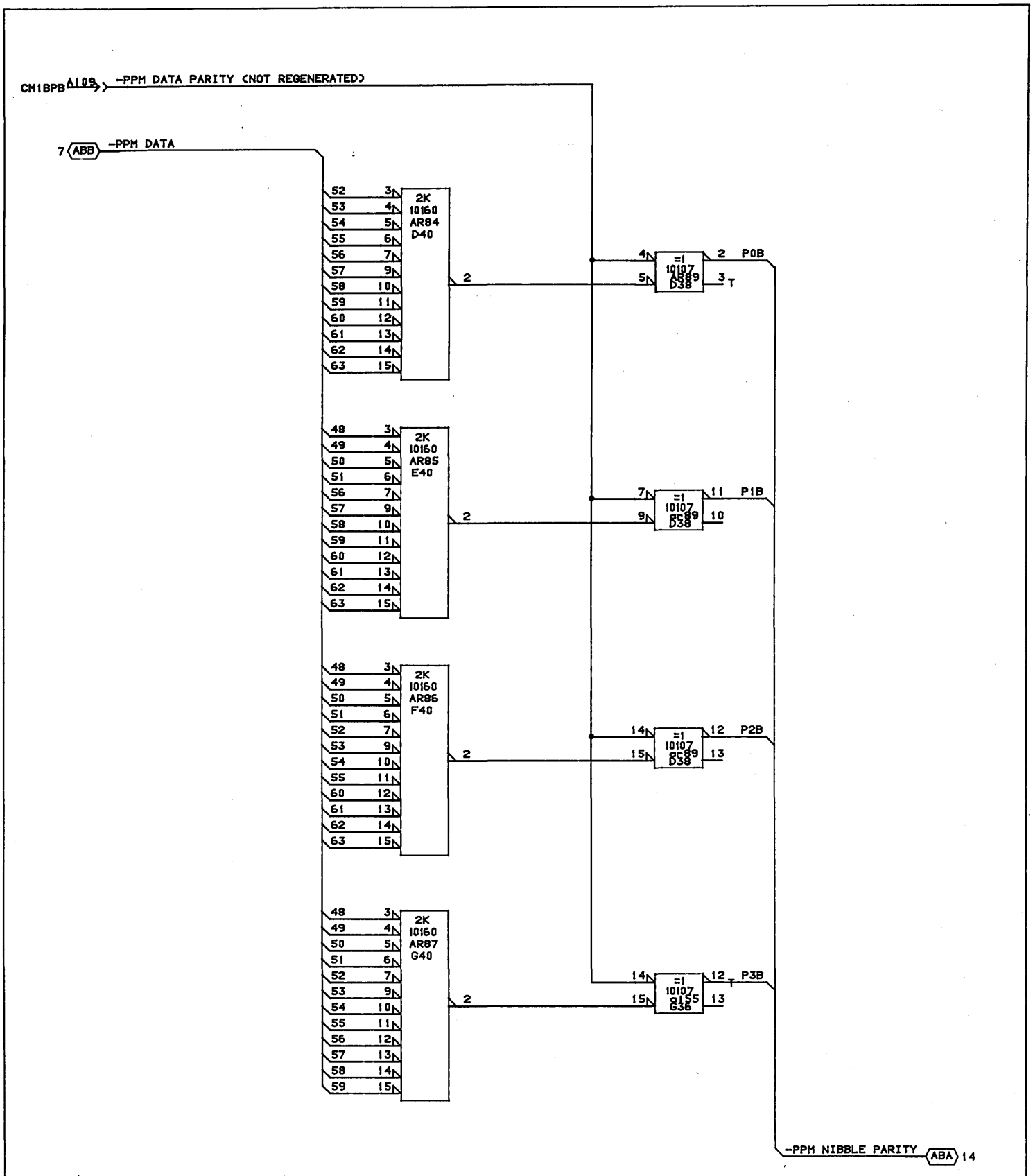

CONTROL DATA CANADA LTD	PPM NIBBLE PARITY GEN MODULE ASSEMBLY-210 PAK TYPE: 1CR0	C		A
		19-JAN-84	SHEET 13	LOC D12

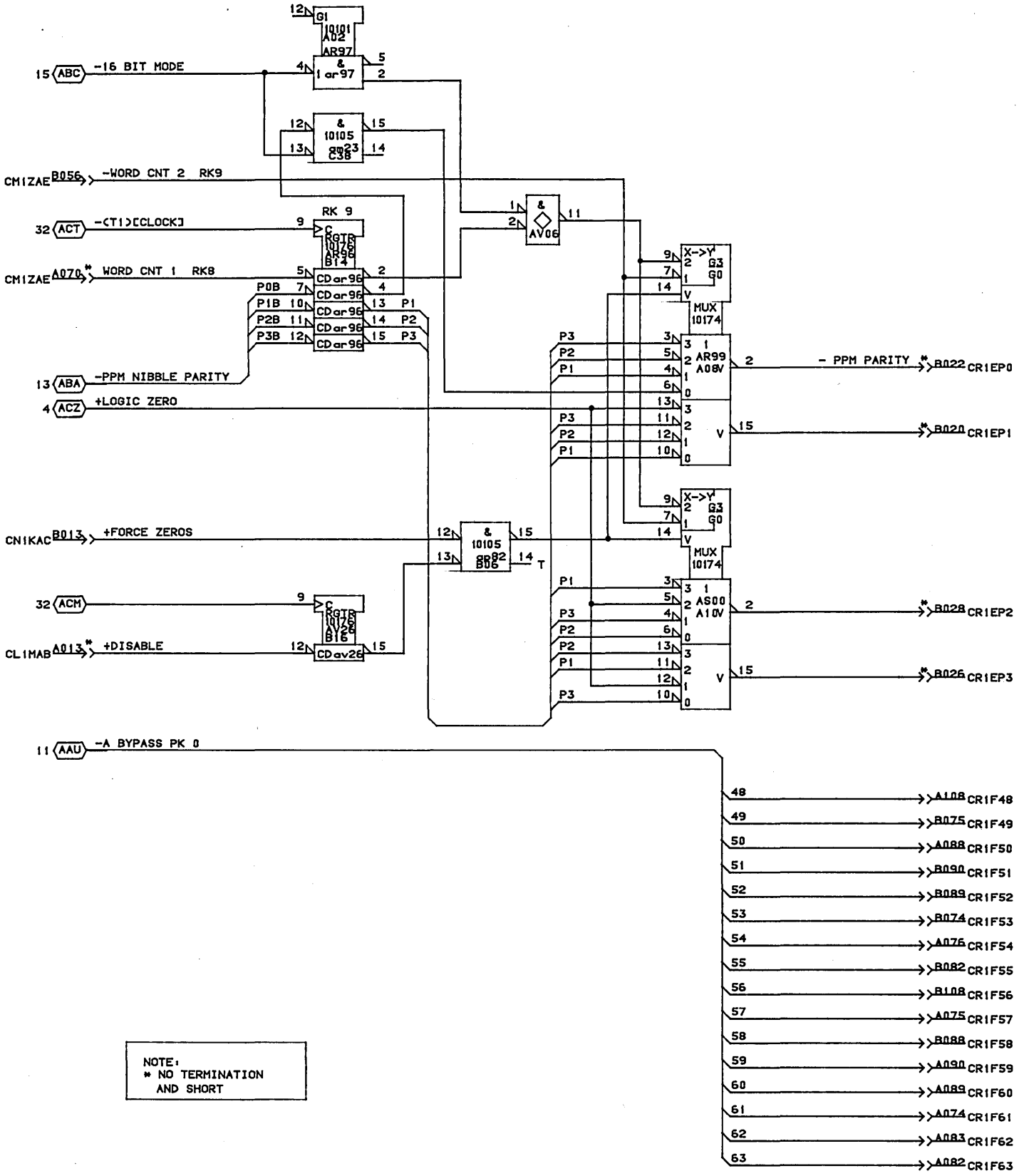

NOTE:
* NO TERMINATION AND SHORT

CONTROL DATA CANADA LTD	PPM NIBBLE PARITY MUX MODULE ASSEMBLY-210 PAK TYPE: 1CR0	C		A
		19-JAN-84	SHEET 14	LOC D12

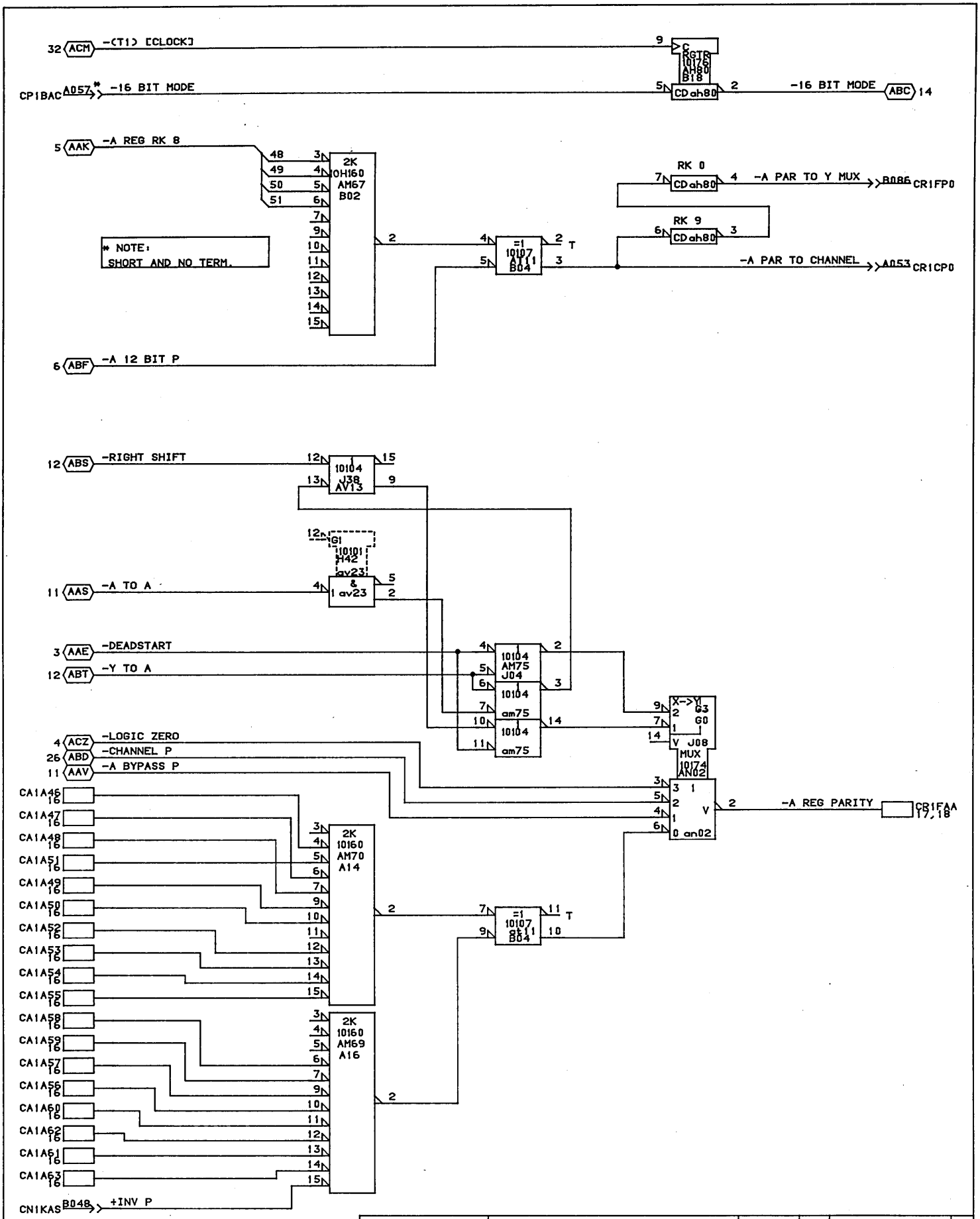

CONTROL DATA CANADA LTD	A REG PARITY 16/12 BIT PARITY MODULE ASSEMBLY - 210 PAK TYPE: 1CR0	C		A
		19-JAN-84	SHEET 15	LOC D12

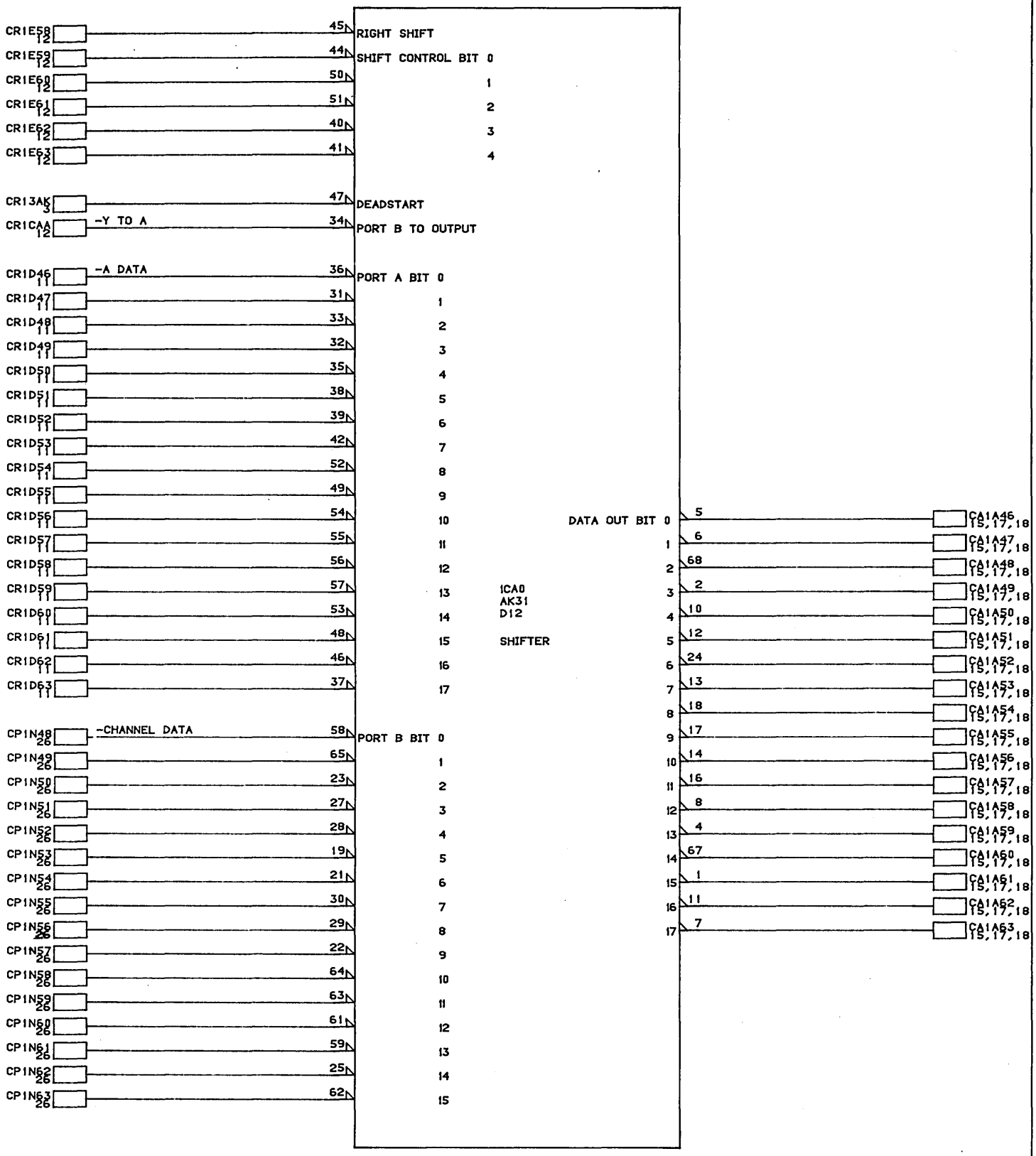

CONTROL DATA CANADA LTD	SHIFTER Y TO A MUX MODULE ASSEMBLY - 210 PAK TYPE: 1CR0	C		A
		20-JAN-84	SHEET 16	LOC D12

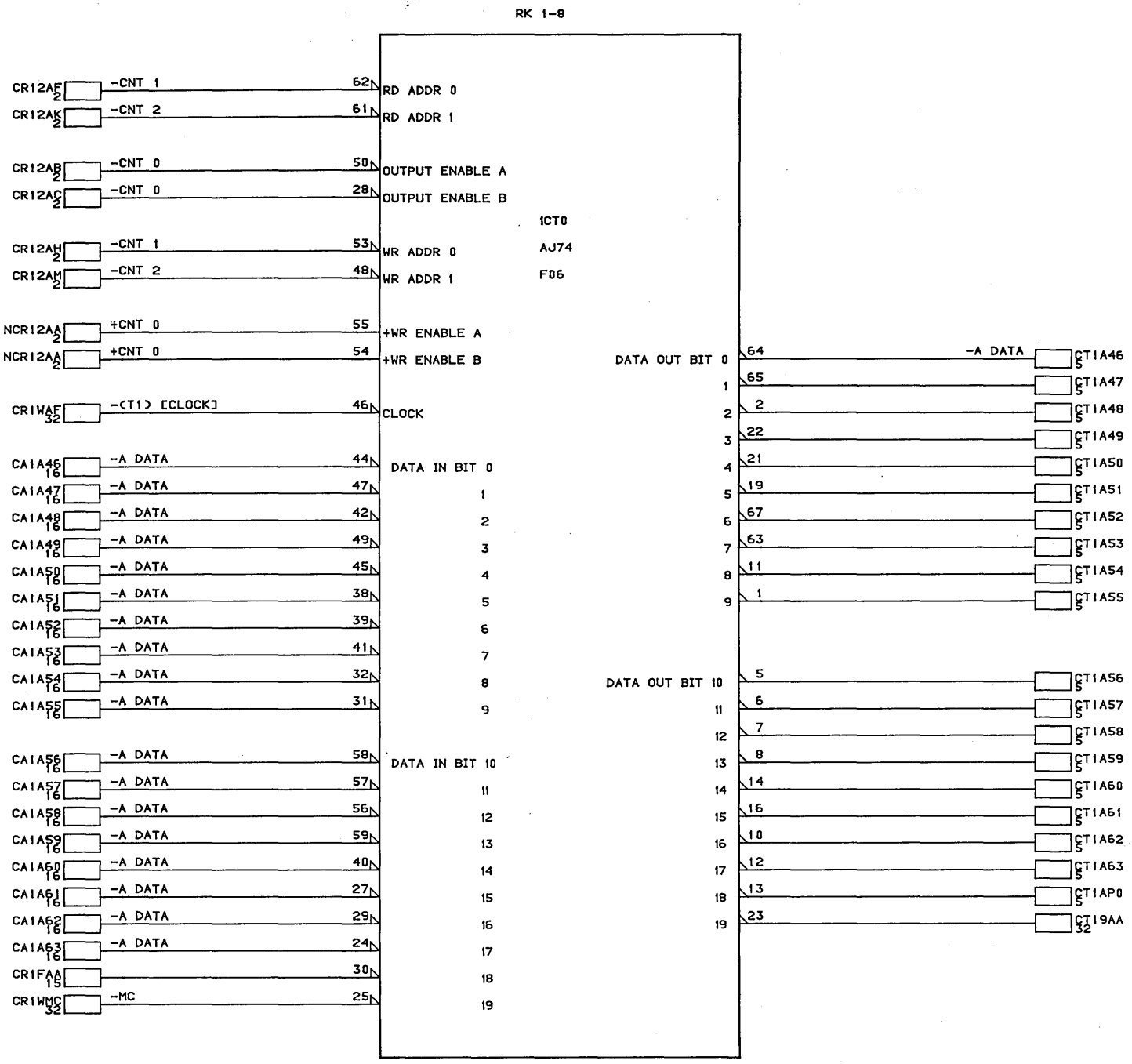

CONTROL DATA CANADA LTD	A BARREL (BITS 46-63) CHIP 1 MODULE ASSEMBLY - 210 PAK TYPE: 1CR0	C		A
		20-JAN-84	SHEET 17	LOC D12

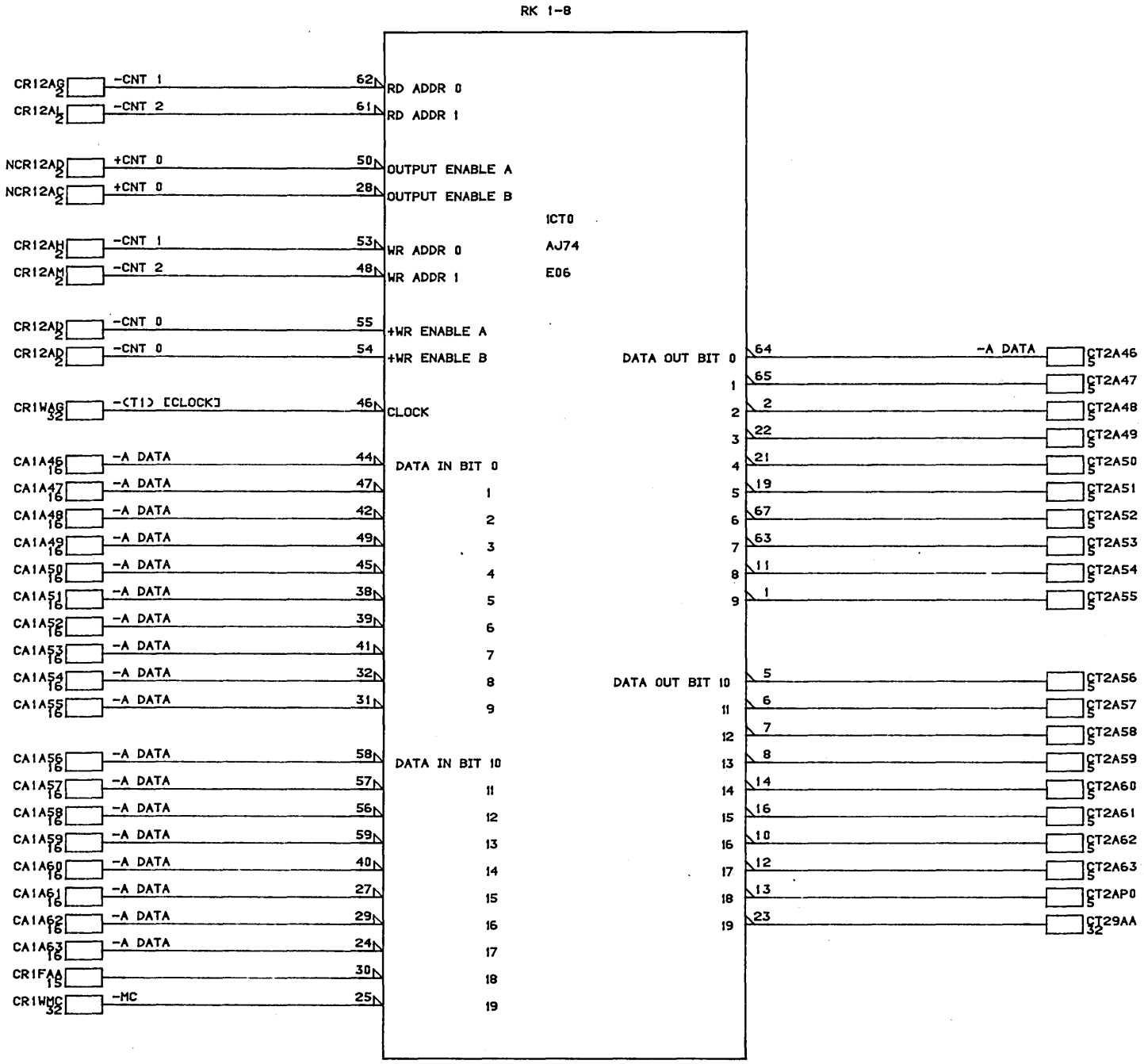

CONTROL DATA CANADA LTD	A BARREL (BITS 46-63) CHIP 2 MODULE ASSEMBLY - 210 PAK TYPE: 1CR0	C		A
		20-JAN-84	SHEET 18	LOC D12

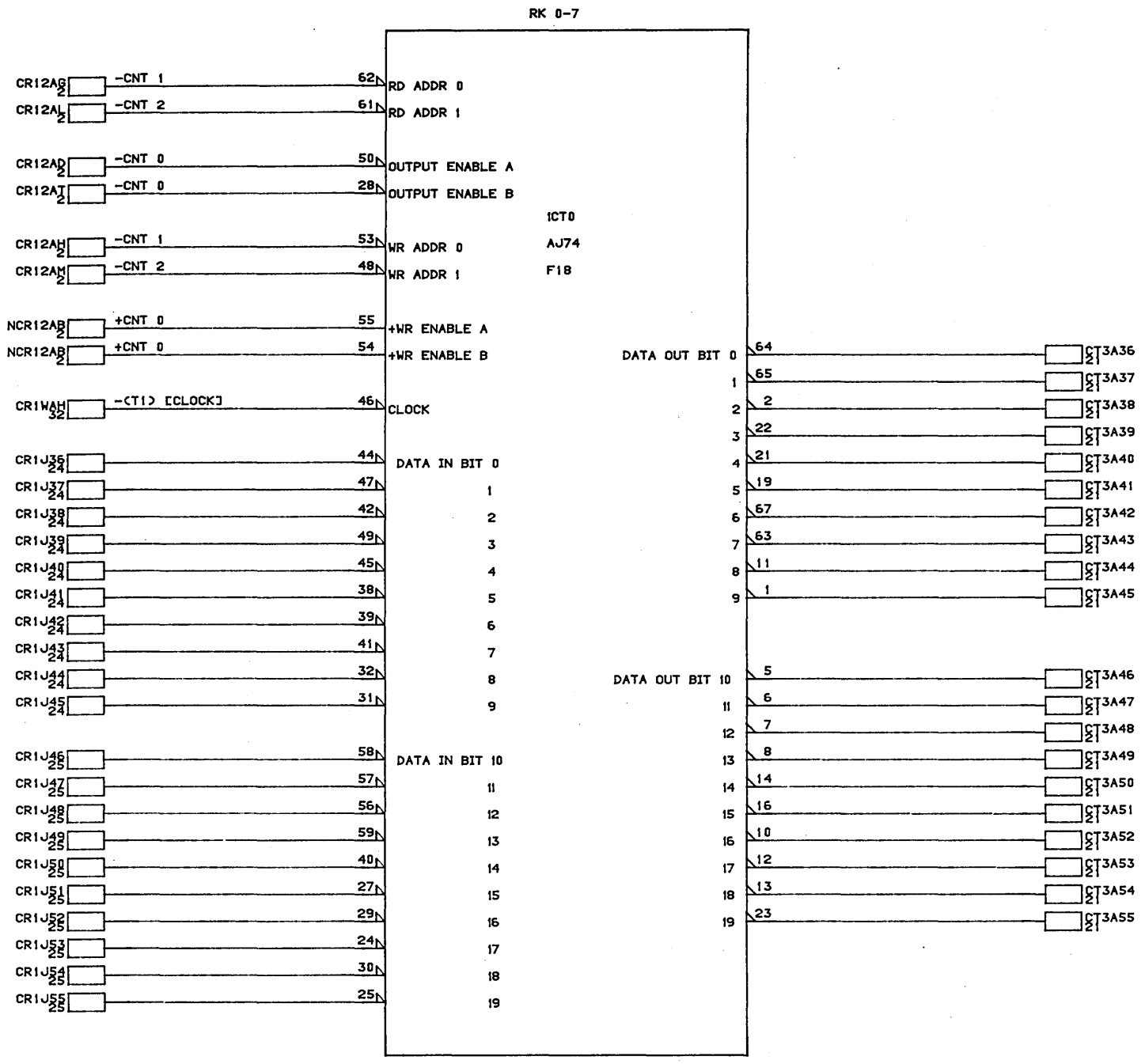

CONTROL DATA CANADA LTD	R BARREL (BITS 36-55) CHIP 1 MODULE ASSEMBLY - 210 PAK TYPE: 1CR0	C		A
		20-JAN-84	SHEET 19 / LOC. D12	

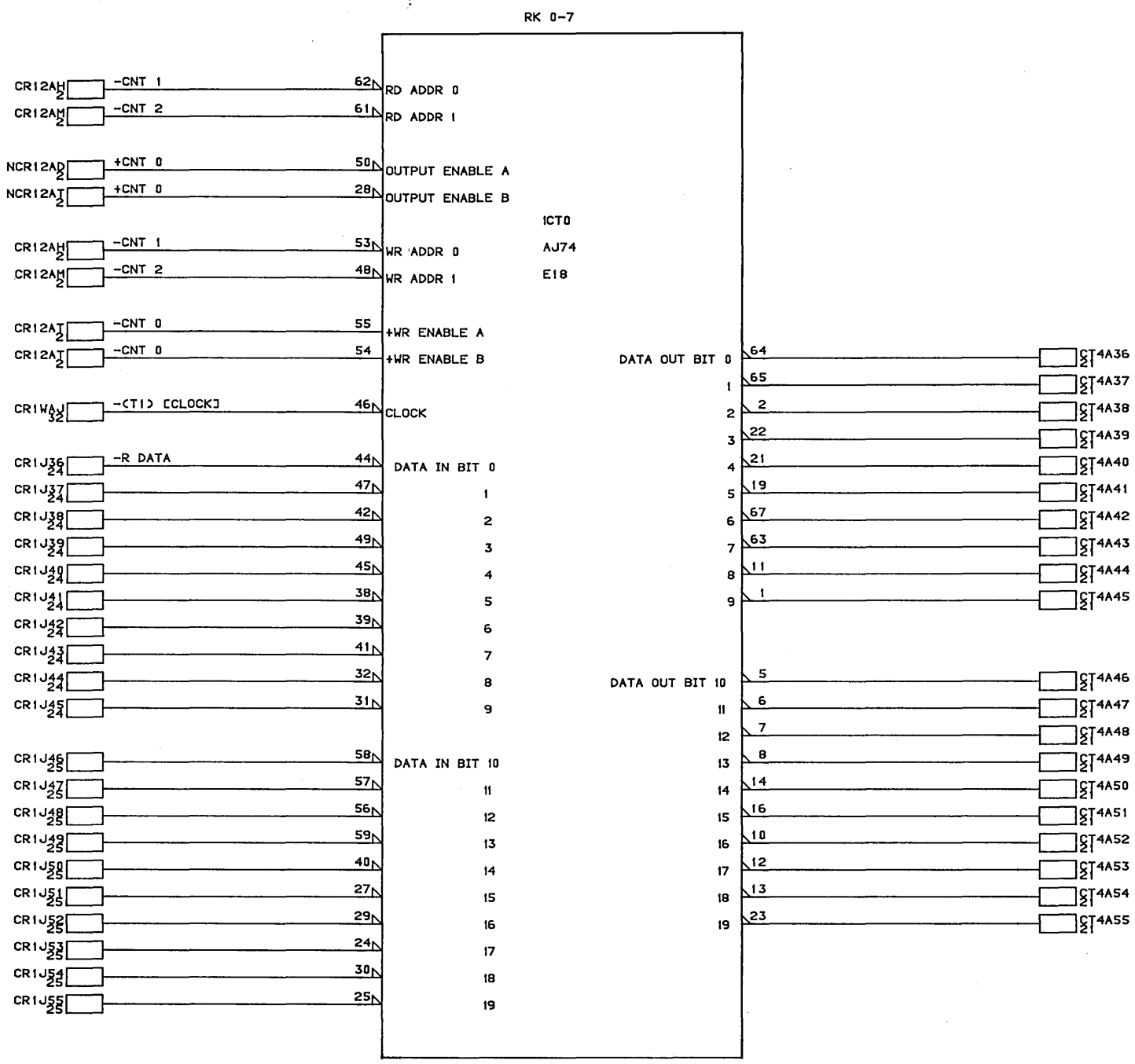

CONTROL DATA CANADA LTD	R BARREL (BITS 36-55) CHIP 2 MODULE ASSEMBLY - 210 PAK TYPE: 1CR0	C		A
		20-JAN-84	SHEET 20	LOC. D12

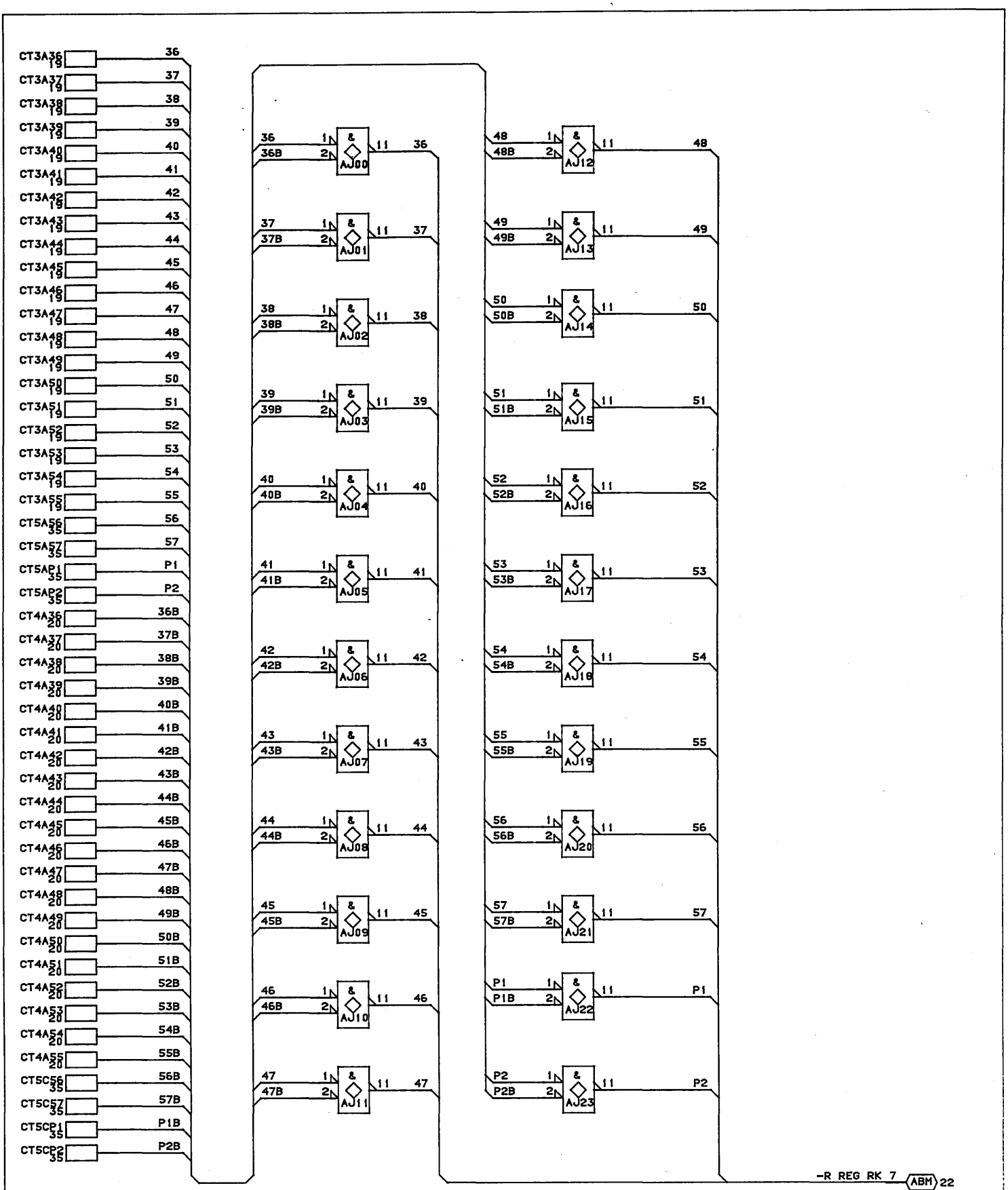

CONTROL DATA CANADA LTD	R BARREL ASSEMBLY MODULE ASSEMBLY -210 PAK TYPE: 1CR0	C		A
		19-JAN-84	SHEET 21	LOC D12

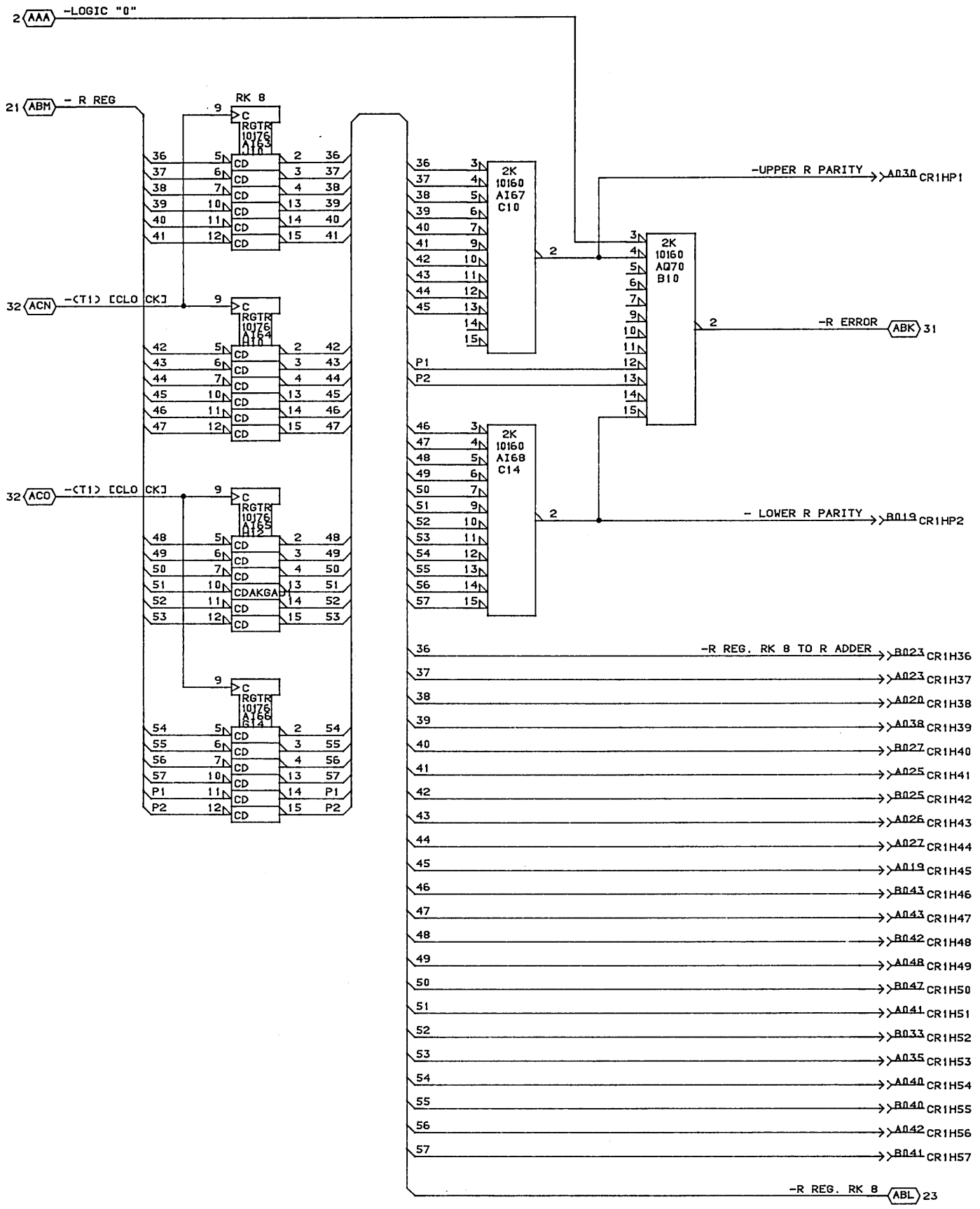

CONTROL DATA CANADA LTD	- R PARITY CHECKER/GEN MODULE ASSEMBLY -210 PAK TYPE: 1CR0	C		A
		19-JAN-84	SHEET 22	LOC D12

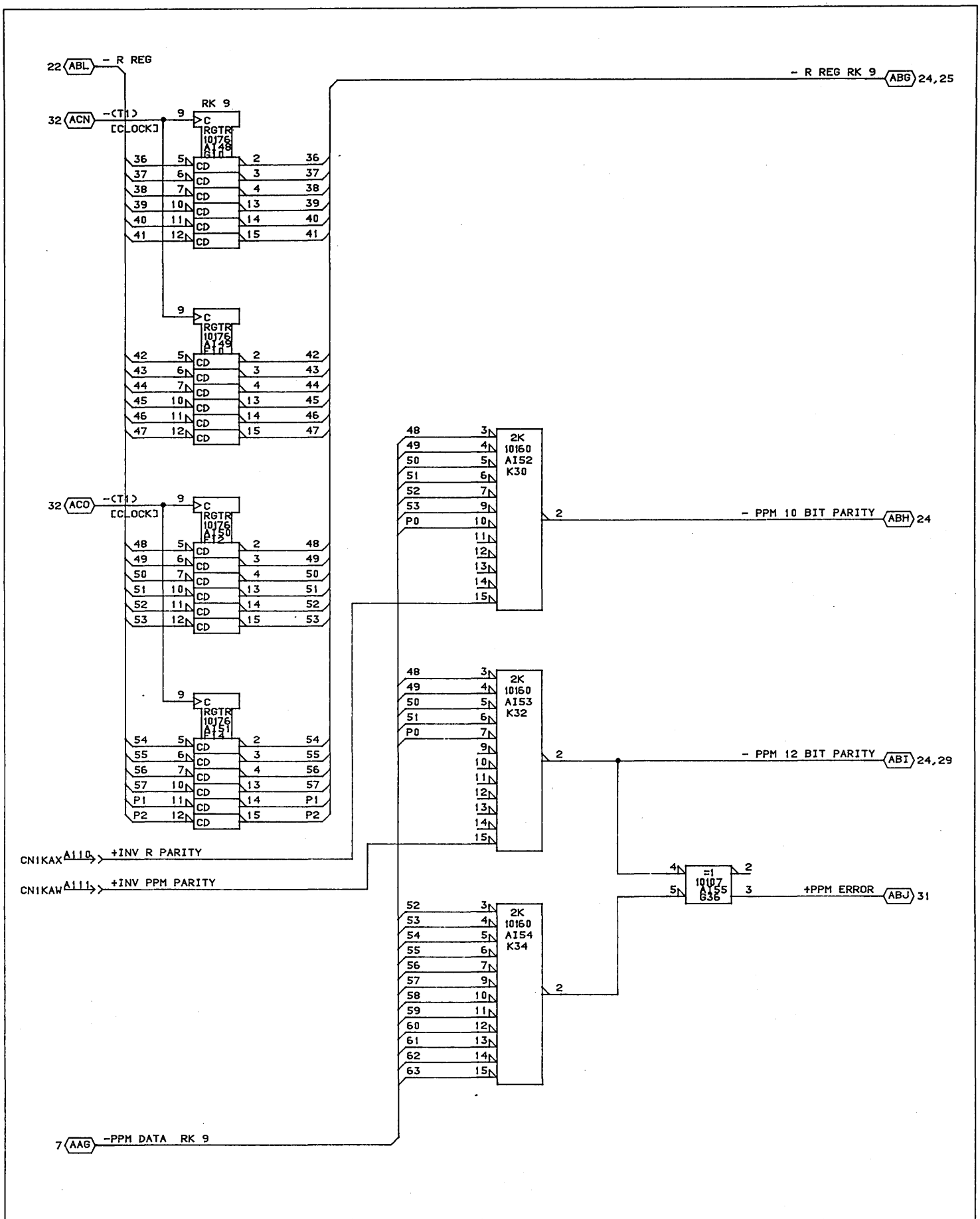

CONTROL DATA CANADA LTD	PPM PARITY CHECKER/GEN MODULE ASSEMBLY -210 PAK TYPE: 1CR0	C		4
		19-JAN-84	SHEET 23	LOC. D12

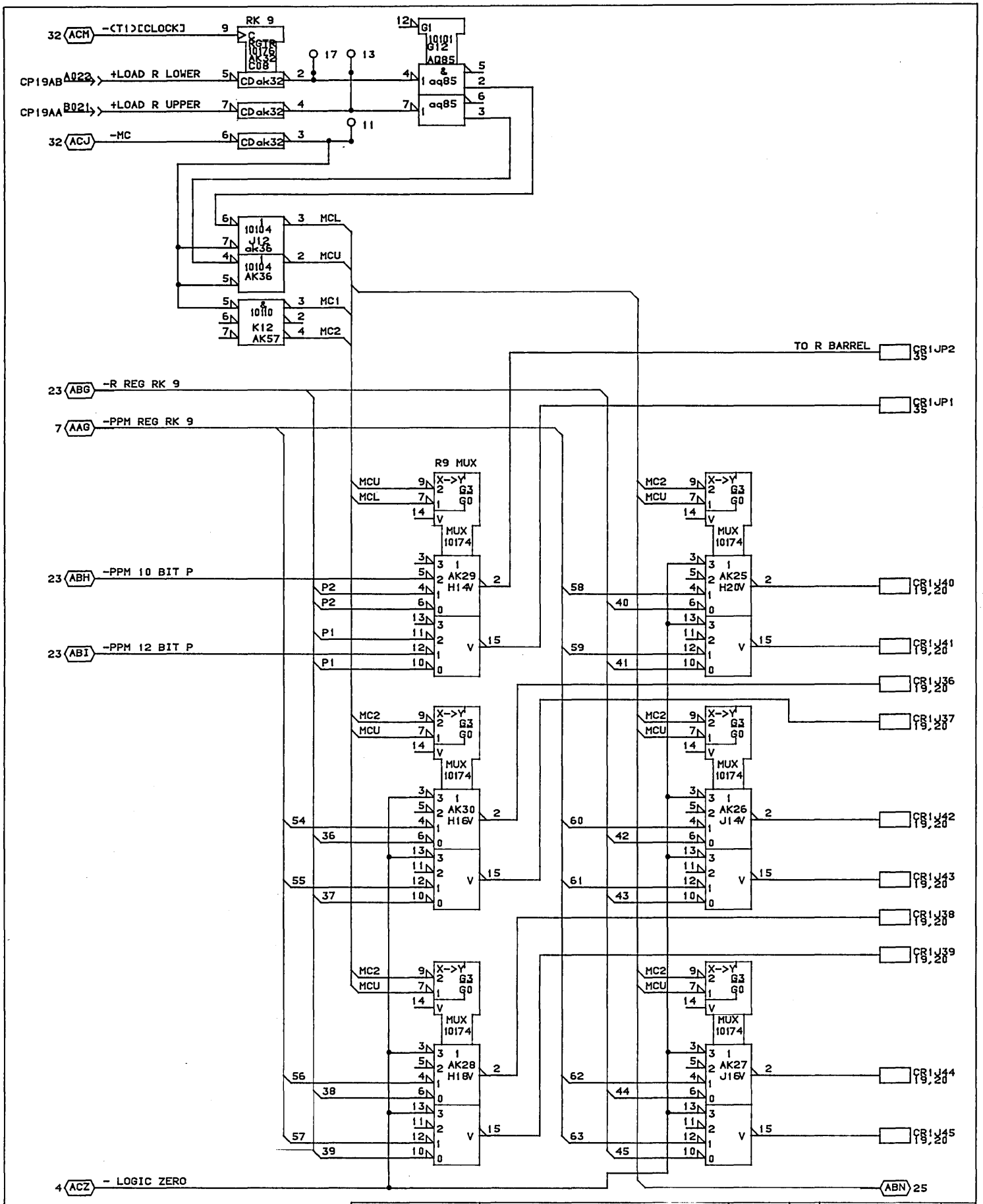

CONTROL DATA CANADA LTD	R MUX<BIT 36-45 ,P1,P2> MODULE ASSEMBLY-210 PAK TYPE: 1CR0	C		A
		19-JAN-84	SHEET24	LOC. D12

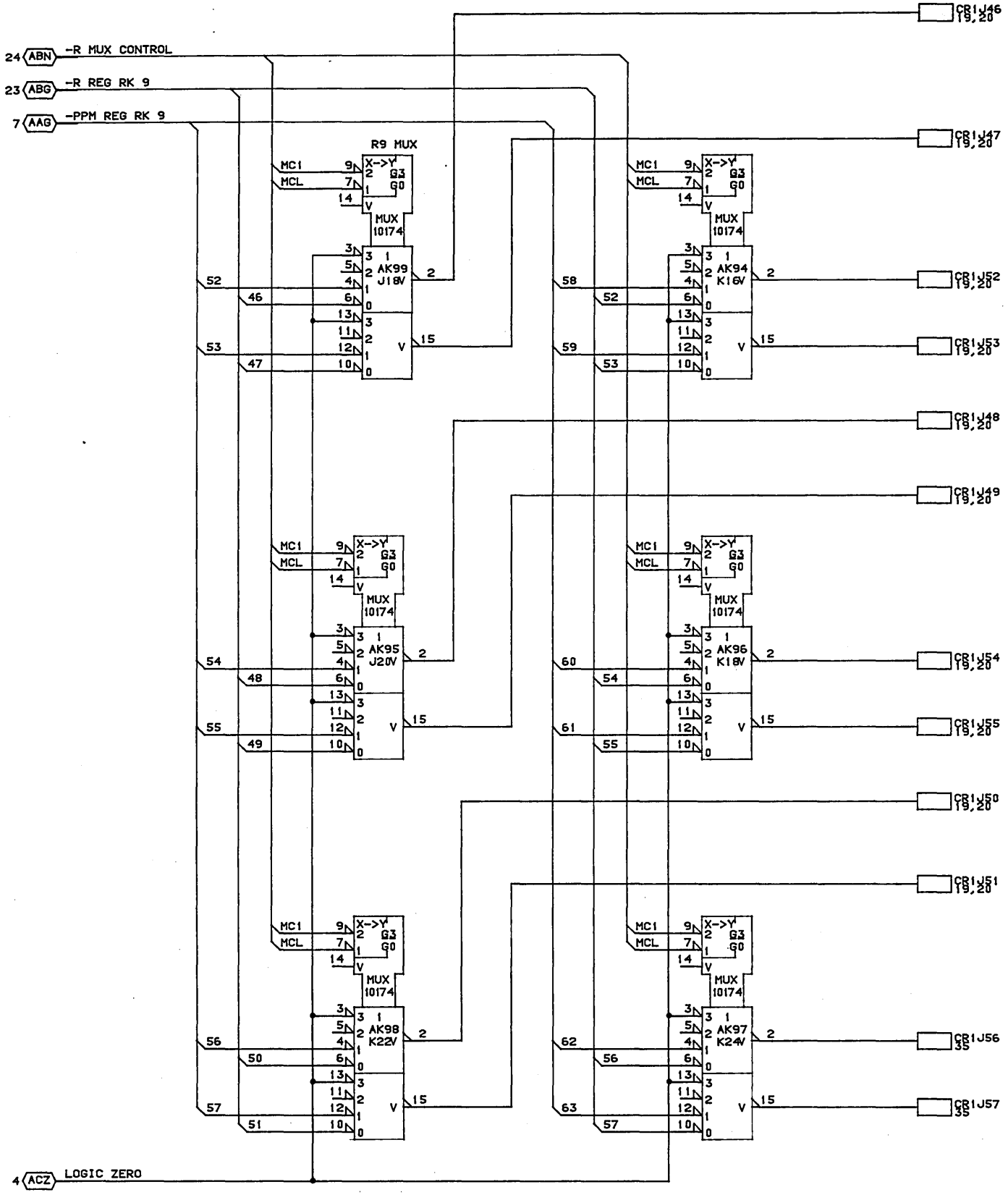

CONTROL DATA CANADA LTD	R MUX (BITS 46-57) MODULE ASSEMBLY -210 PAK TYPE: 1CR0	C		A
		19-JAN-84	SHEET25	LOC D12

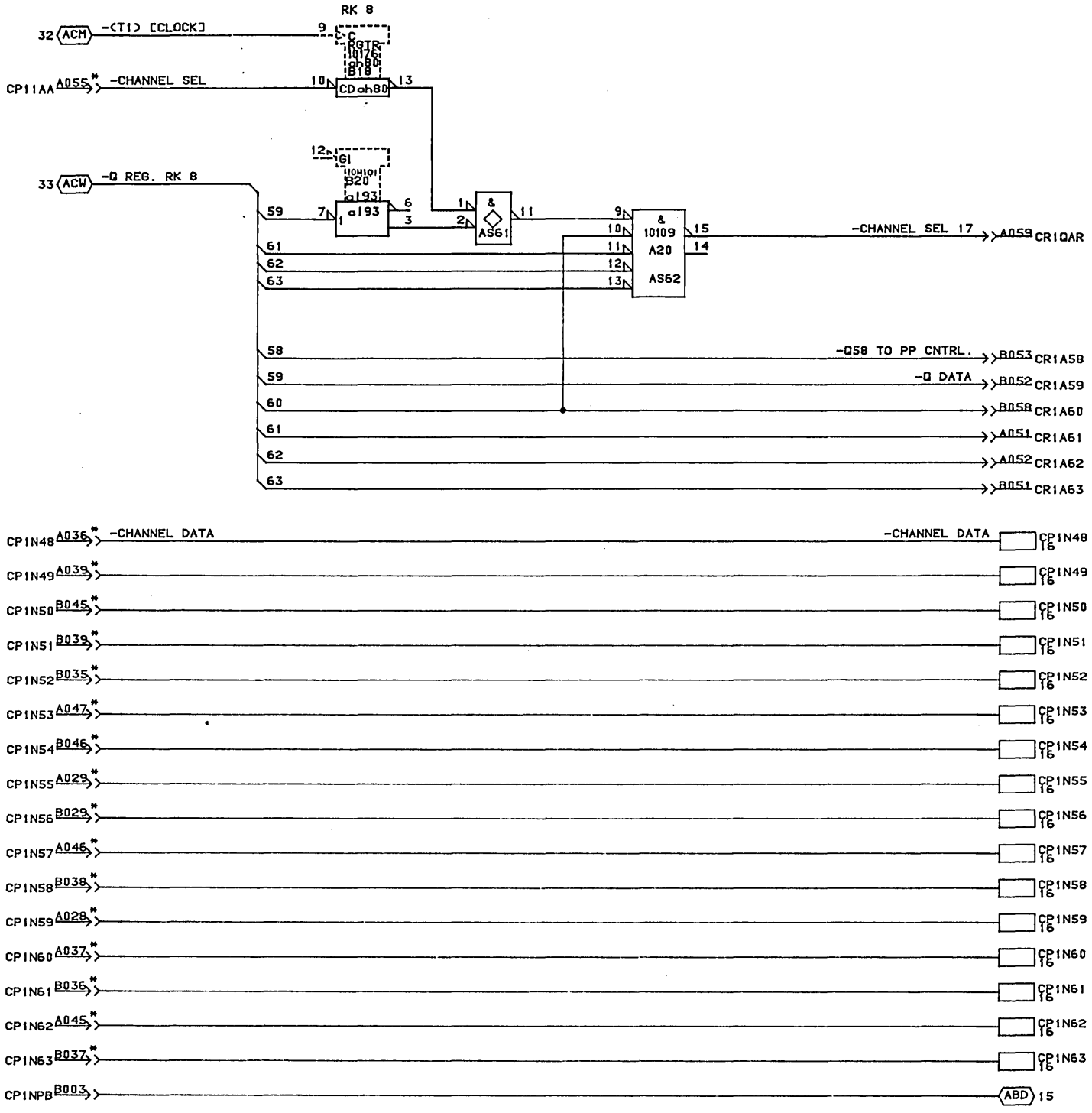

* NOTE: NO TERMINATION

CONTROL DATA CANADA LTD	CHANNEL DATA CHANNEL 17 SELECT MODULE ASSY:210 PAK TYPE: 1CR0	C		A
		19-JAN-84	SHEET26	LOC D12

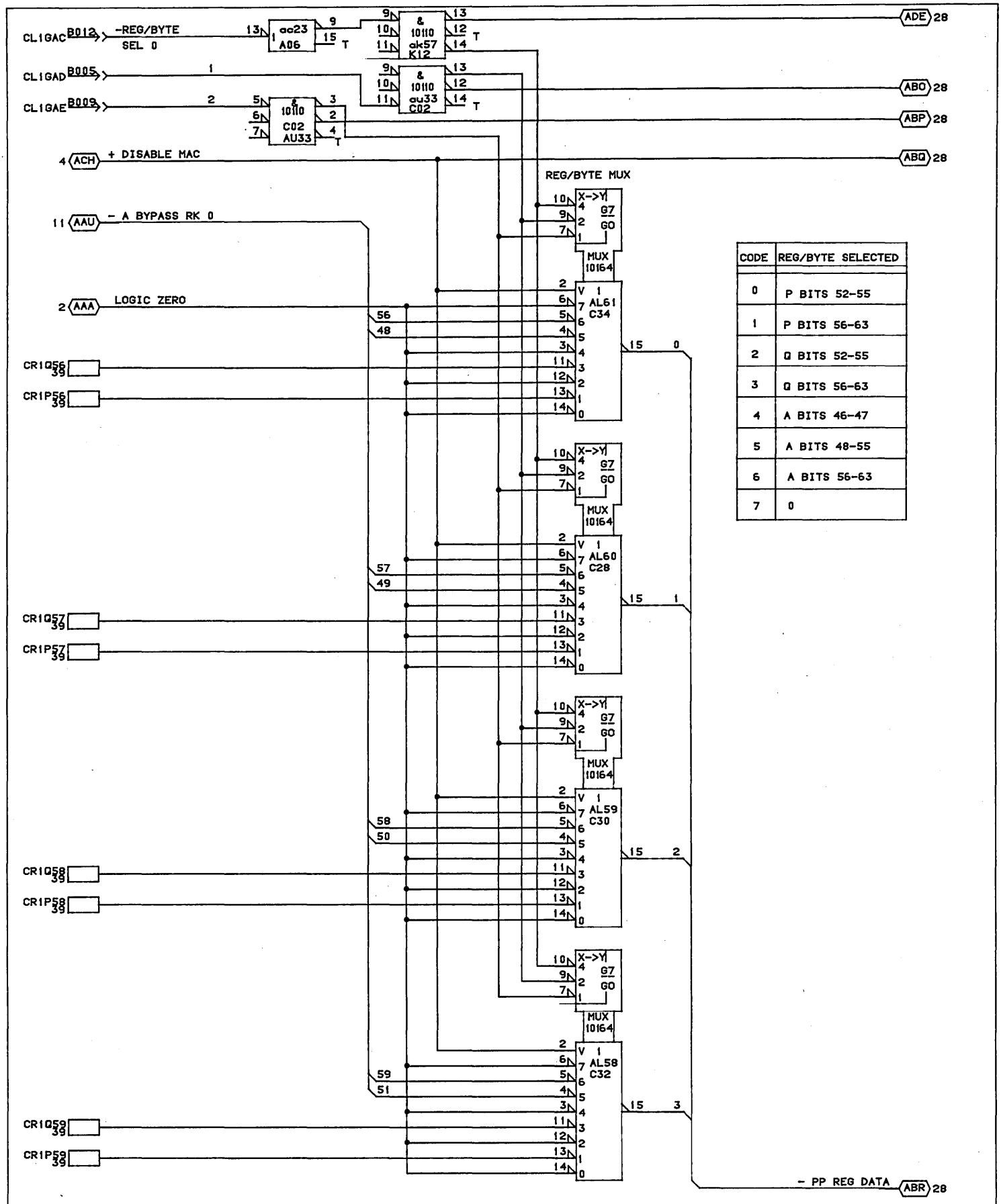

CODE	REG/BYTE SELECTED
0	P BITS 52-55
1	P BITS 56-63
2	Q BITS 52-55
3	Q BITS 56-63
4	A BITS 46-47
5	A BITS 48-55
6	A BITS 56-63
7	0

CONTROL DATA CANADA LTD	MAC REG/BYTE MUX MODULE ASSEMBLY -210 PAK TYPE: 1CR0	C		A
		19-JAN-84	SHEET27	LOC DI2

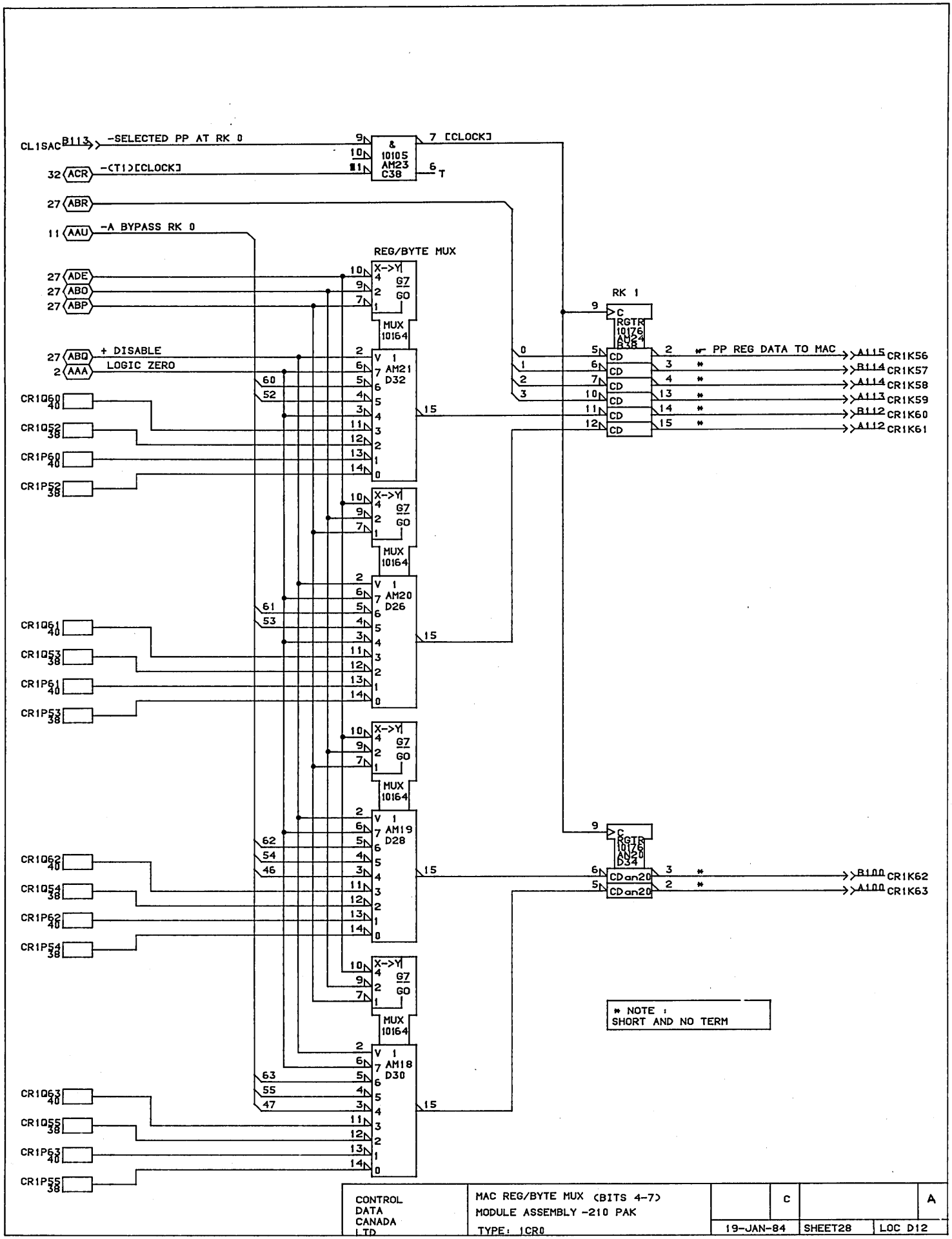
CL1SAC B113
-SELECTED PP AT RK 0
32 ACR
-(T1)[CLOCK]
& 10105 AM23 C38
7 [CLOCK]
6 T
27 ABR
11 AAU
-A BYPASS RK 0
REG/BYTE MUX
27 ADE
27 ABO
27 ABP
27 ABQ
+ DISABLE
2 AAA
LOGIC ZERO
X->Y
G7
G0
MUX 10164
V 1
AM21 D32
AM20 D26
AM19 D28
AM18 D30
CR1Q60 40
CR1Q52 38
CR1P60 40
CR1P52 38
CR1Q61 40
CR1Q53 38
CR1P61 40
CR1P53 38
CR1Q62 40
CR1Q54 38
CR1P62 40
CR1P54 38
CR1Q63 40
CR1Q55 38
CR1P63 40
CR1P55 38
RK 1
C
RGTR 10176 AM24 B38
CD
PP REG DATA TO MAC
A115 CR1K56
B114 CR1K57
A114 CR1K58
A113 CR1K59
B112 CR1K60
A112 CR1K61
RGTR 10176 AM20 D34
CDan20
B100 CR1K62
A100 CR1K63
* NOTE :
SHORT AND NO TERM
CONTROL DATA CANADA LTD
MAC REG/BYTE MUX (BITS 4-7)
MODULE ASSEMBLY -210 PAK
TYPE: 1CR0
C
A
19-JAN-84
SHEET28
LOC D12

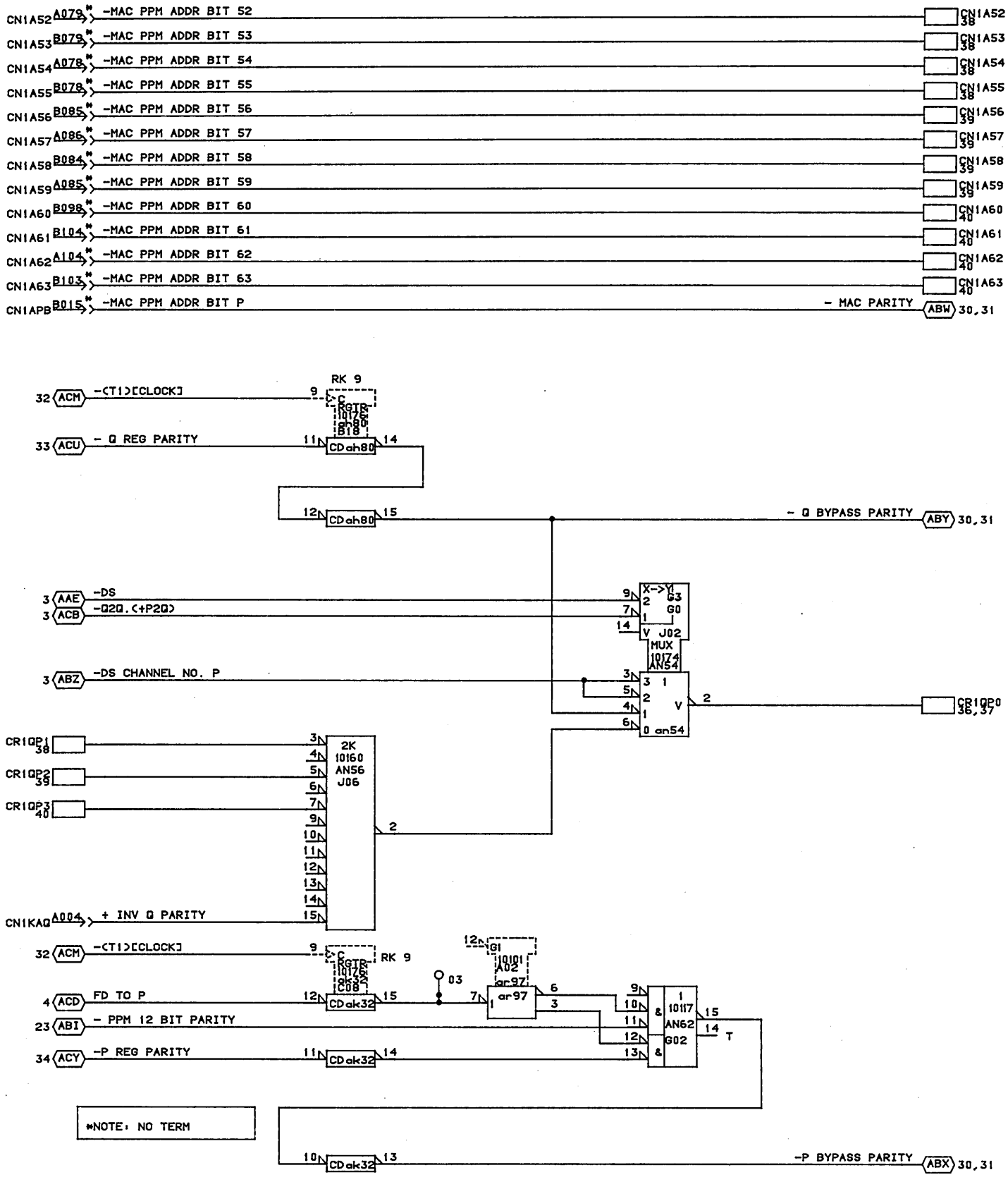

CONTROL DATA CANADA LTD	Q PARITY GENERATOR MODULE ASSEMBLY -210 PAK TYPE: 1CR0	C		A
		19-JAN-84	SHEET 29	LOC D12

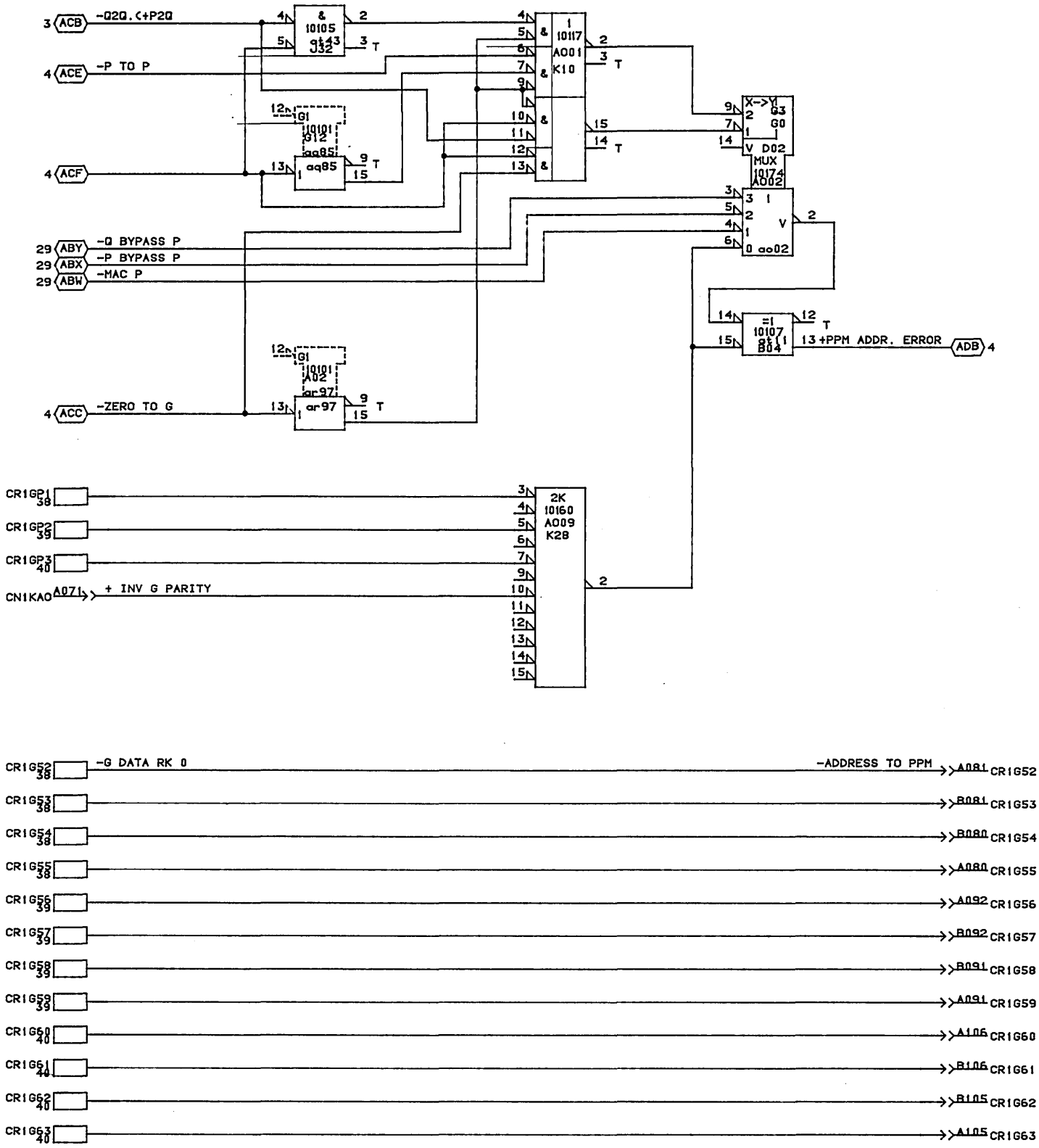

CONTROL DATA CANADA LTD	PPM ADDRESS CHECKER MODULE ASSEMBLY -210 PAK TYPE: 1CR0	C	A
		19-JAN-84	SHEET30 LOC D12

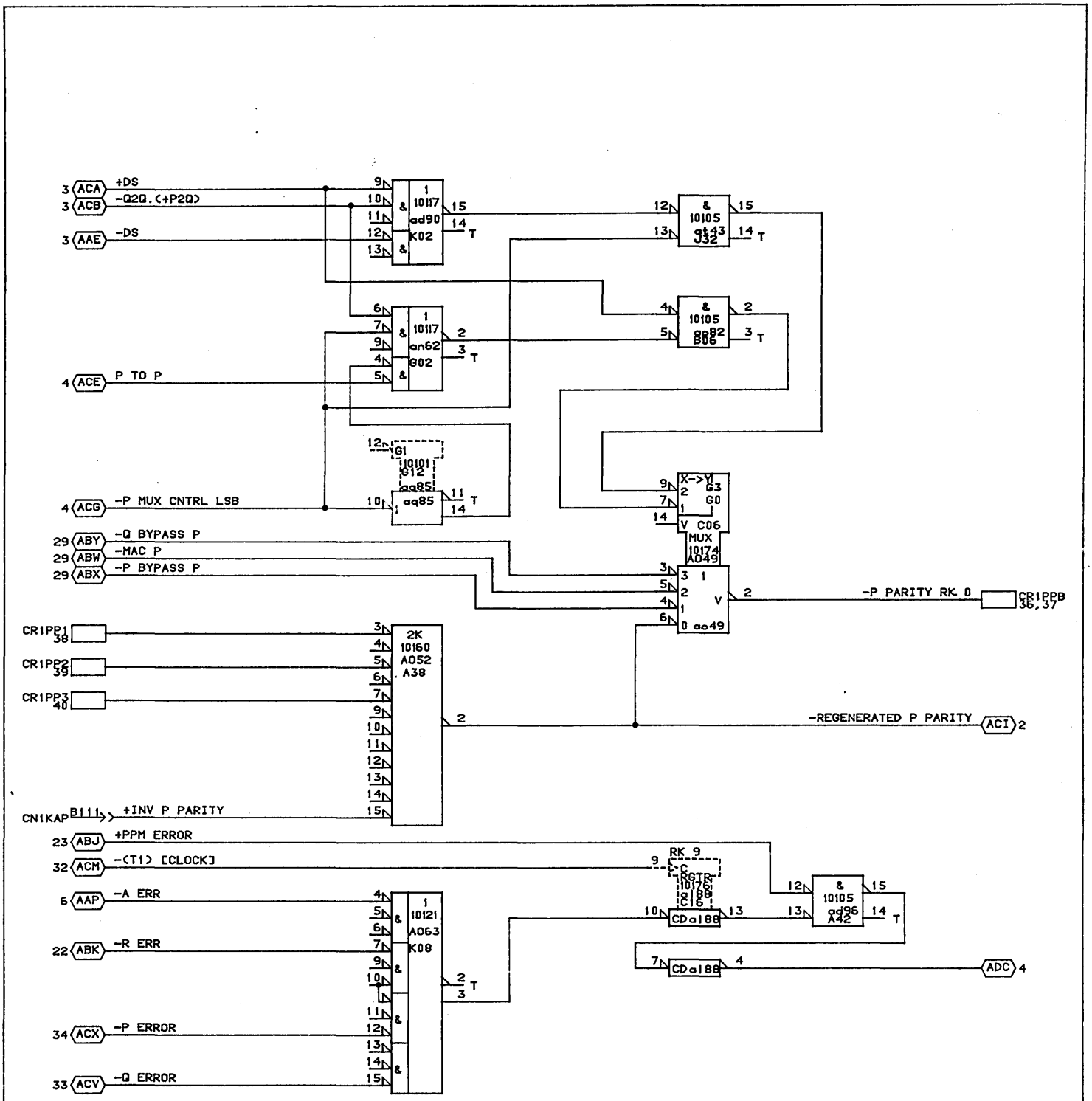

CONTROL DATA CANADA LTD	P PARITY GENERATOR CR ERROR SUMMARY MODULE ASSY:210 PAK TYPE: 1CR0	C		A
		19-JAN-84	SHEET 31	LOC D12

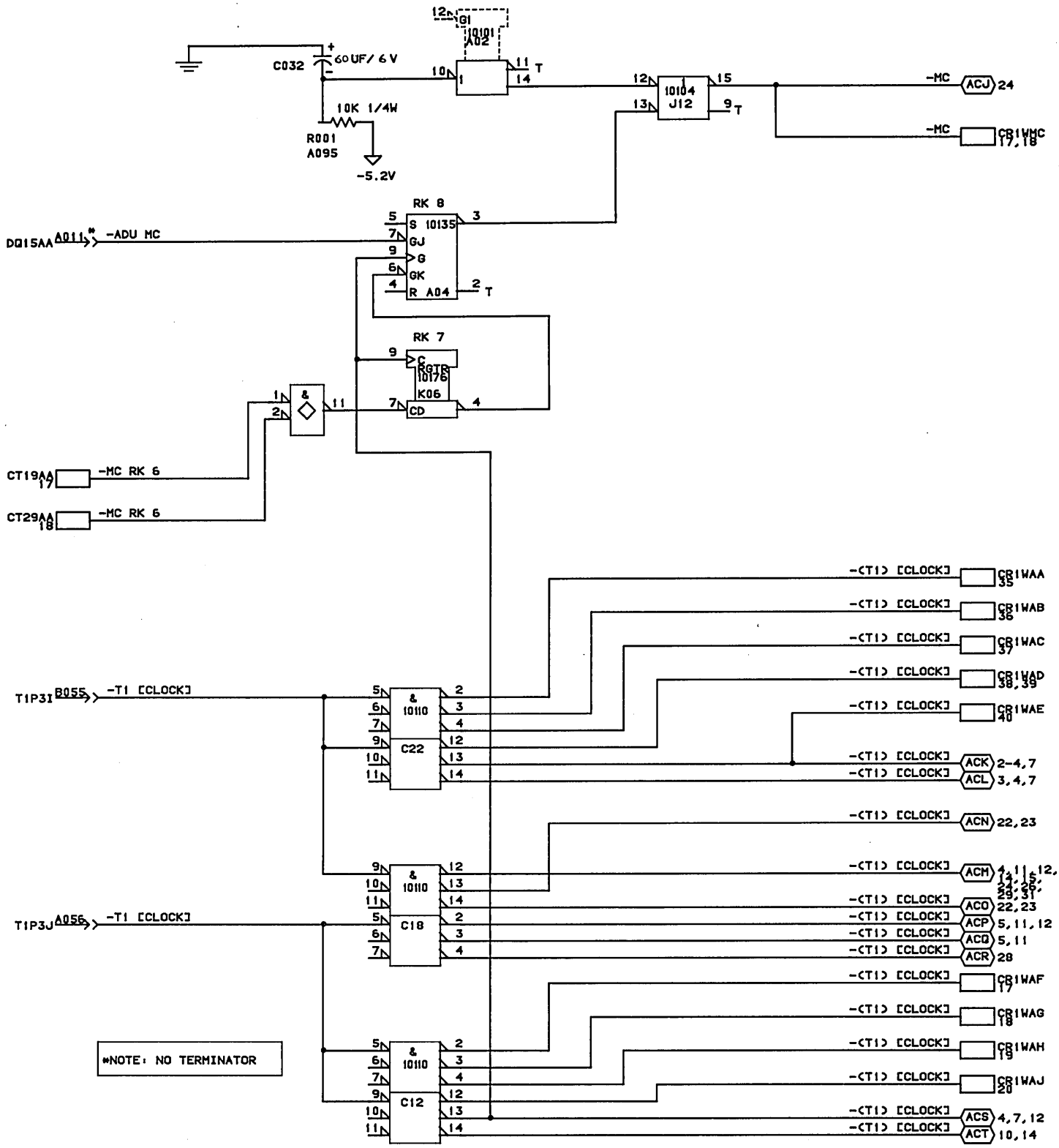

CONTROL DATA CANADA LTD	POWER ON MC CLOCK F/O MODULE ASSY:210 PAK TYPE: 1CR0		C	A
		30-JAN-84	SHEET 32	LOC D12

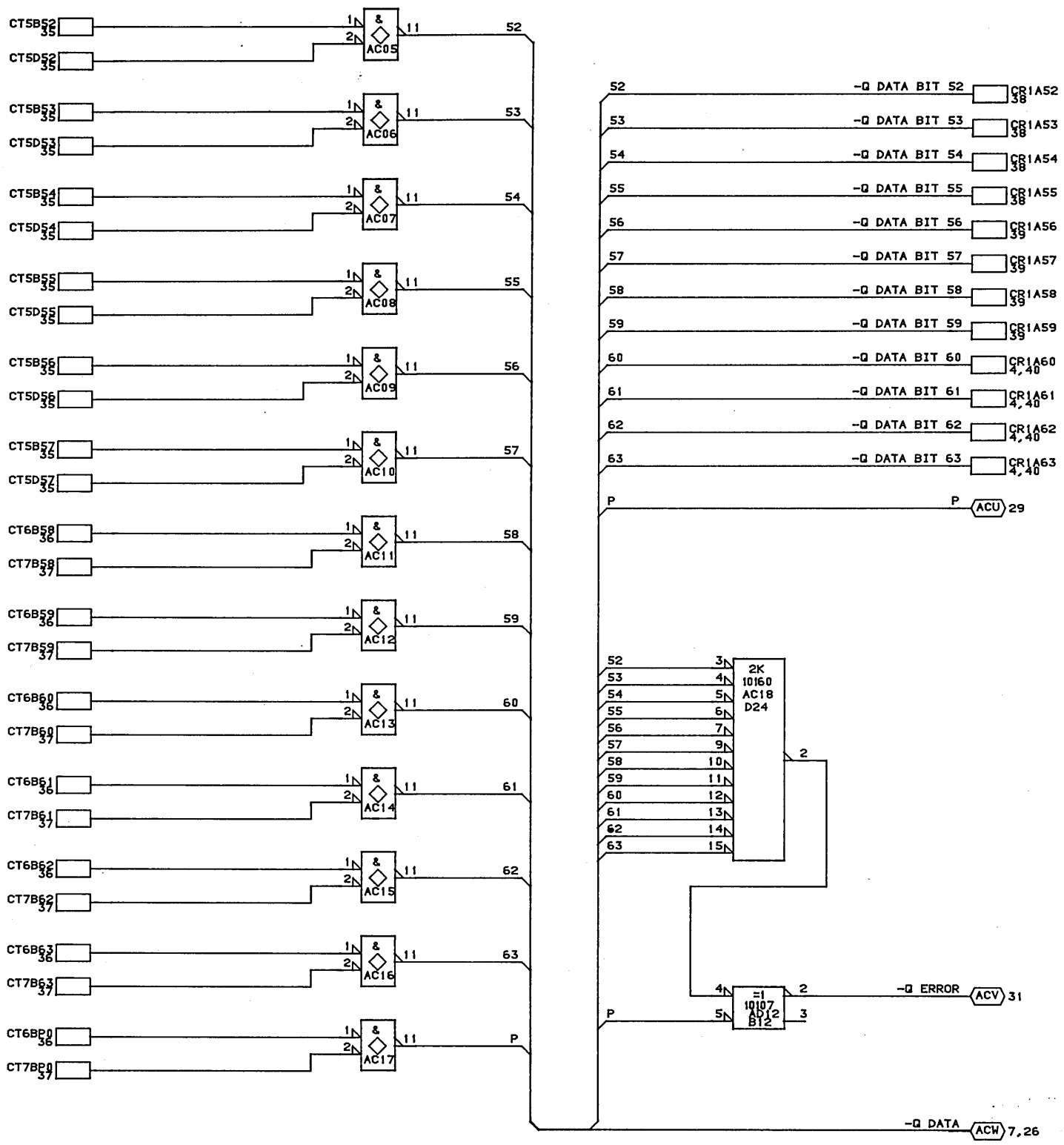

CONTROL DATA CANADA LTD	Q REG ASSEMBLY MODULE ASSEMBLY -210 PAK TYPE: 1CR0	C		A
		20-JAN-84	SHEET 33	LOC D12

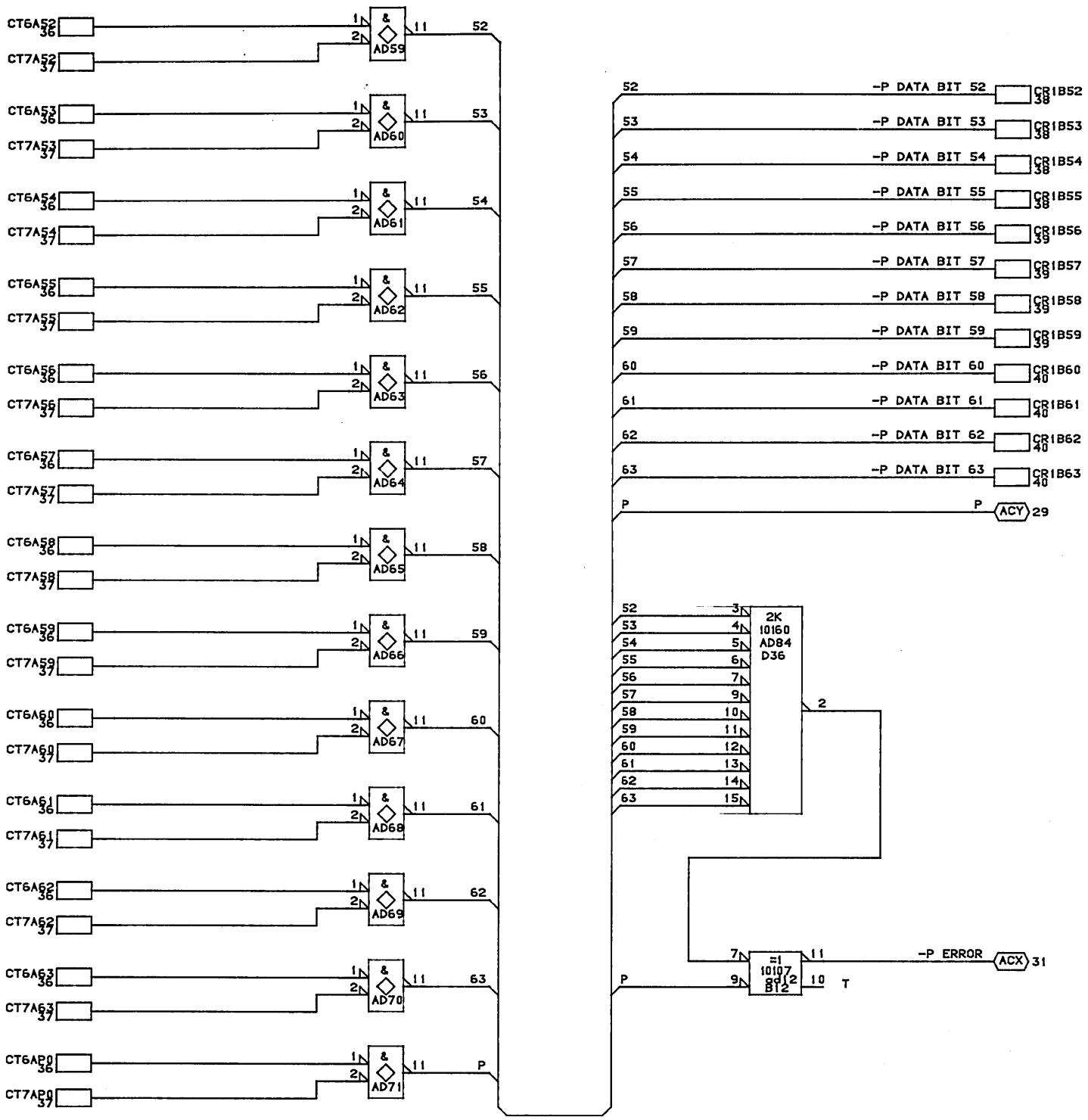

CONTROL DATA CANADA LTD	P REG ASSEMBLY MODULE ASSEMBLY - 210 PAK TYPE: 1CR0	C		A
		19-JAN-84	SHEET 34	LOC. D12

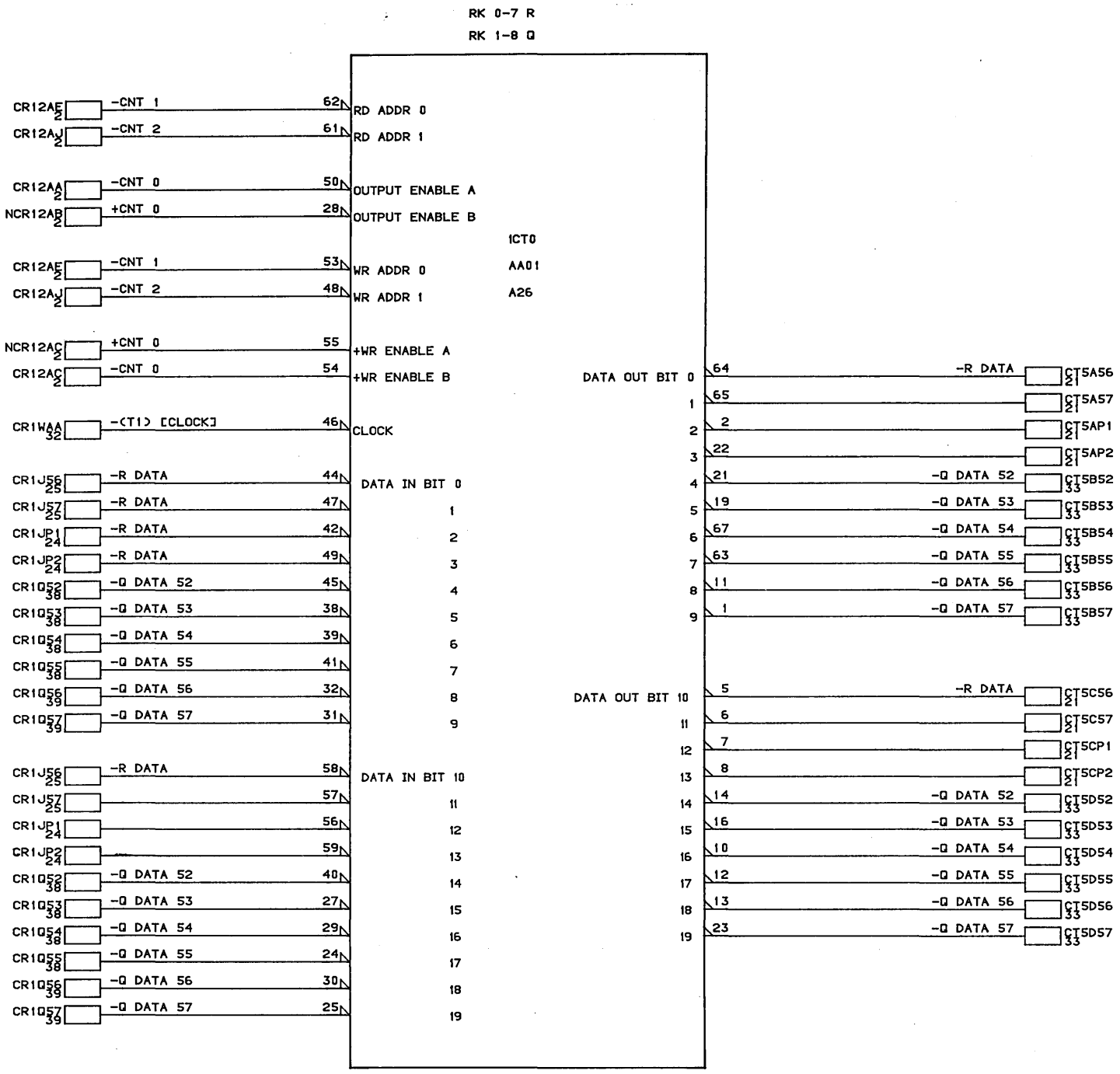

CONTROL DATA CANADA LTD	R BARREL (BITS 56,57, P1,P2) Q BARREL (BITS 52-57) MODULE ASSEMBLY - 210 PAK TYPE: 1CR0	C		A
		20-JAN-84	SHEET 35	LOC. D12

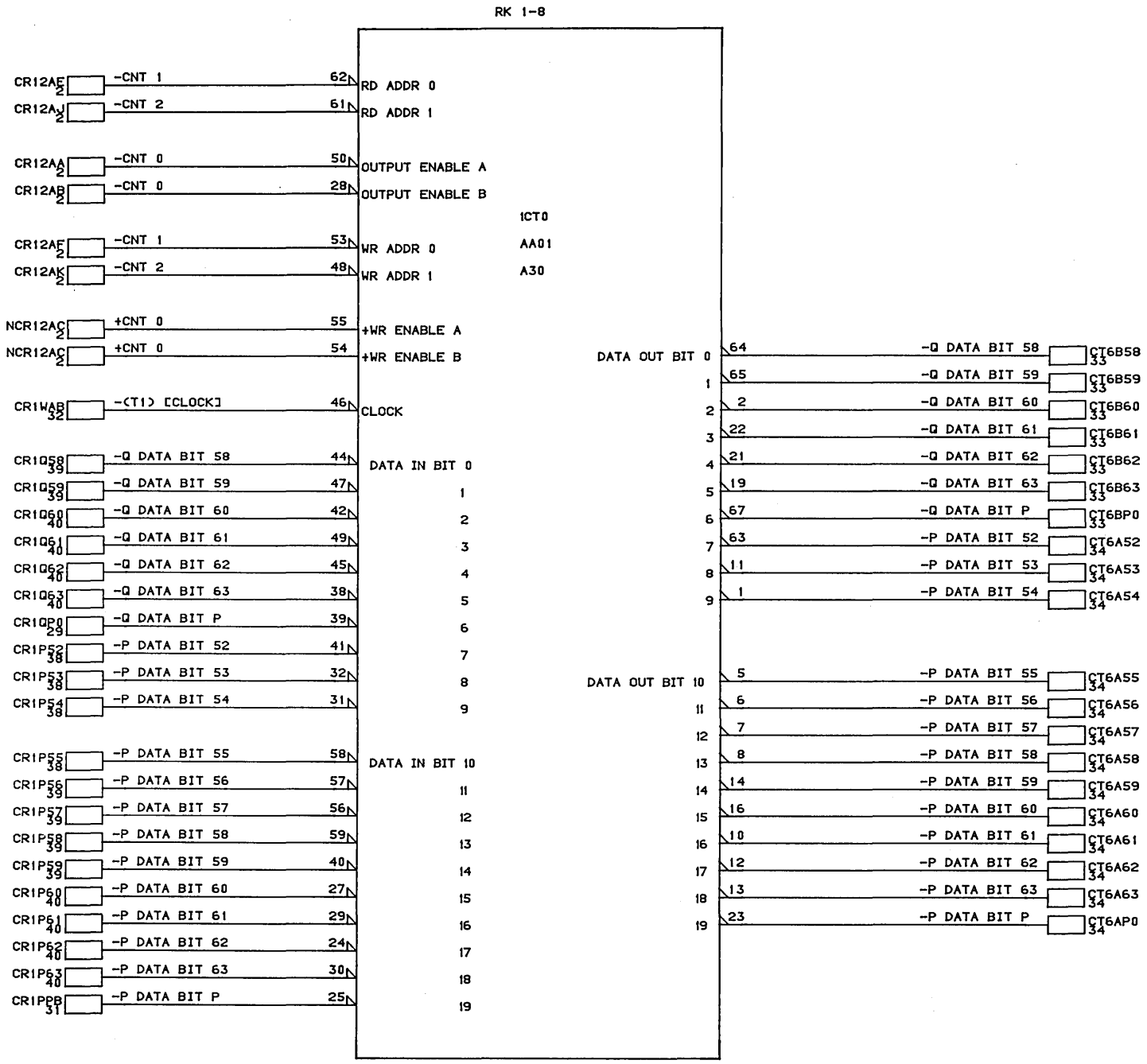

CONTROL DATA CANADA LTD	P BARREL CHIP 1 MODULE ASSEMBLY - 210 PAK TYPE: 1CR0	C		A
		20-JAN-84	SHEET 36	LOC. D12

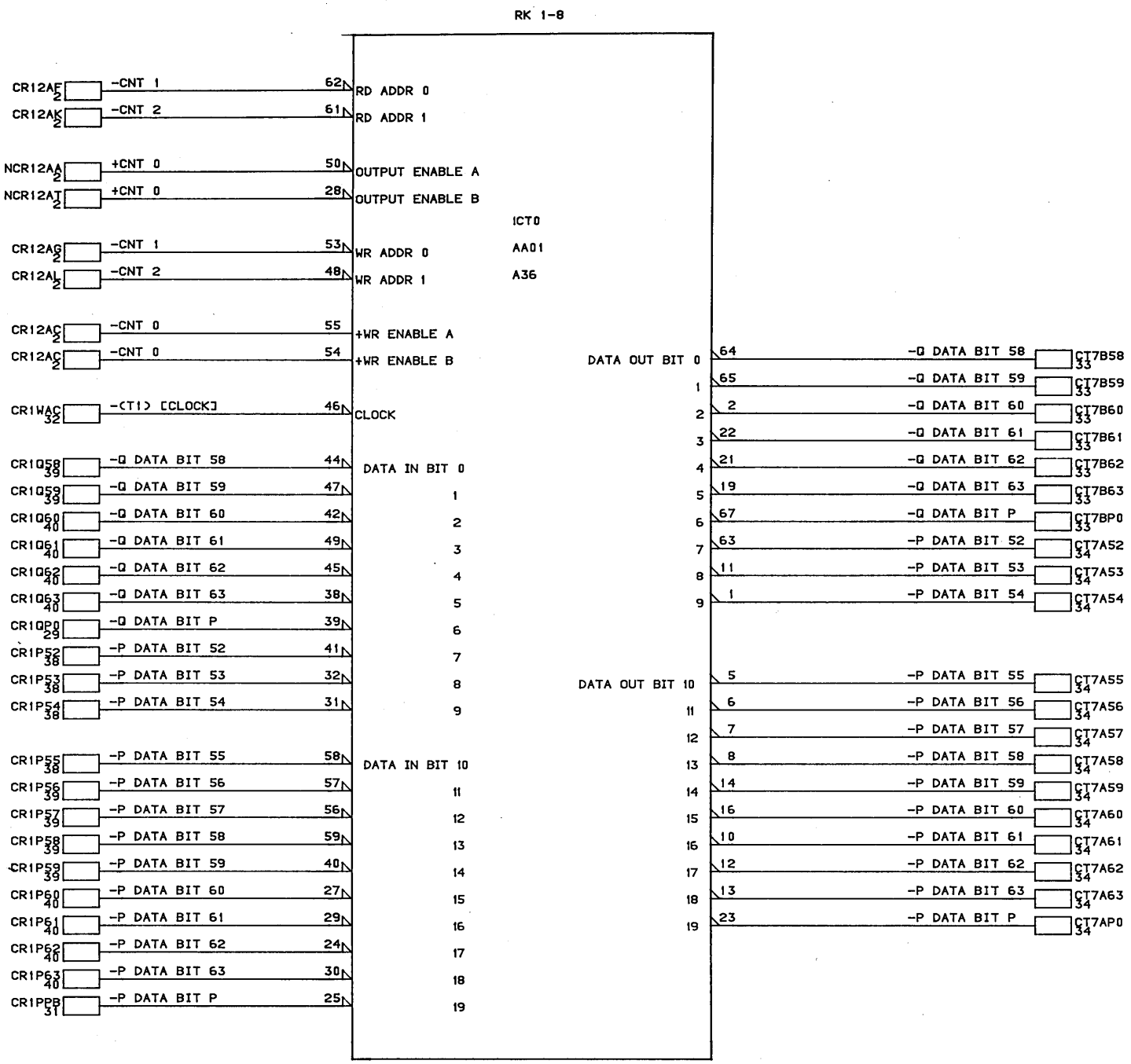

CONTROL DATA CANADA LTD	Q BARREL (BITS 58-63,P) P BARREL CHIP 2 MODULE ASSEMBLY - 210 PAK TYPE: 1CR0	C		A
		20-JAN-84	SHEET 37	LOC. D12

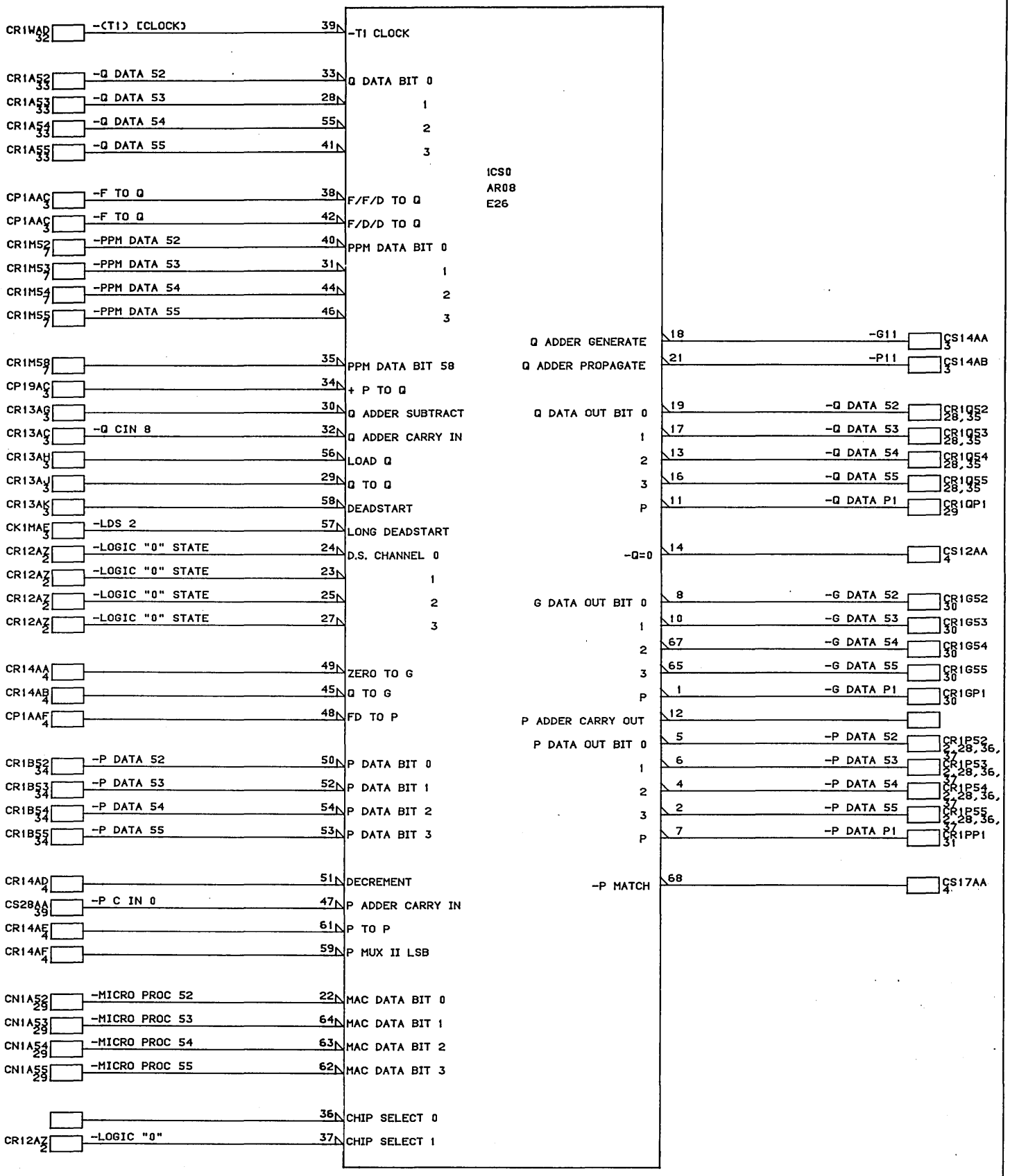

CONTROL DATA CANADA LTD	Q,P SLOT (BITS 52-55) MODULE ASSY:210 PAK TYPE: 1CR0	C		A
		20-JAN-84	SHEET 38	LOC D12

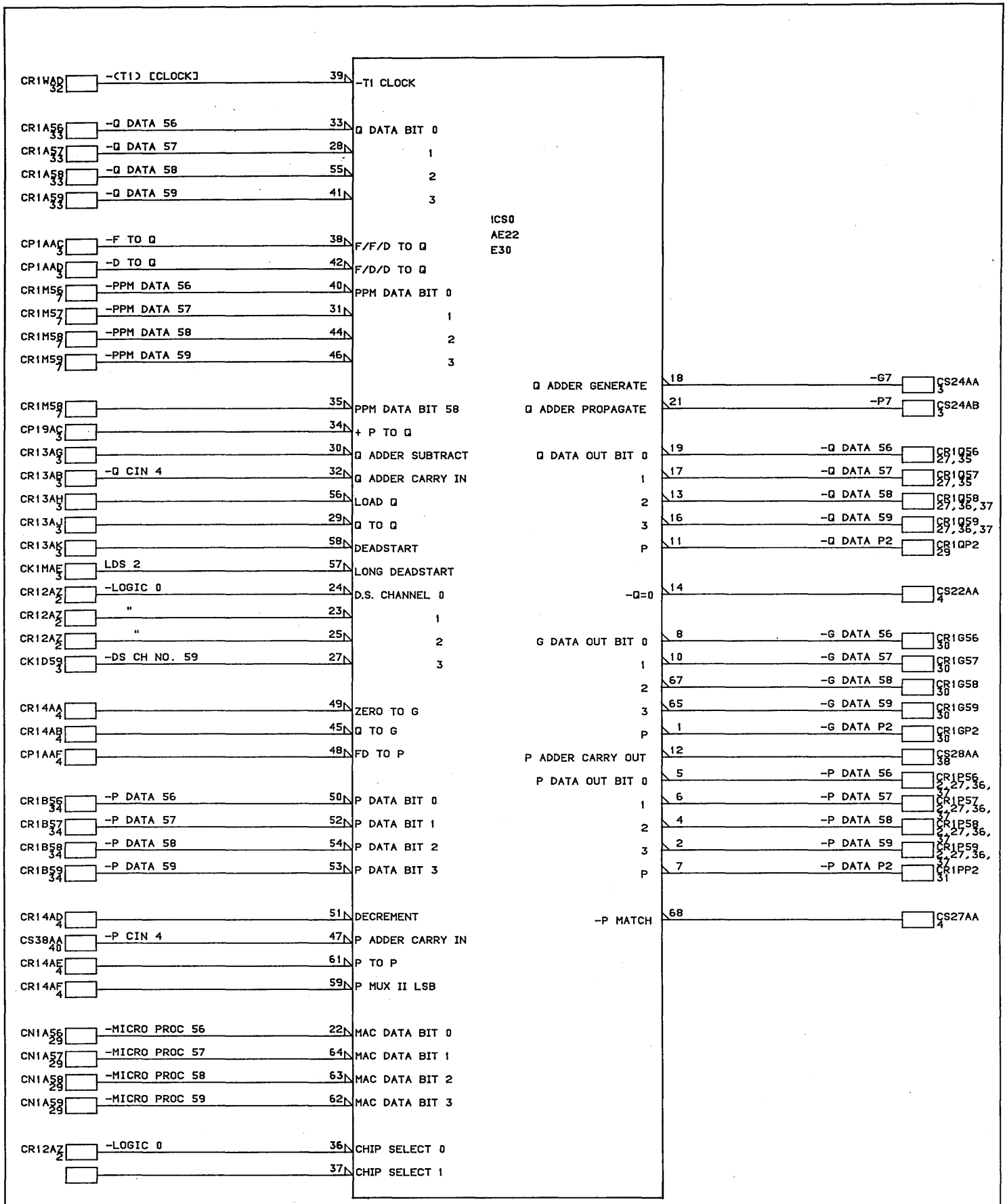

CONTROL DATA CANADA LTD	Q, P SLOT (BITS 56-59)	C		A
	MODULE ASSEMBLY - 210 PAK TYPE: 1CR0	20-JAN-84	SHEET 39	LOC. D12

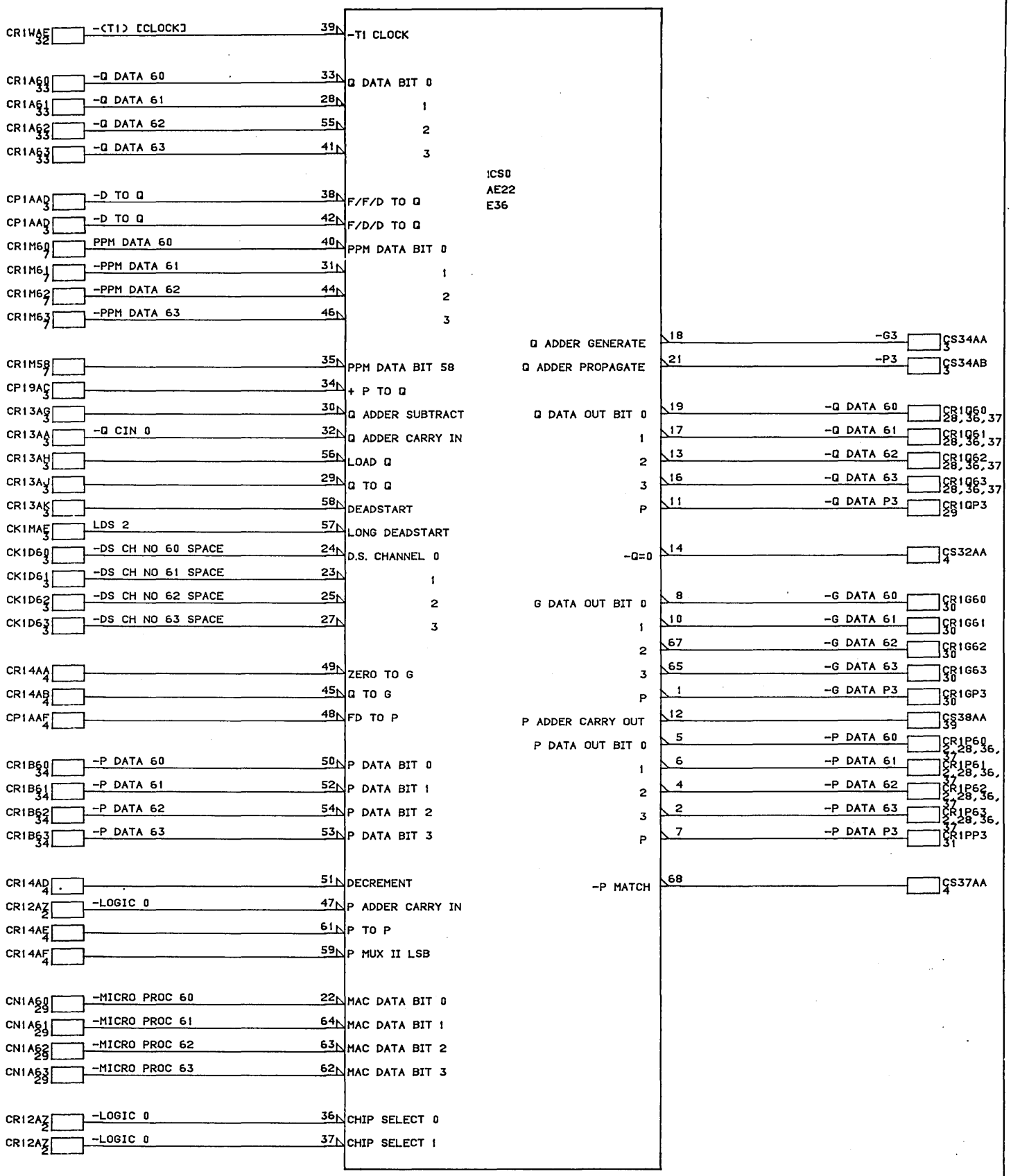

CONTROL DATA CANADA LTD	Q,P SLOT (BITS 60-63)	C		A
	MODULE ASSEMBLY - 210 PAK TYPE: ICR0	20-JAN-84	SHEET 40	LOC. D12

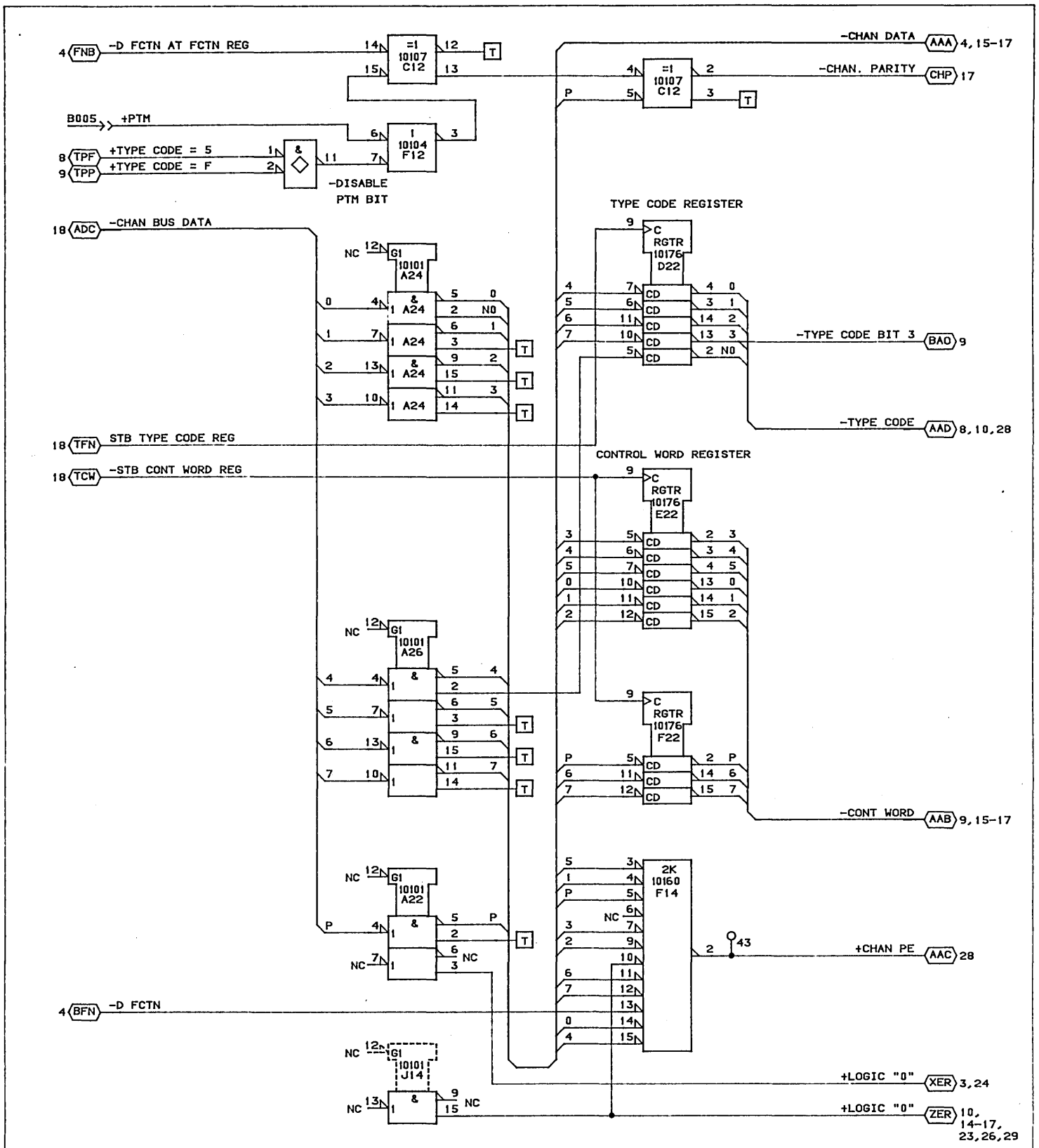

CONTROL DATA CANADA LTD	1DQ0 BI-DIRECTIONAL CHANNEL BUS RECEIVER	C		B
		29-MAR-85	SHEET 02	

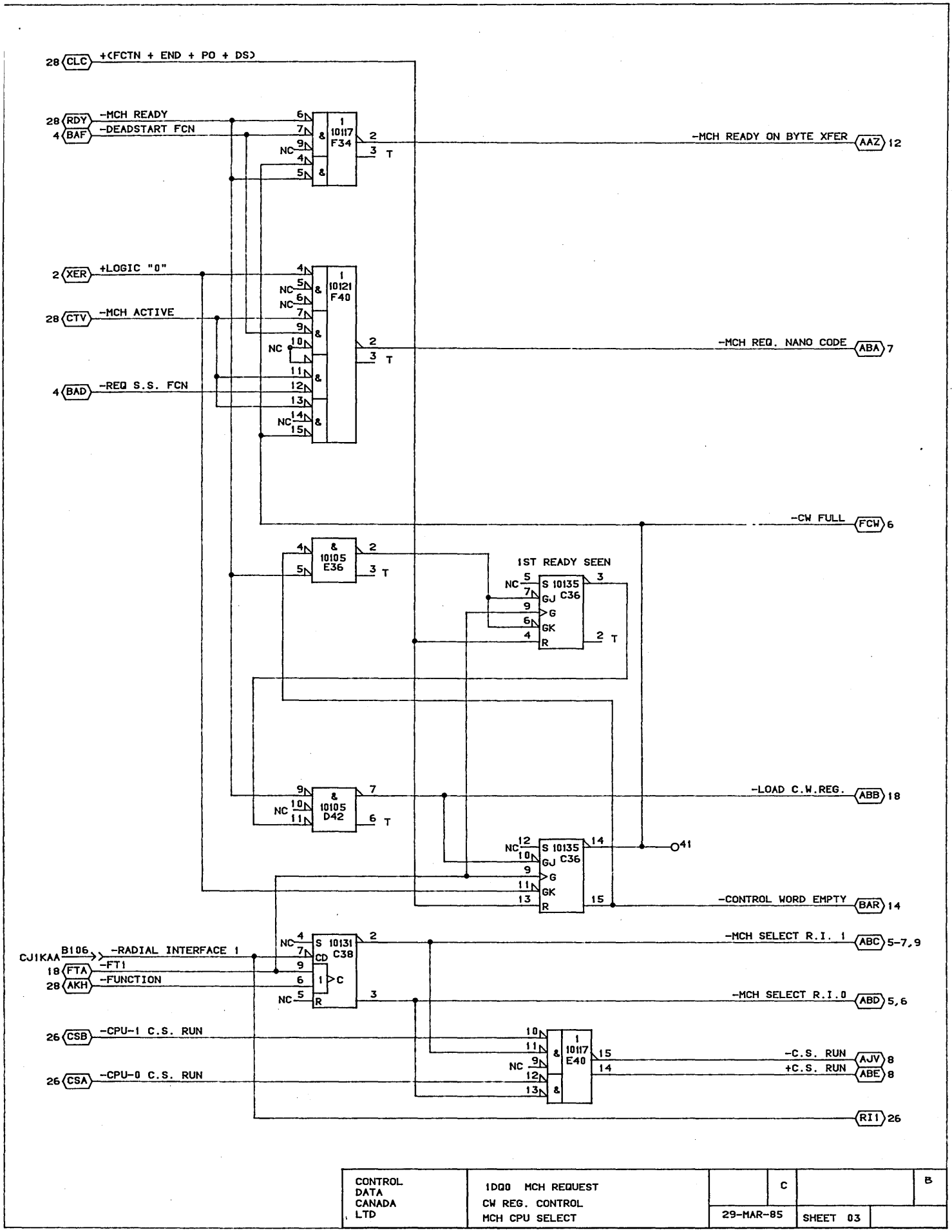

CONTROL DATA CANADA LTD	1D00 MCH REQUEST CW REG. CONTROL MCH CPU SELECT	C		B
		29-MAR-85	SHEET 03	

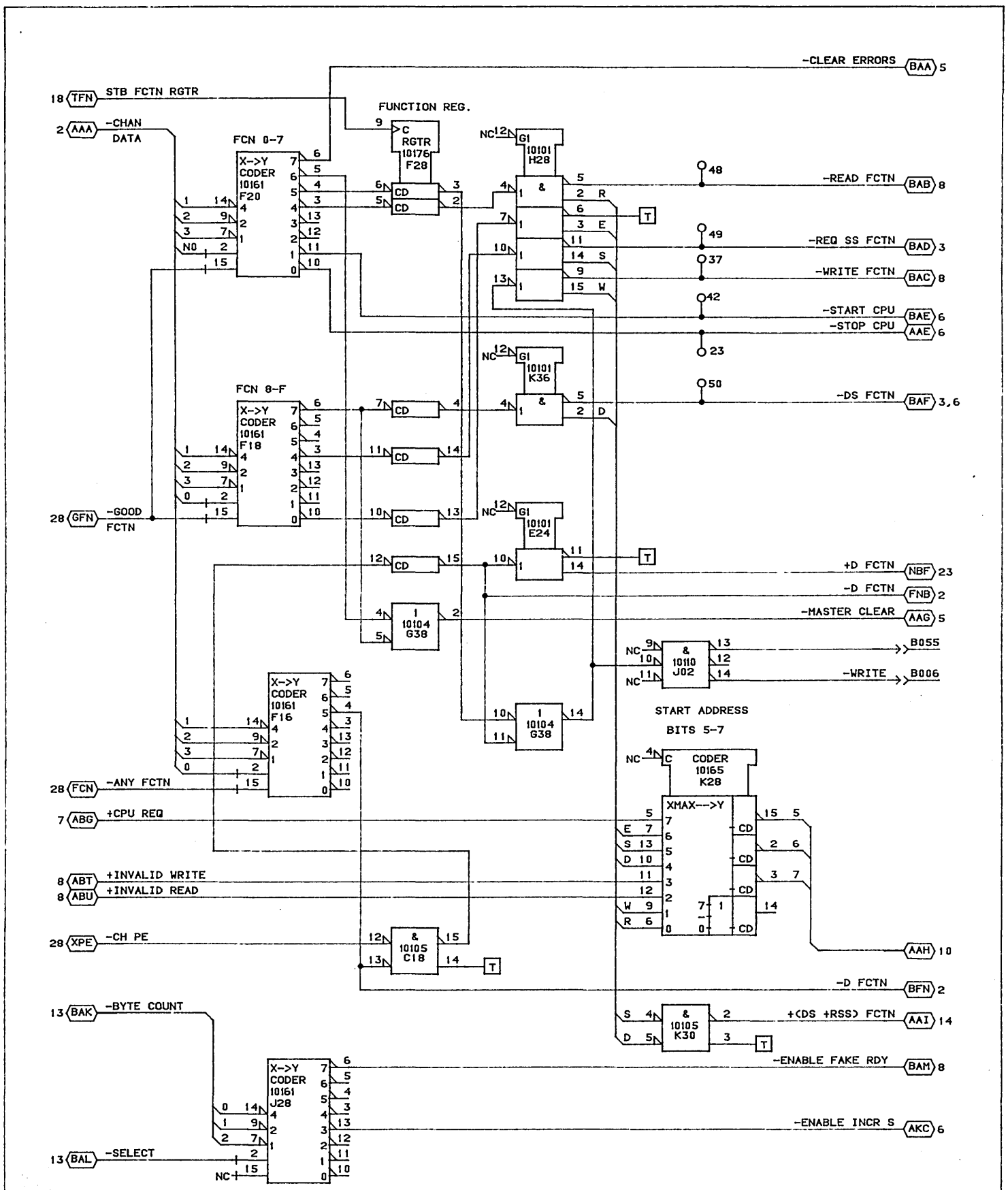

CONTROL DATA CANADA LTD	1DQ0 FUNCTION DECODE STARTING ADDRESS FORMATION	C		B
		29-MAR-85	SHEET 04	

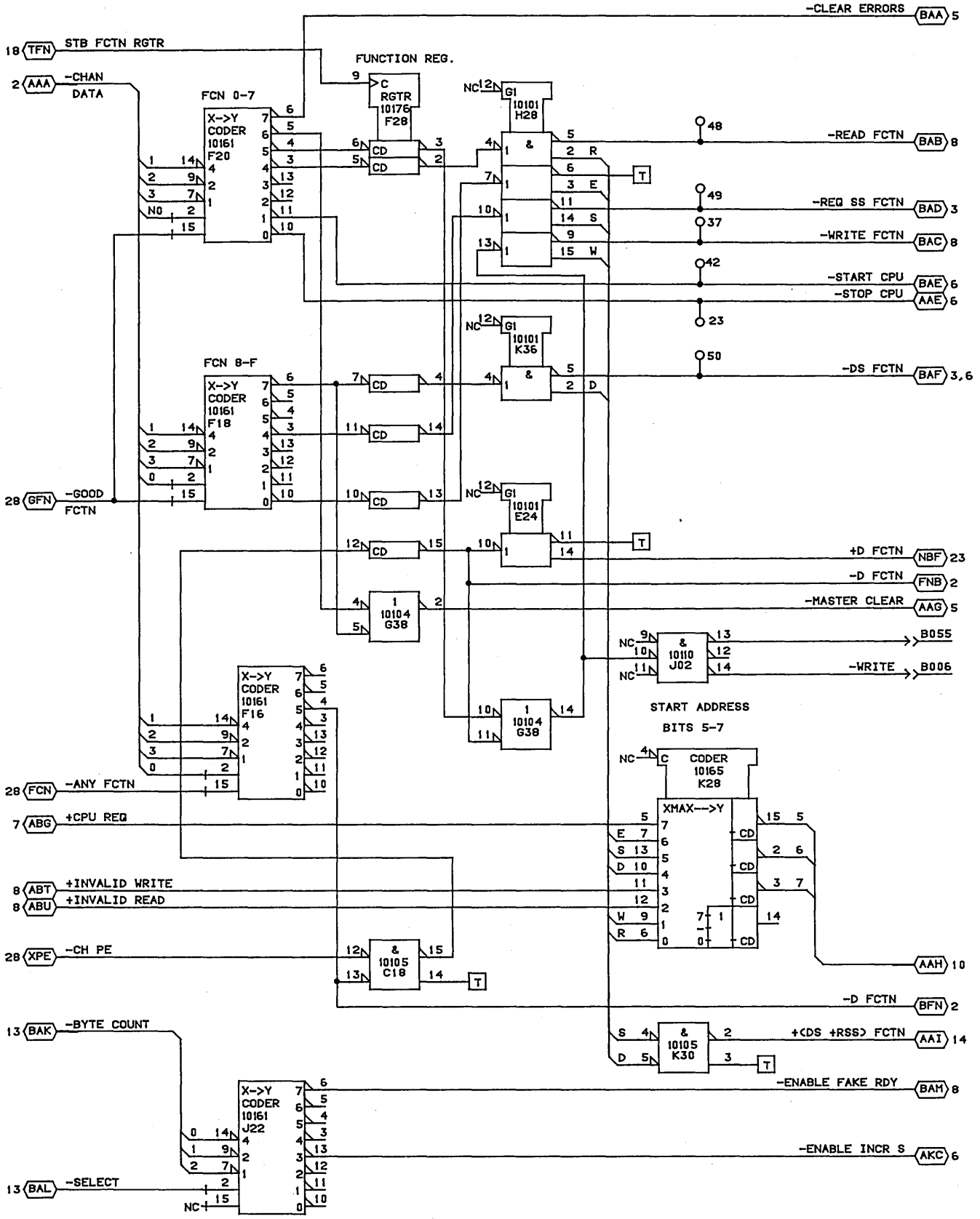

NOTE: THIS DRAWING IS APPLICABLE TO PWB 19268383 ONLY.

CONTROL DATA CANADA LTD	1DQ0 FUNCTION DECODE STARTING ADDRESS FORMATION	C		B
		29-MAR-85	SHEET 04A	

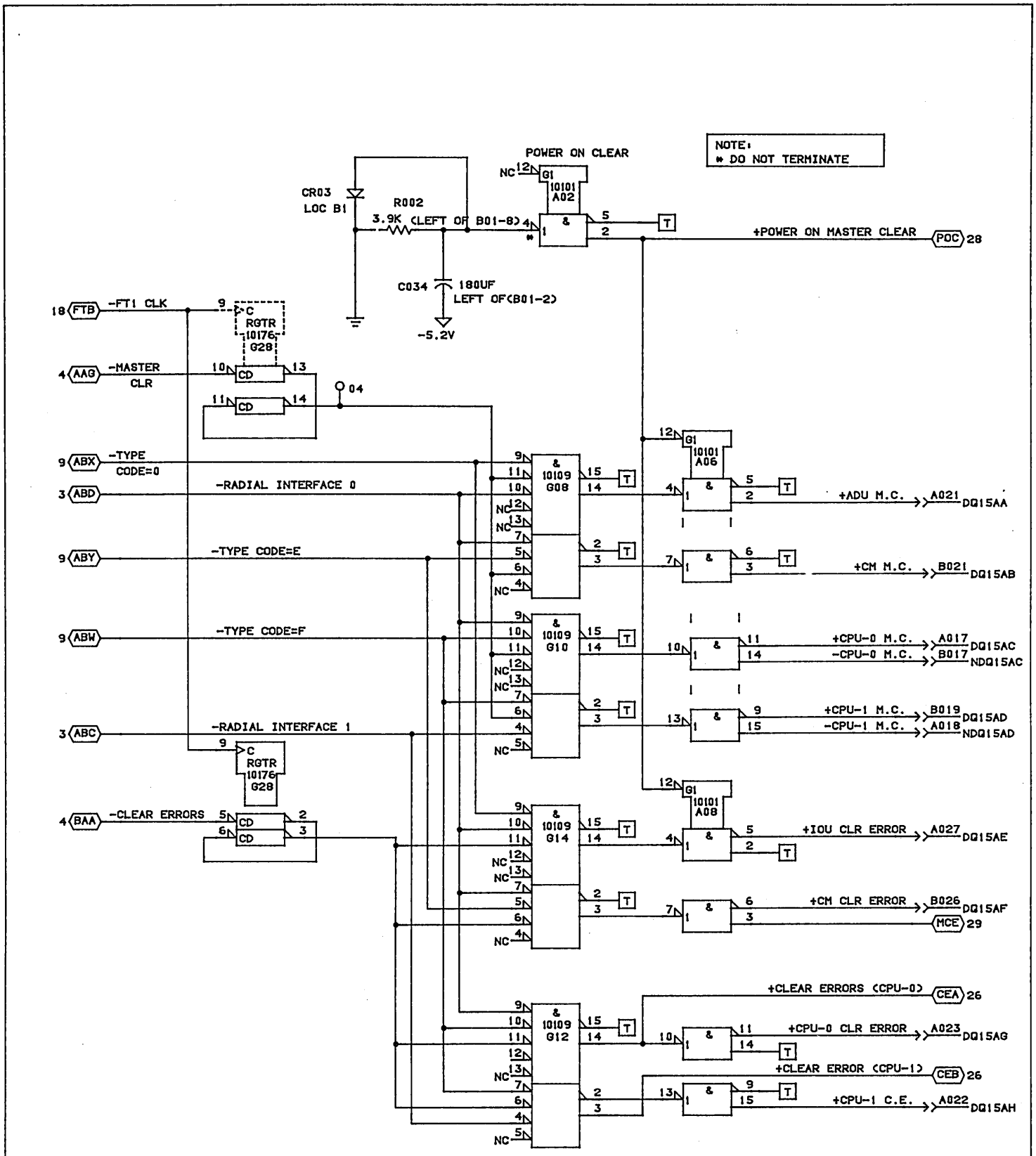

CONTROL DATA CANADA LTD	1DQ0 MASTER CLEAR'S CLEAR ERRORS	C		B
		23-APR-85	SHEET 05	

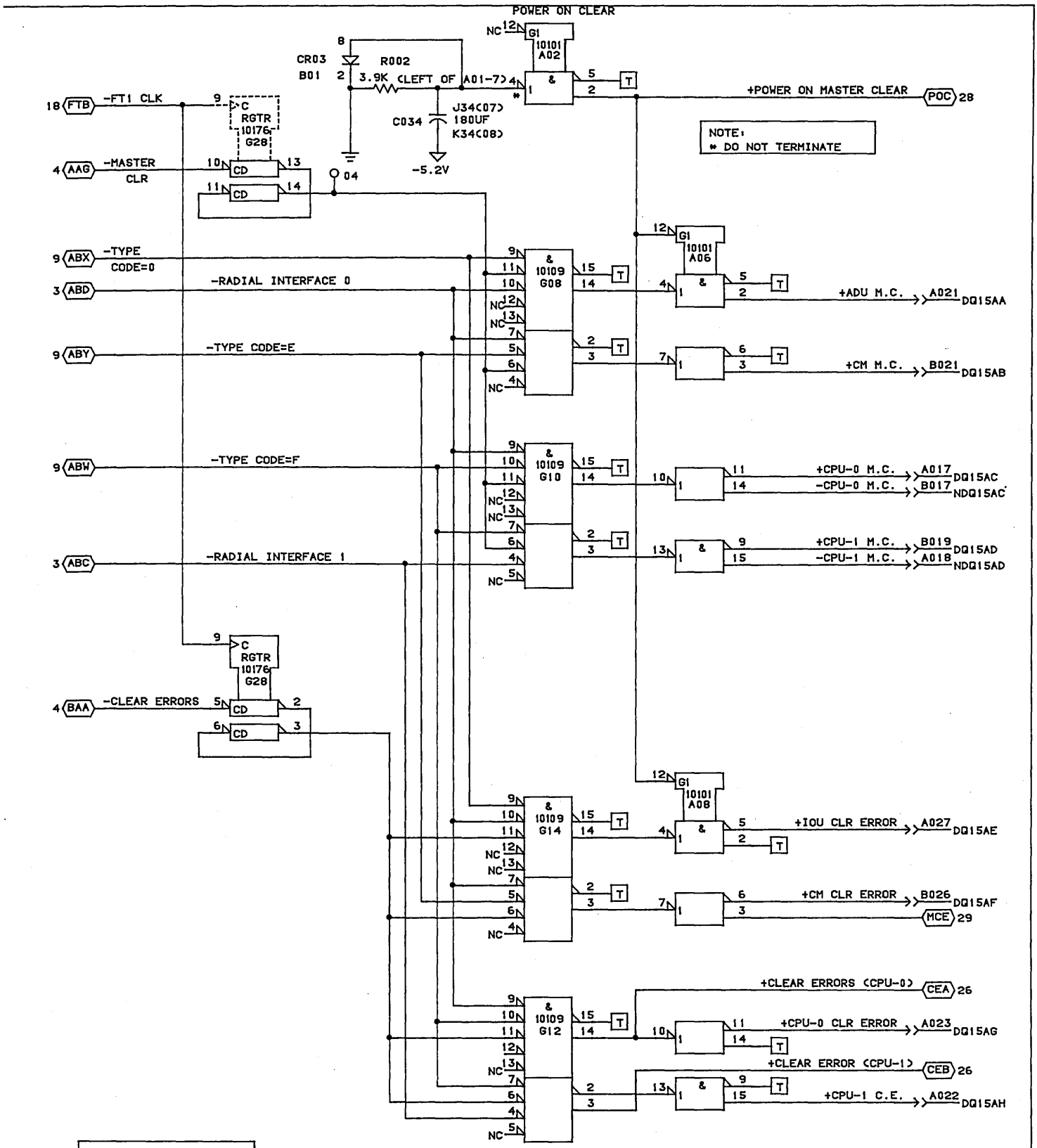

CONTROL DATA CANADA LTD	1DQ0 MASTER CLEAR'S CLEAR ERRORS	C		B
		29-MAR-85	SHEET 05A	

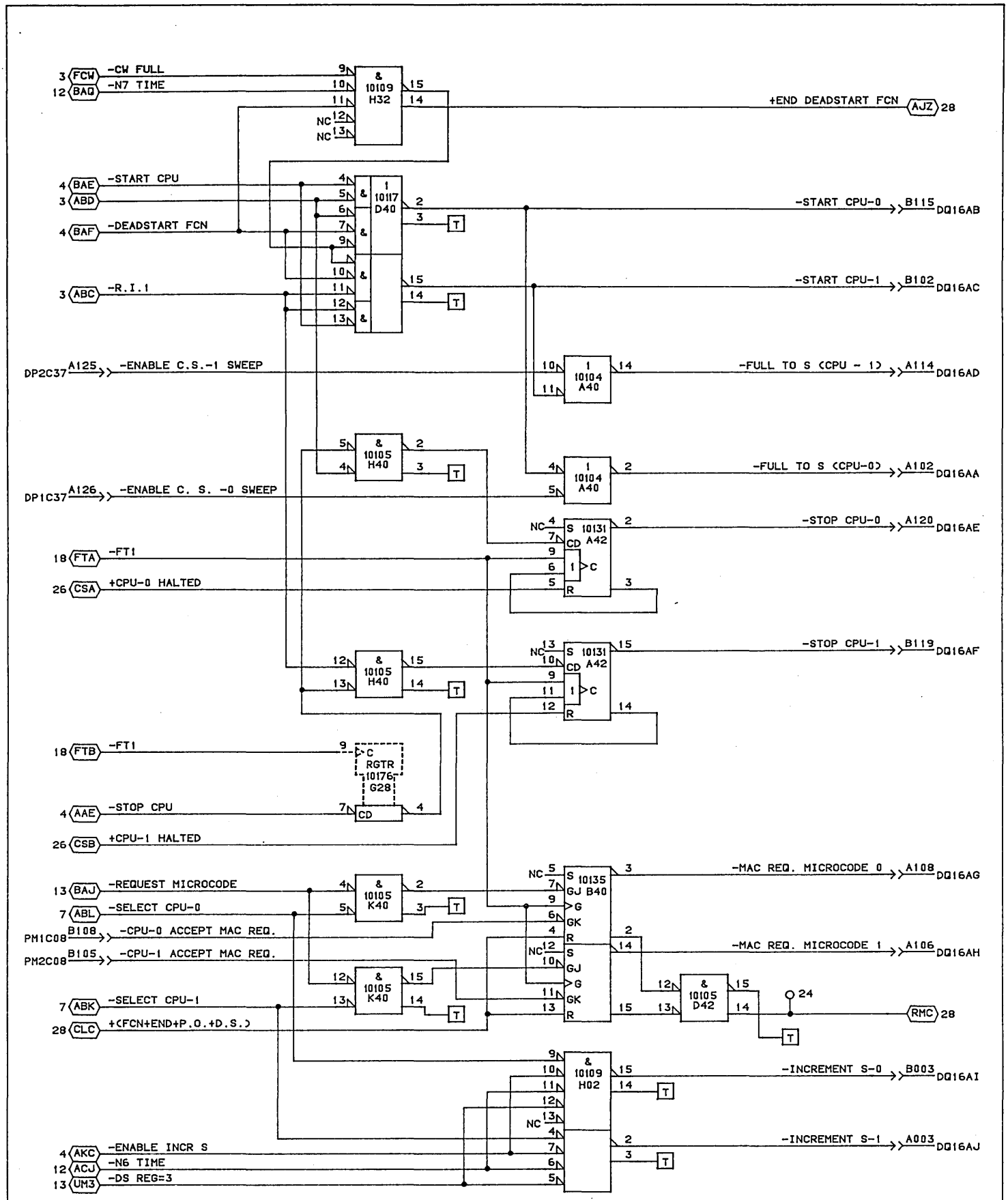

CONTROL DATA CANADA LTD	1DQ0 START/STOP CPU MAC REQUEST C.S.	C		B
		23-APR-85	SHEET 06	

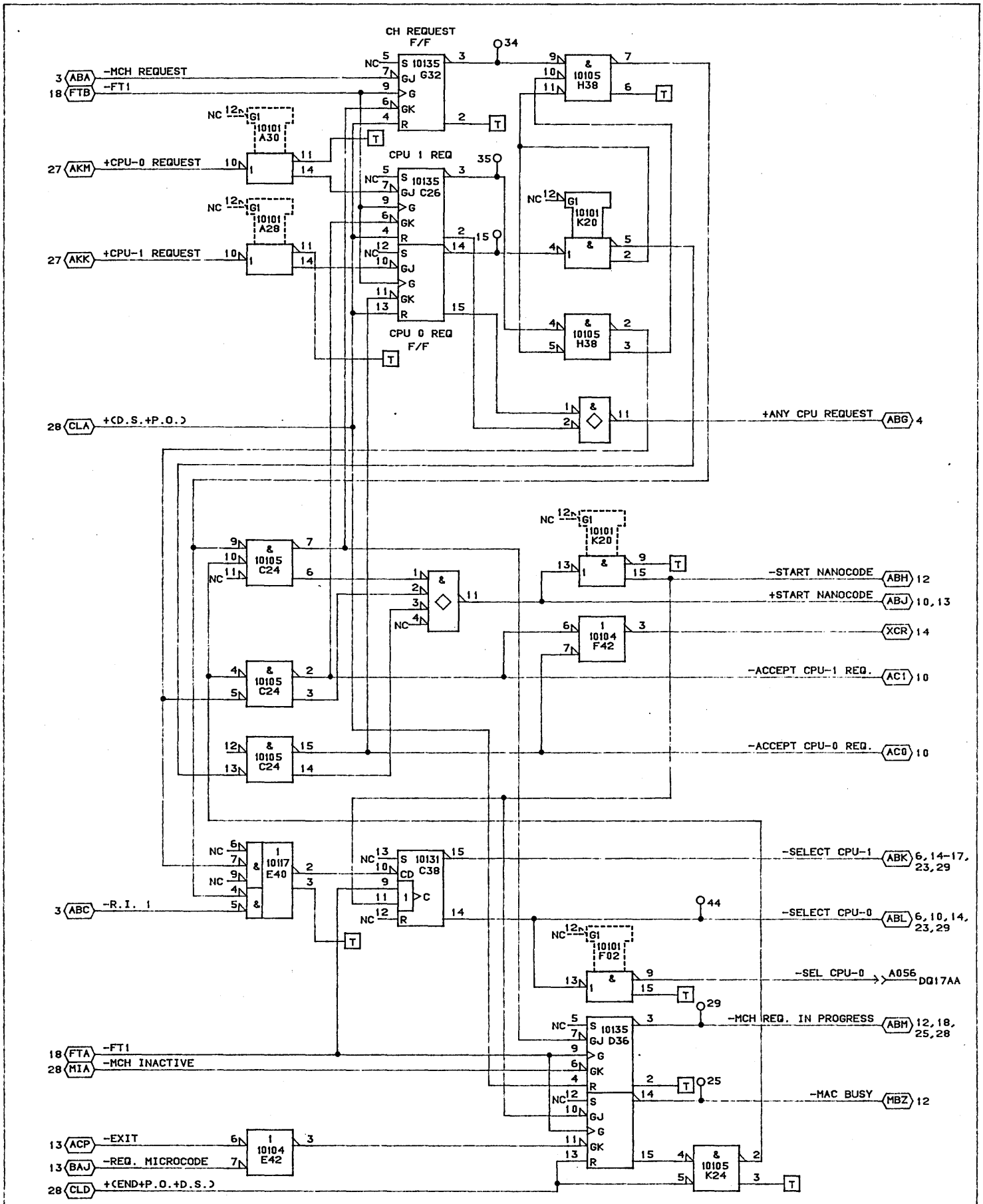

CONTROL DATA CANADA LTD	1DQ0 NANOCODE REQUEST CIRCUITRY	C		B
		29-MAR-85	SHEET 07	

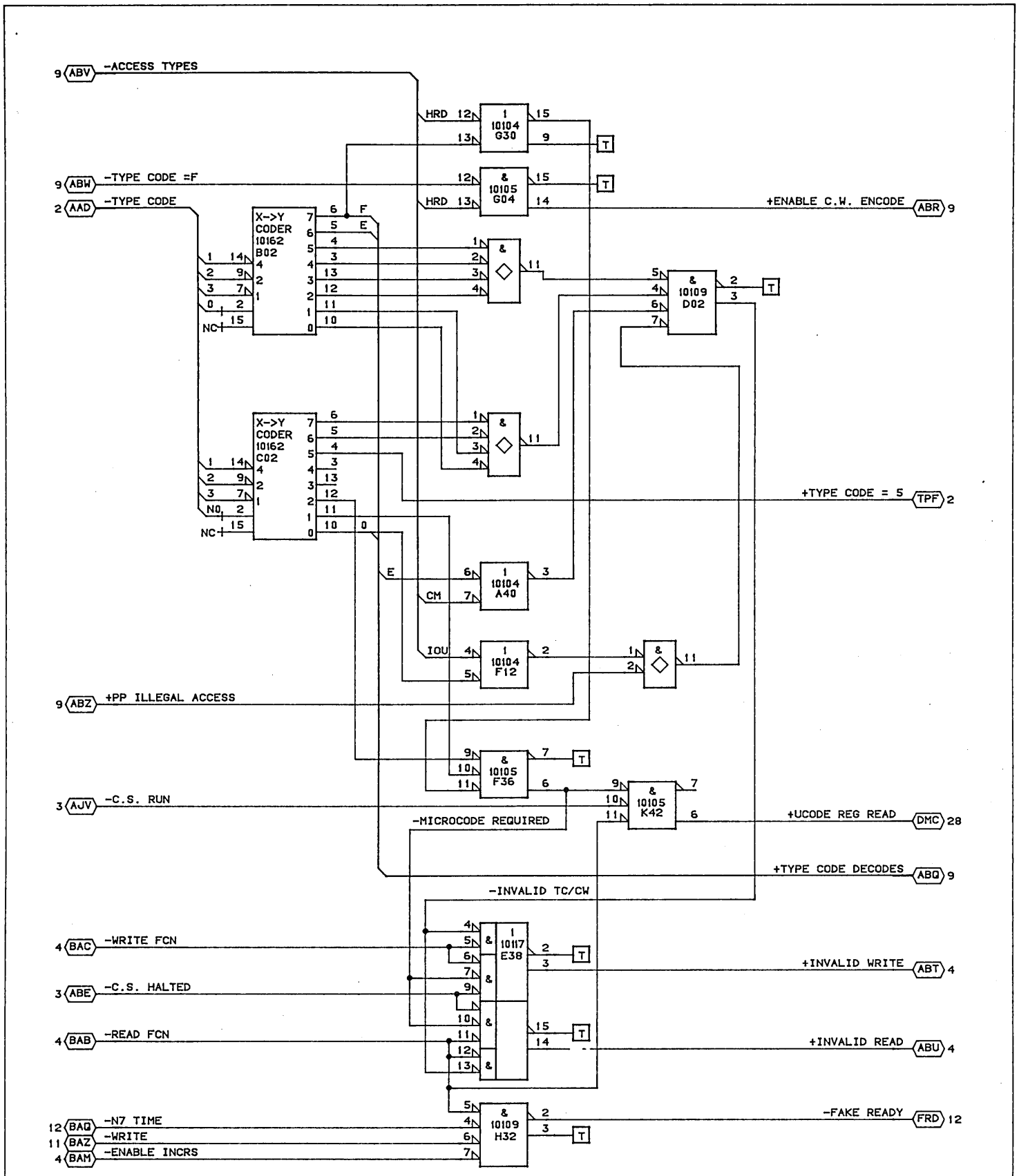

CONTROL DATA CANADA LTD	1DQ0 TYPE CODE DECODING ACCESS CHECKING	C		B
		29-MAR-85	SHEET 08	

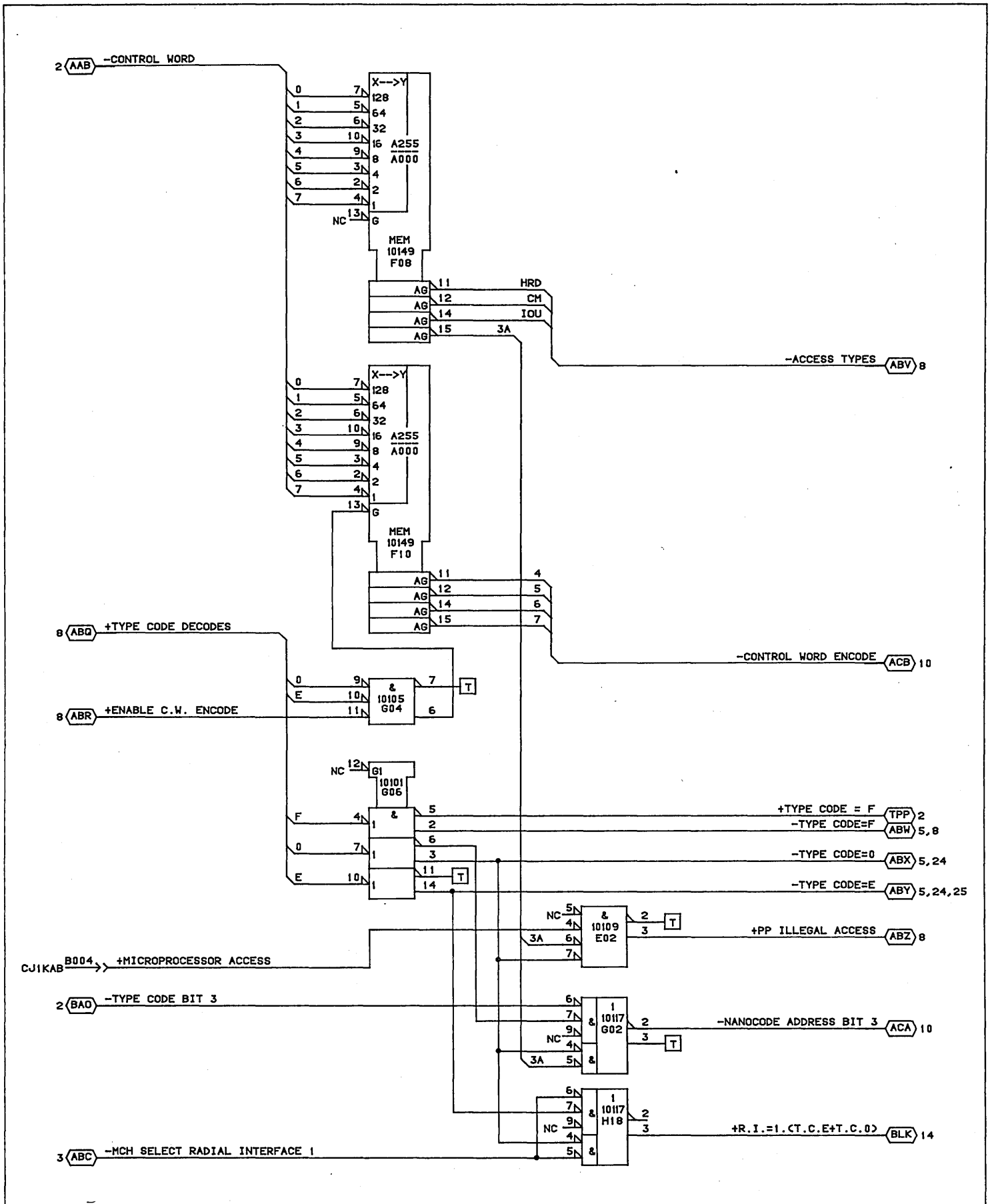

CONTROL DATA CANADA LTD	1DQ0 CONTROL WORD ENCODING	C		B
		29-MAR-85	SHEET 09	

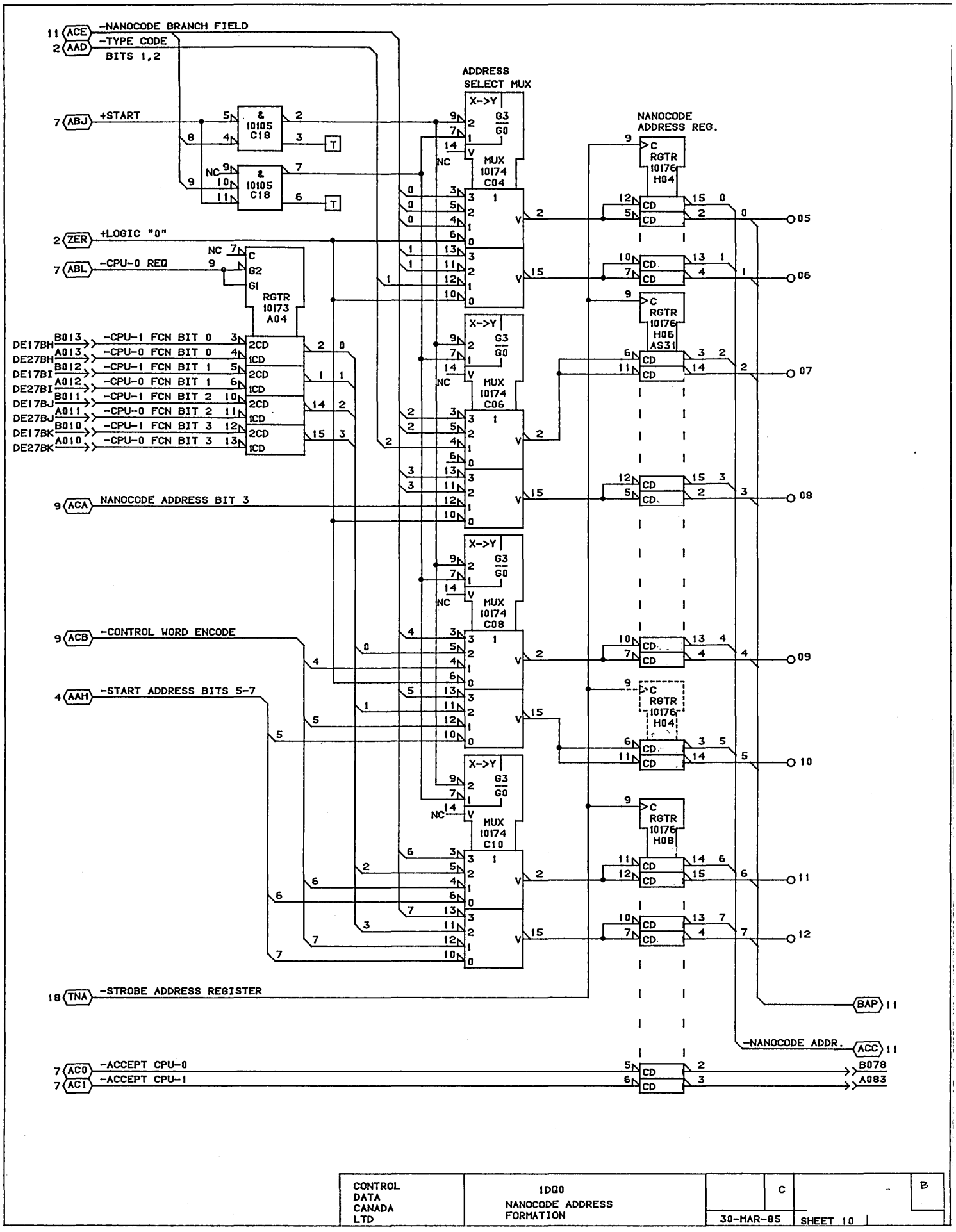

CONTROL DATA CANADA LTD	1DQ0 NANOCODE ADDRESS FORMATION	C	B
		30-MAR-85	SHEET 10

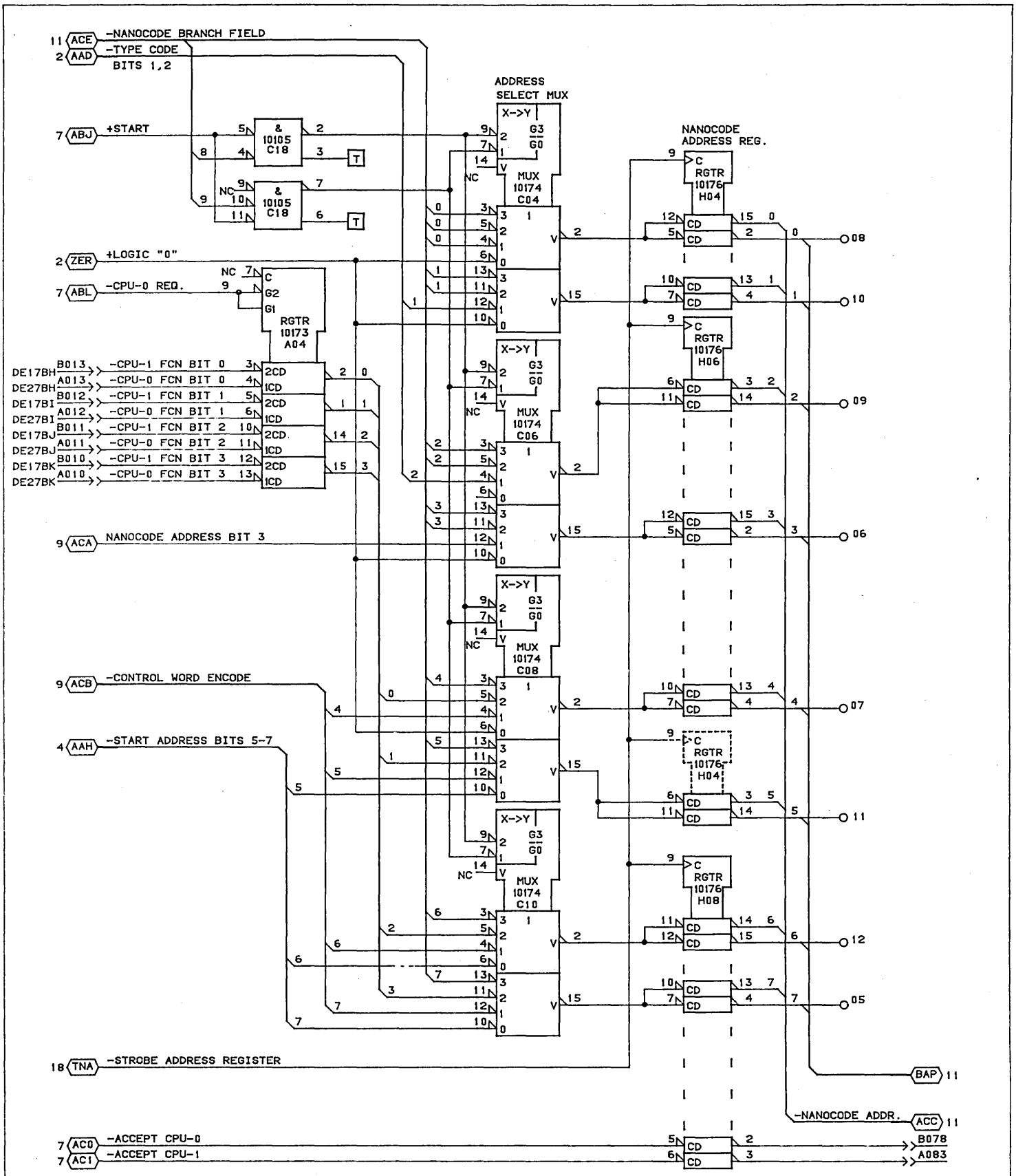

NOTE: THIS DRAWING IS APPLICABLE TO PWB 19268383 ONLY.

CONTROL DATA CANADA LTD	1DQ0 NANOCODE ADDRESS FORMATION	C		B
		29-MAR-85	SHEET 10A	

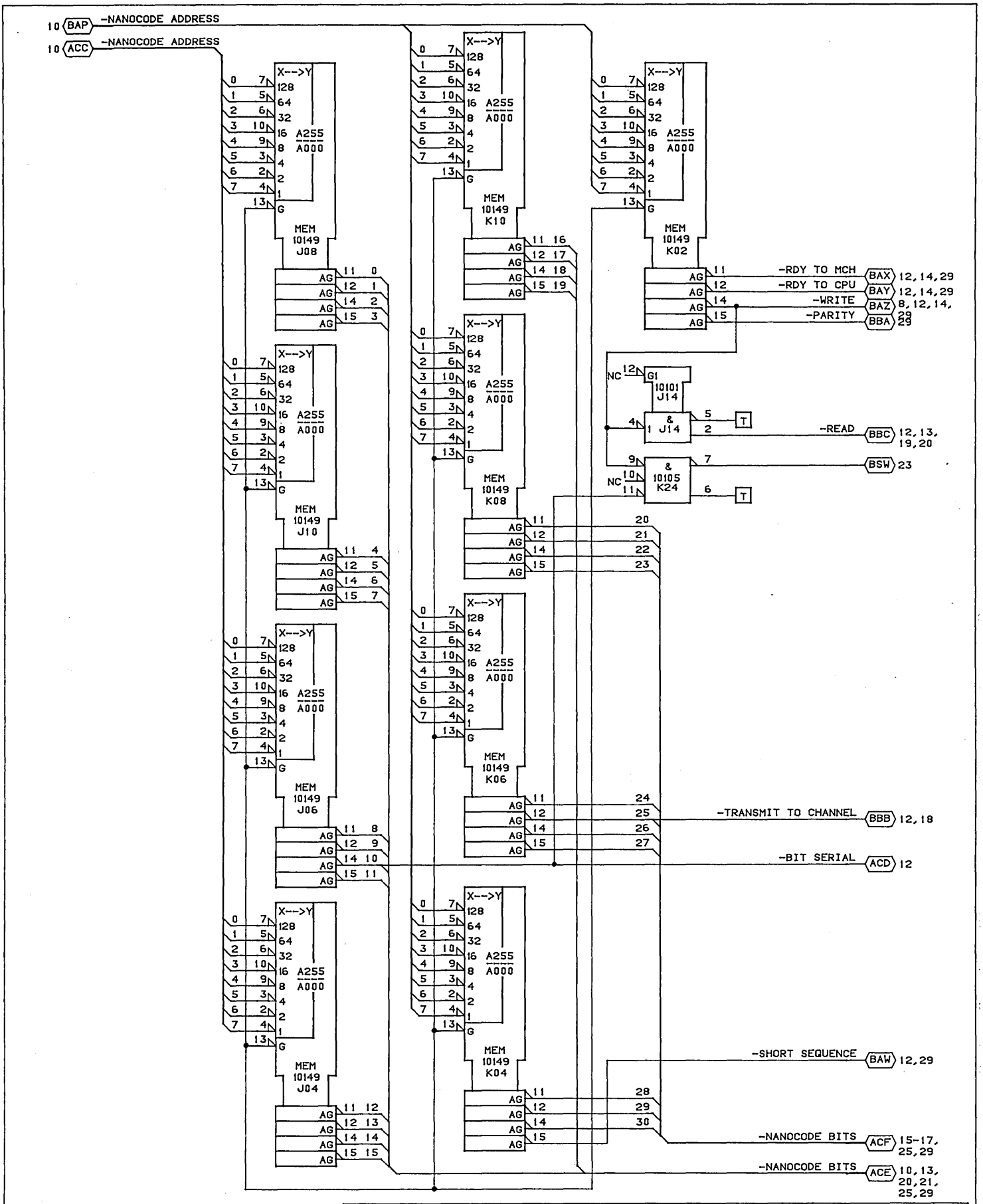

CONTROL DATA CANADA LTD	TYPE: 1DQ0 NANOCODE ROMS MODULE ASSY:210 PAK		C	B
		29-MAR-85	SHEET 11	

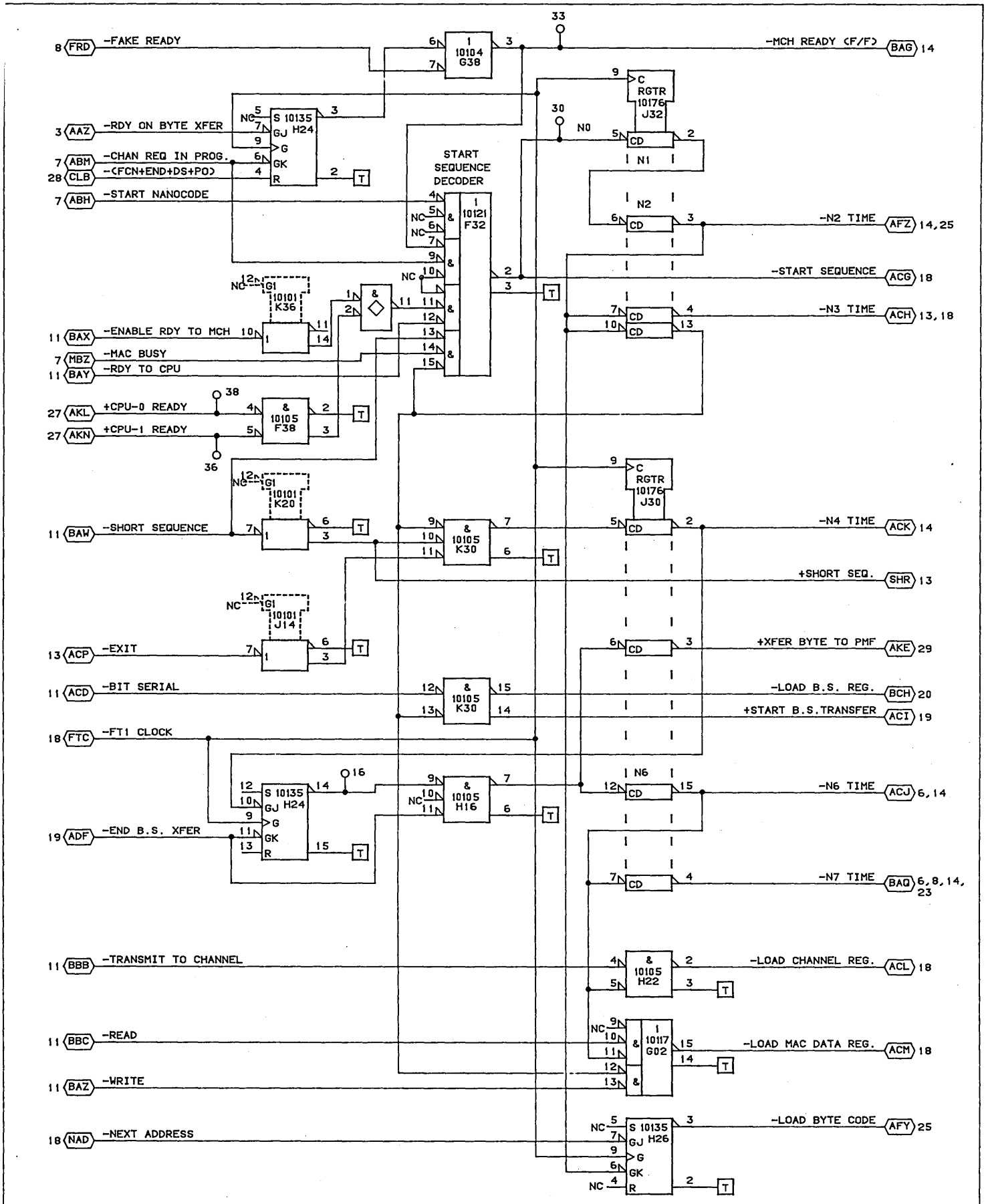

CONTROL DATA CANADA LTD	1DQ0 TIMING CHAIN		C	B
		29-MAR-85	SHEET 12	

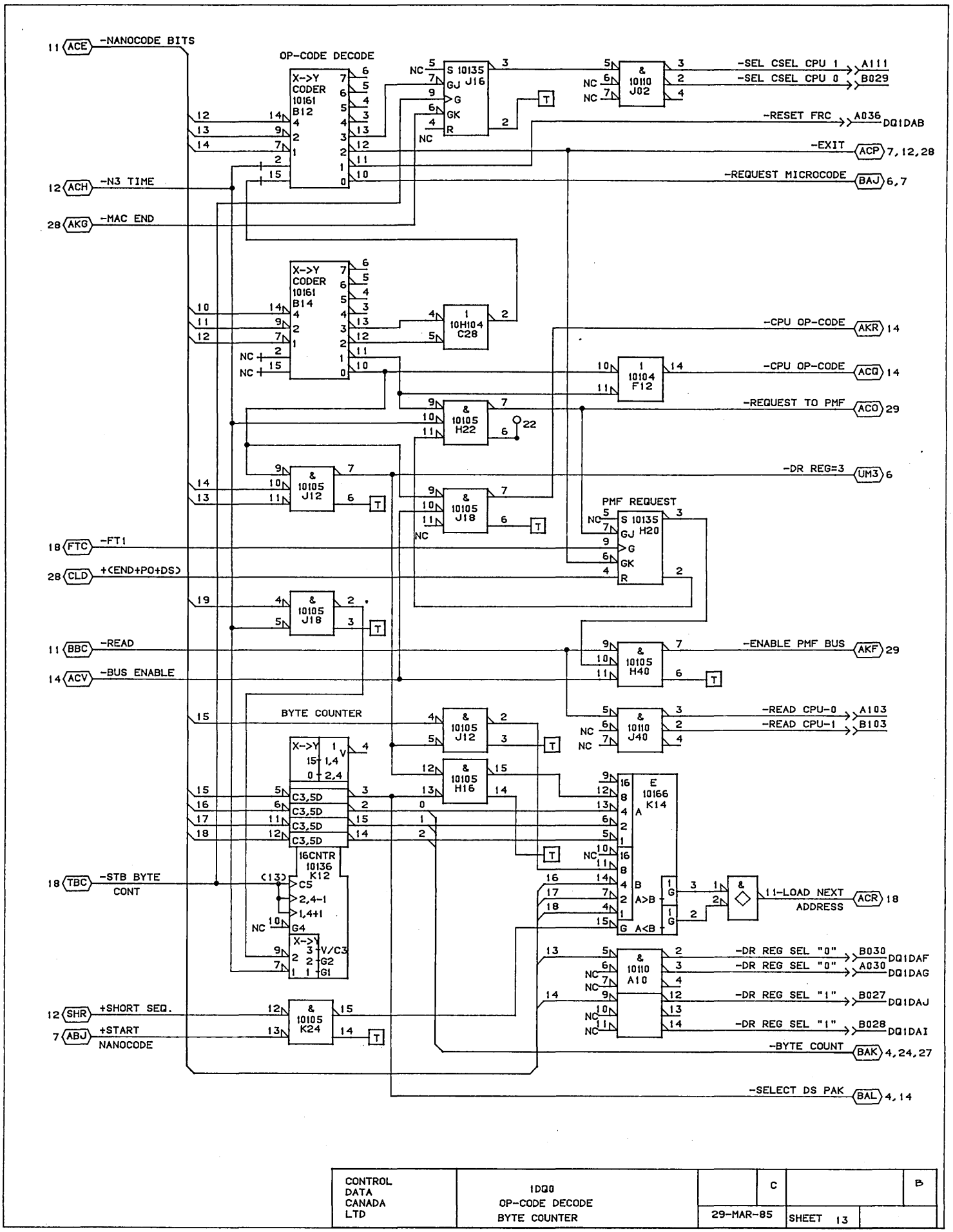
OP-CODE DECODE
BYTE COUNTER
PMF REQUEST
11 ACE -NANOCODE BITS
12 ACH -N3 TIME
28 AKG -MAC END
18 FTC -FT1
28 CLD +(END+PO+DS)
11 BBC -READ
14 ACV -BUS ENABLE
18 TBC -STB BYTE CONT
12 SHR +SHORT SEQ.
7 ABJ +START NANOCODE
-SEL CSEL CPU 1 A111
-SEL CSEL CPU 0 B029
-RESET FRC A036 DQ1DAB
-EXIT ACP 7,12,28
-REQUEST MICROCODE BAJ 6,7
-CPU OP-CODE AKR 14
-CPU OP-CODE ACQ 14
-REQUEST TO PMF ACO 29
-DR REG=3 UM3 6
-ENABLE PMF BUS AKF 29
-READ CPU-0 A103
-READ CPU-1 B103
-LOAD NEXT ADDRESS ACR 18
-DR REG SEL "0" B030 DQ1DAF
-DR REG SEL "0" A030 DQ1DAG
-DR REG SEL "1" B027 DQ1DAJ
-DR REG SEL "1" B028 DQ1DAI
-BYTE COUNT BAK 4,24,27
-SELECT DS PAK BAL 4,14
CONTROL DATA CANADA LTD
1DQ0
OP-CODE DECODE
BYTE COUNTER
29-MAR-85
SHEET 13

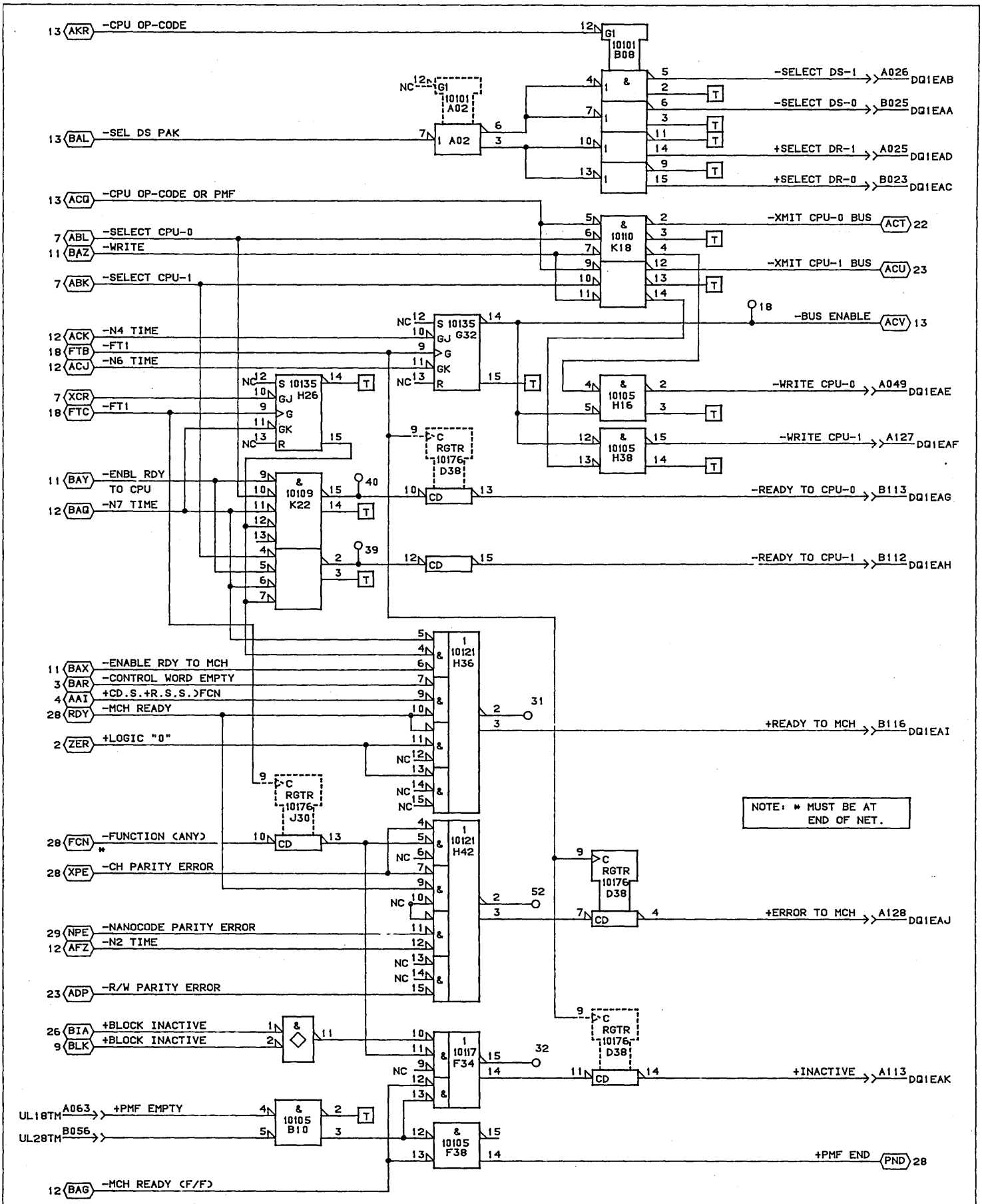

CONTROL DATA CANADA LTD	1DQ0 CPU BUS CONTROLS CPU/CHAN COMMUNICATION	C		B
		30-MAR-85	SHEET 14	

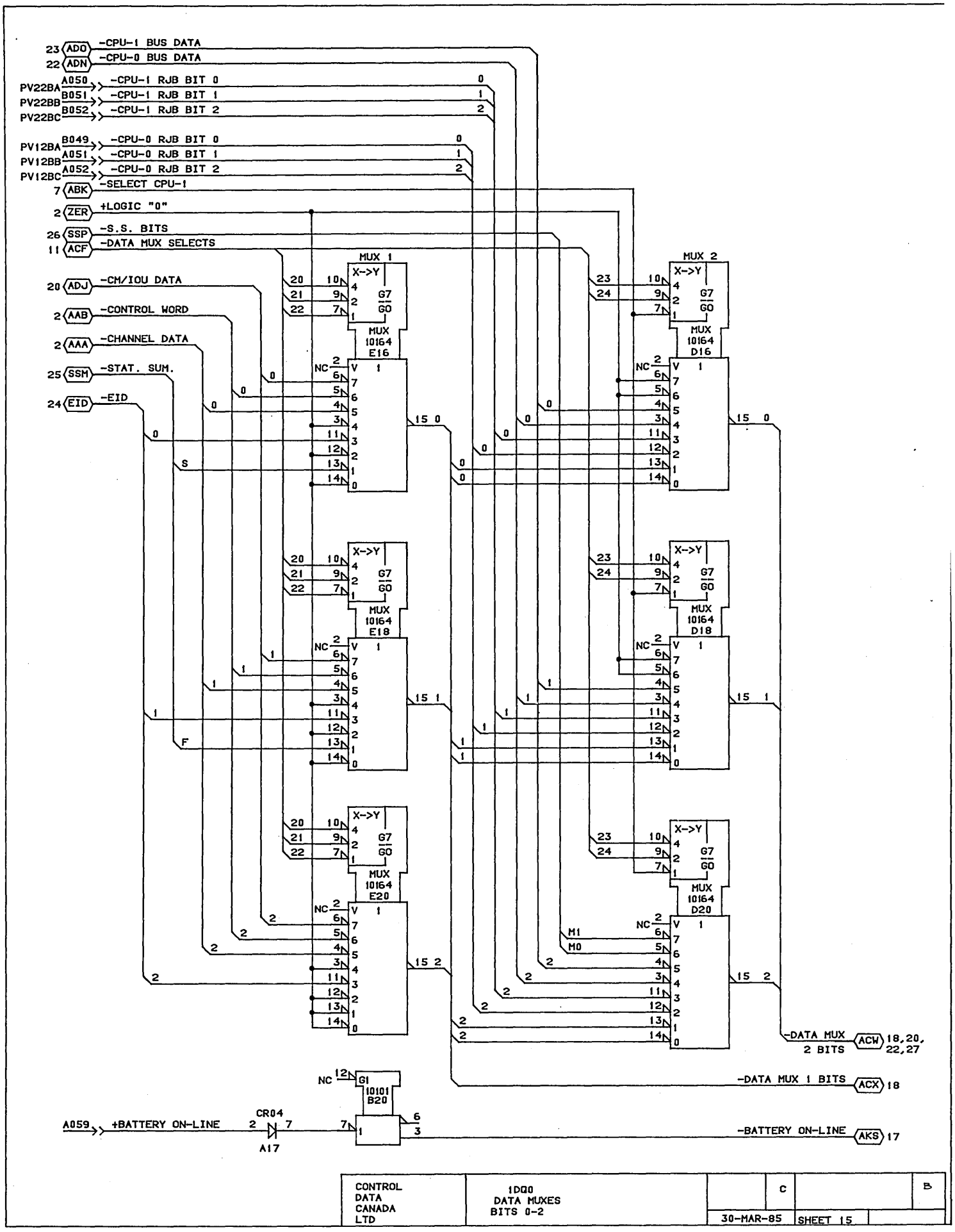

CONTROL DATA CANADA LTD	1DQ0 DATA MUXES BITS 0-2	C		B
		30-MAR-85	SHEET 15	

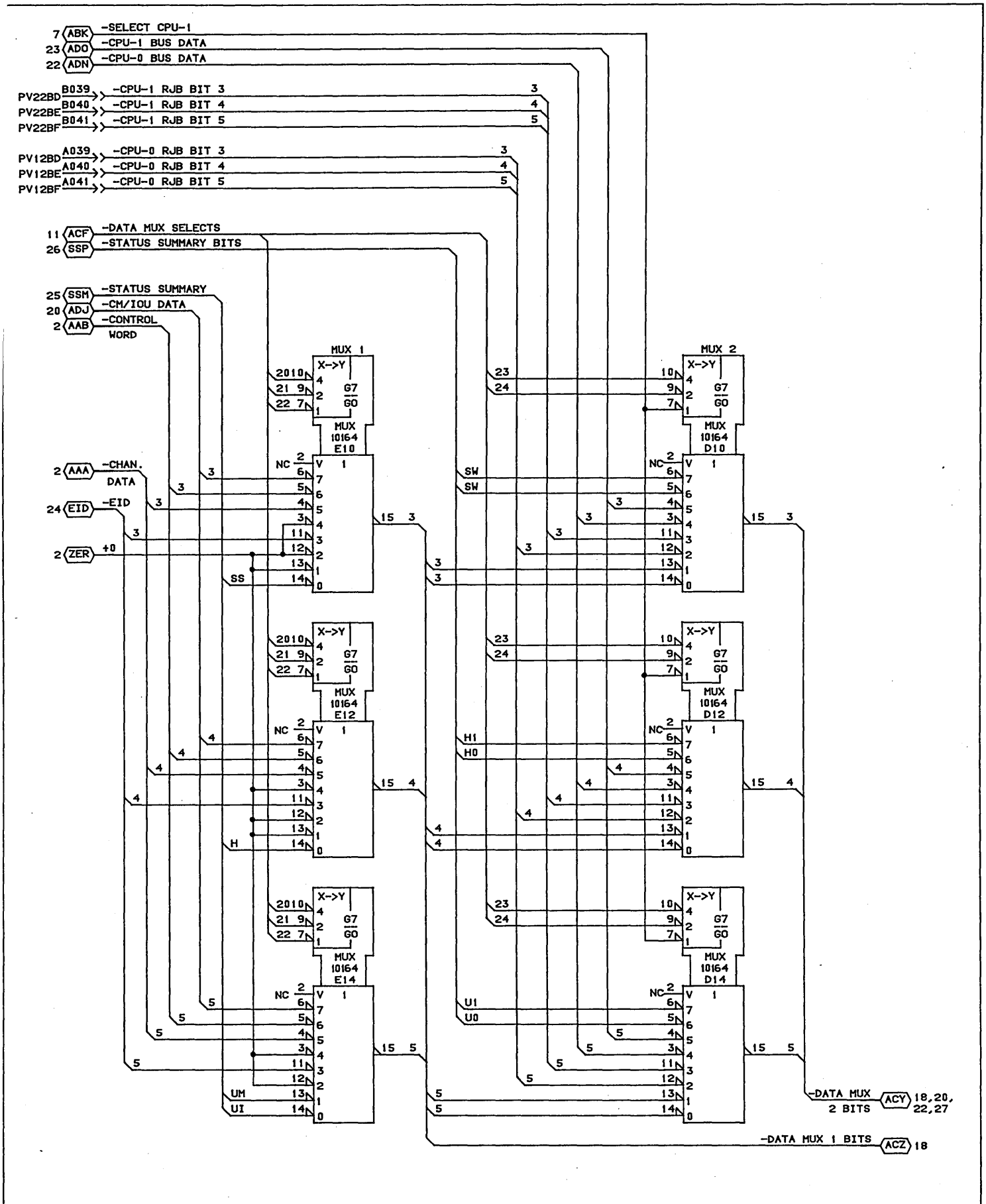

CONTROL DATA CANADA LTD	1DQ0 DATA MUXES BITS 3-5		C	B
		30-MAR-85	SHEET 16	

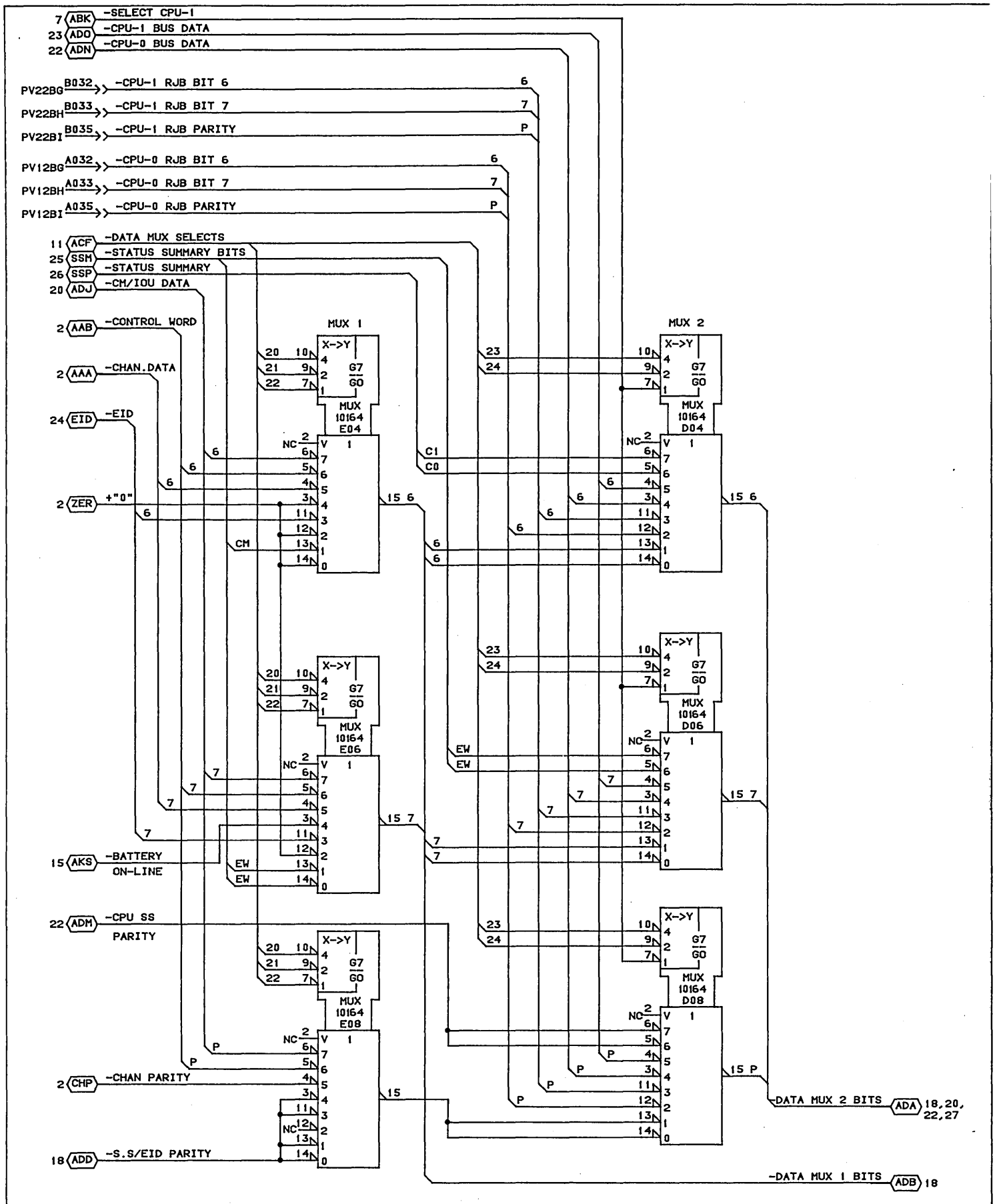

CONTROL DATA CANADA LTD	1DQ0 DATA MUXES BITS 6,7,PARITY	C		B
		30-MAR-85	SHEET 17	

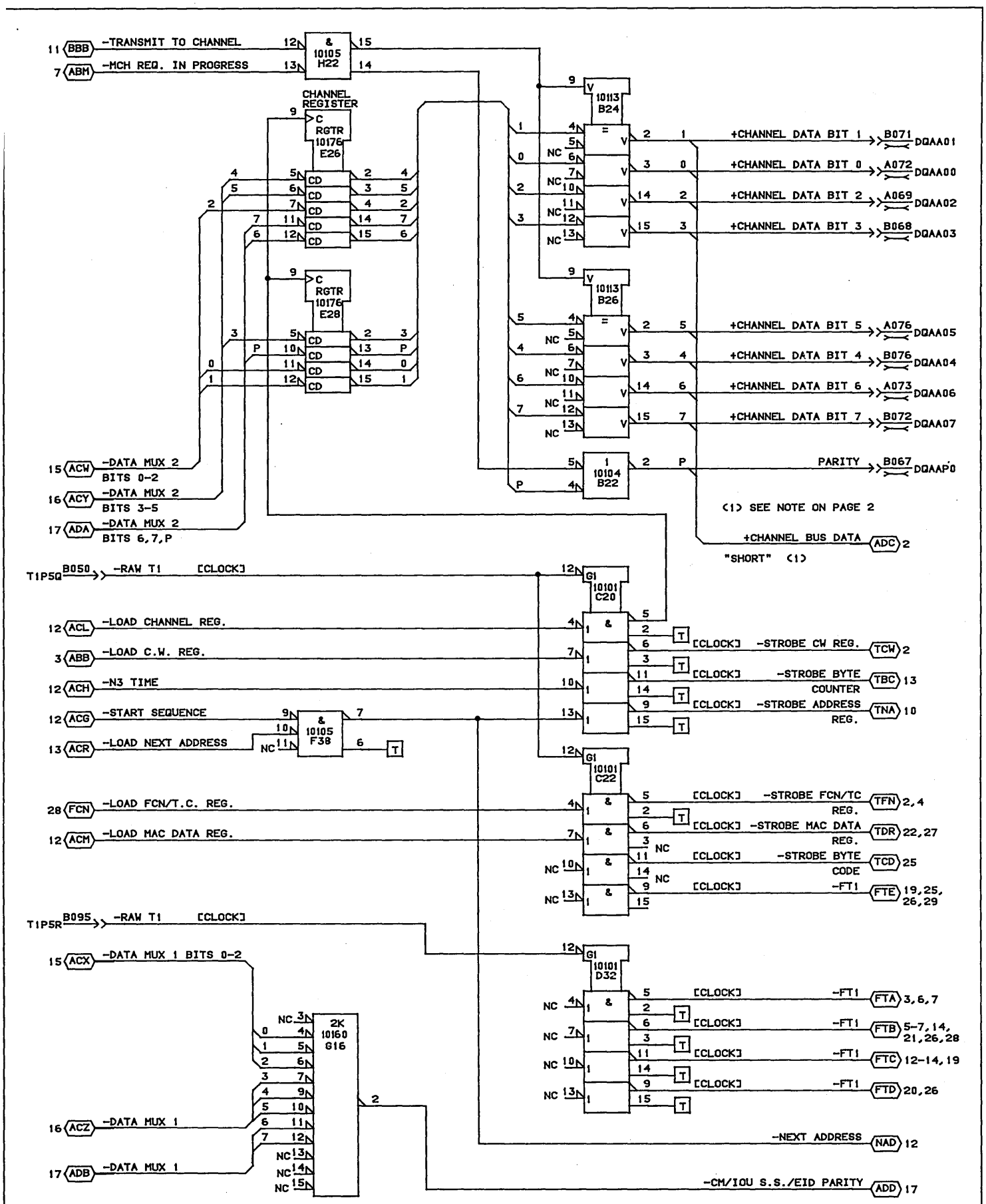

CONTROL DATA CANADA LTD	1DQ0 CHANNEL REGISTER AND TRANSMITTER DATA MUX PARITY	C		B
		24-APR-85	SHEET 18	

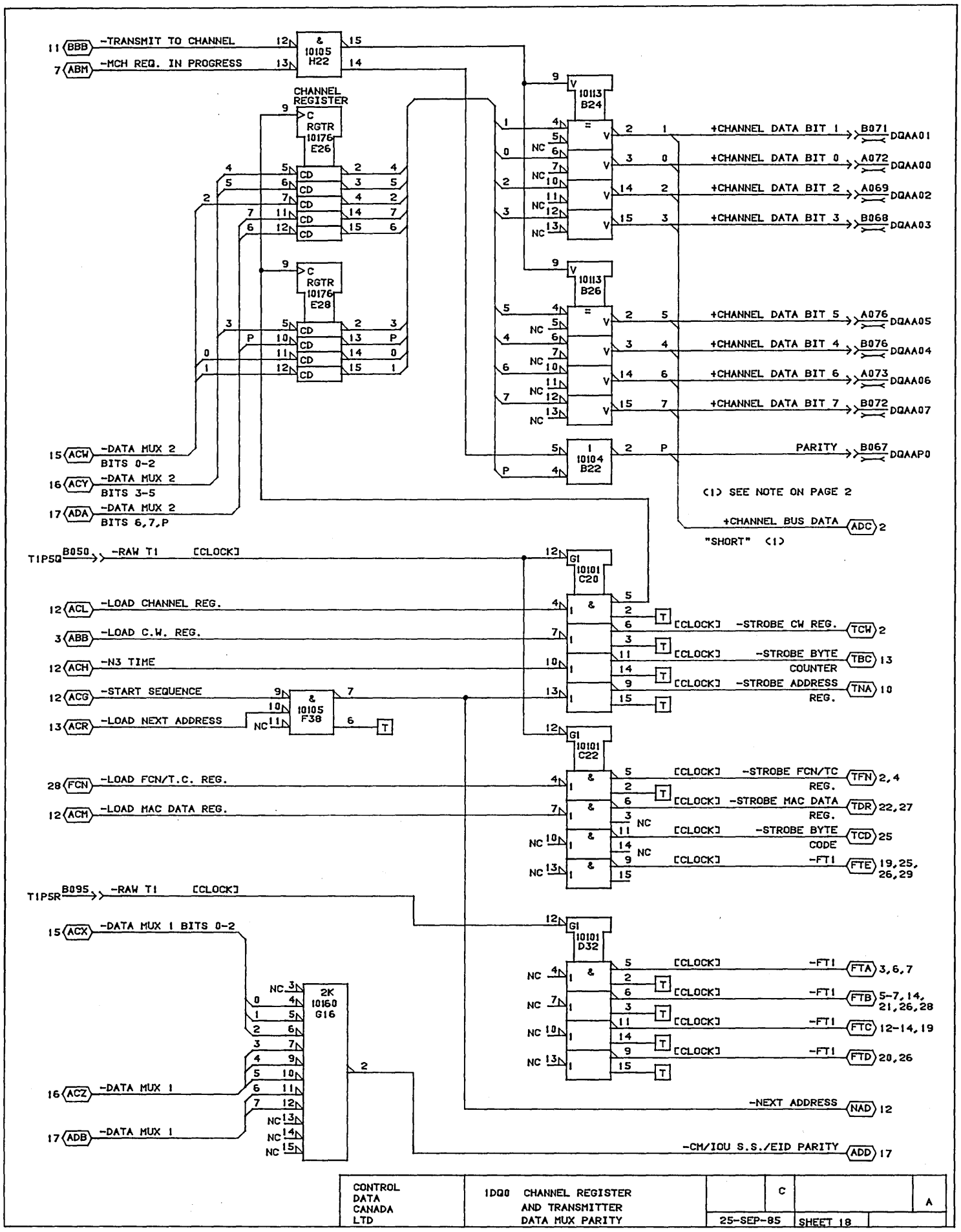

CONTROL DATA CANADA LTD	1DQ0 CHANNEL REGISTER AND TRANSMITTER DATA MUX PARITY	C		A
		25-SEP-85	SHEET 18	

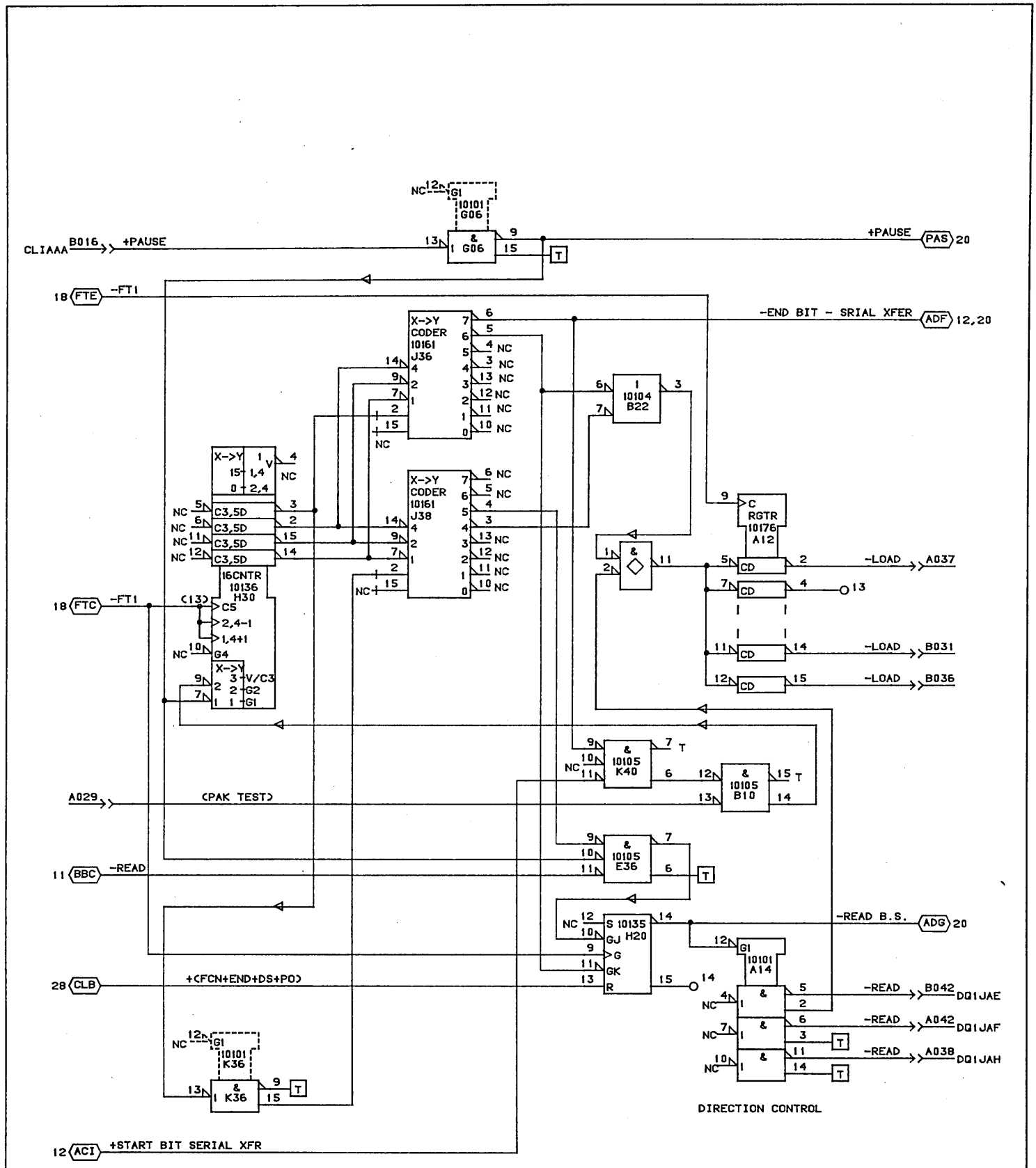

CONTROL DATA CANADA LTD	BIT-SERIAL CONTROL MODULE ASSY-210 PAK TYPE: 5MQ0	C		A
		25-SEP-85	SHEET 19	

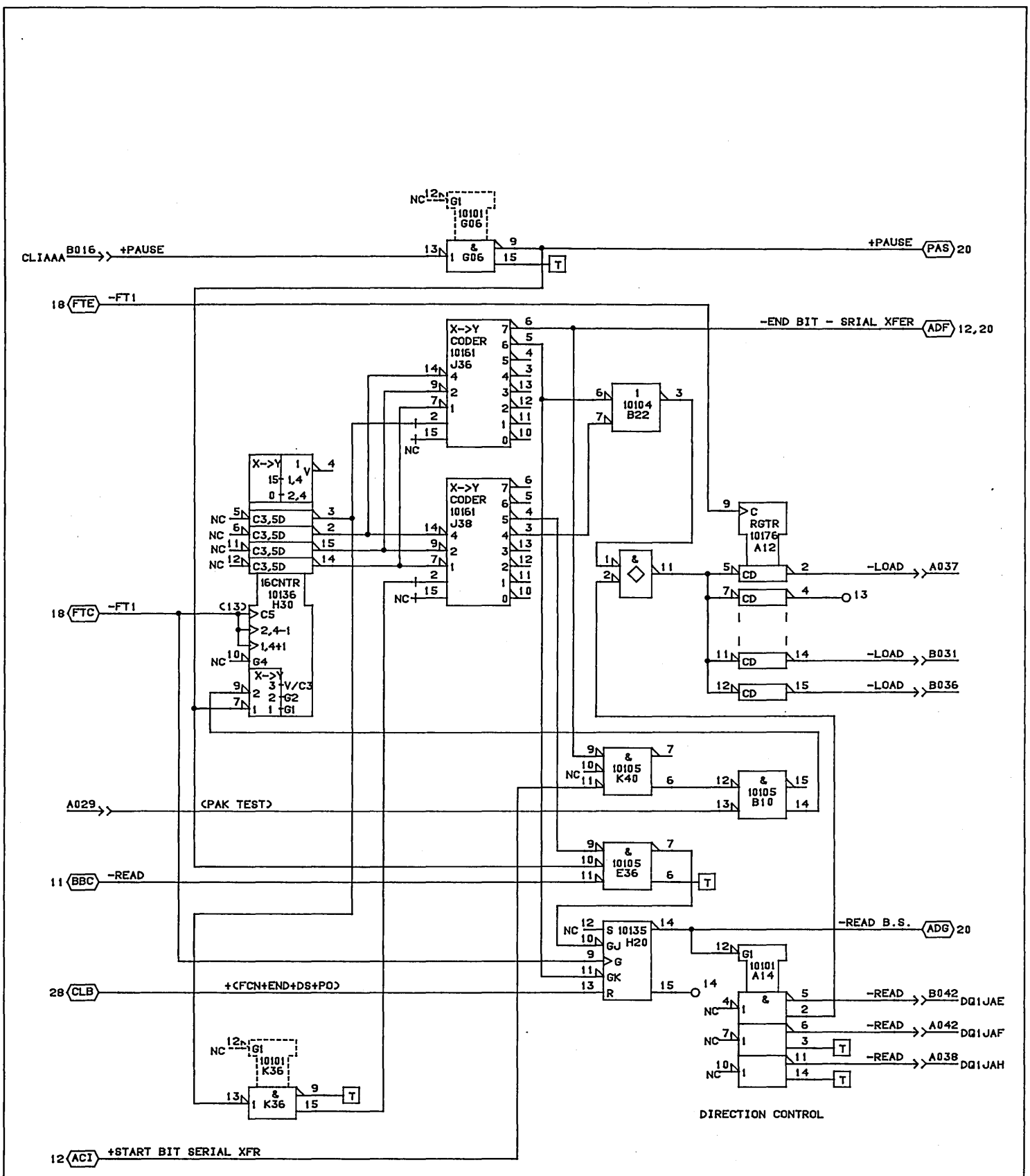

CONTROL DATA CANADA LTD	1DQ0 BIT-SERIAL CONTROL	C		B
		01-APR-85	SHEET 19	

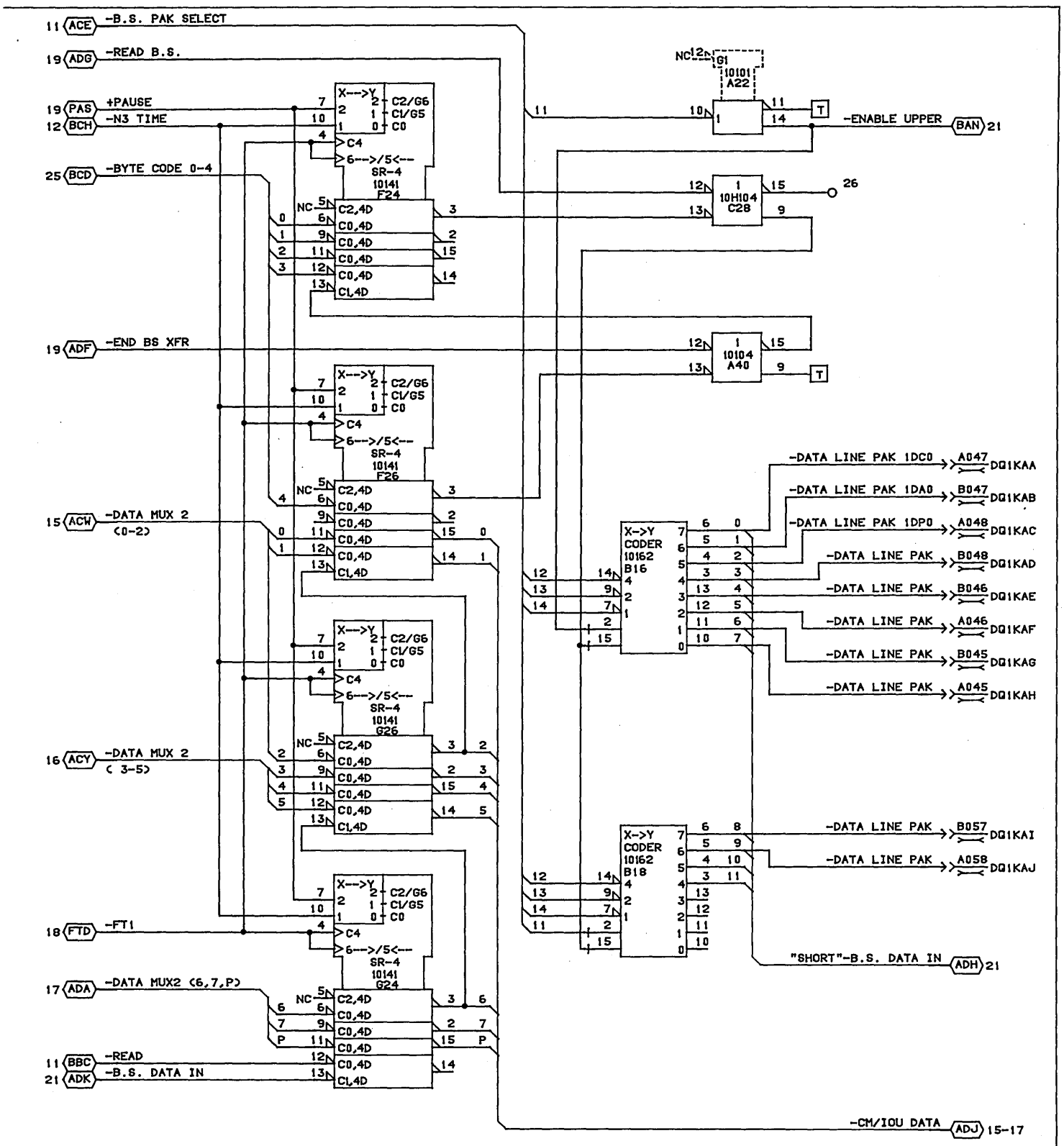

CONTROL DATA CANADA LTD	1DQ0 BIT-SERIAL SHIFT REG. AND OUTPUT SELECTOR	C		B
		30-MAR-85	SHEET 20	

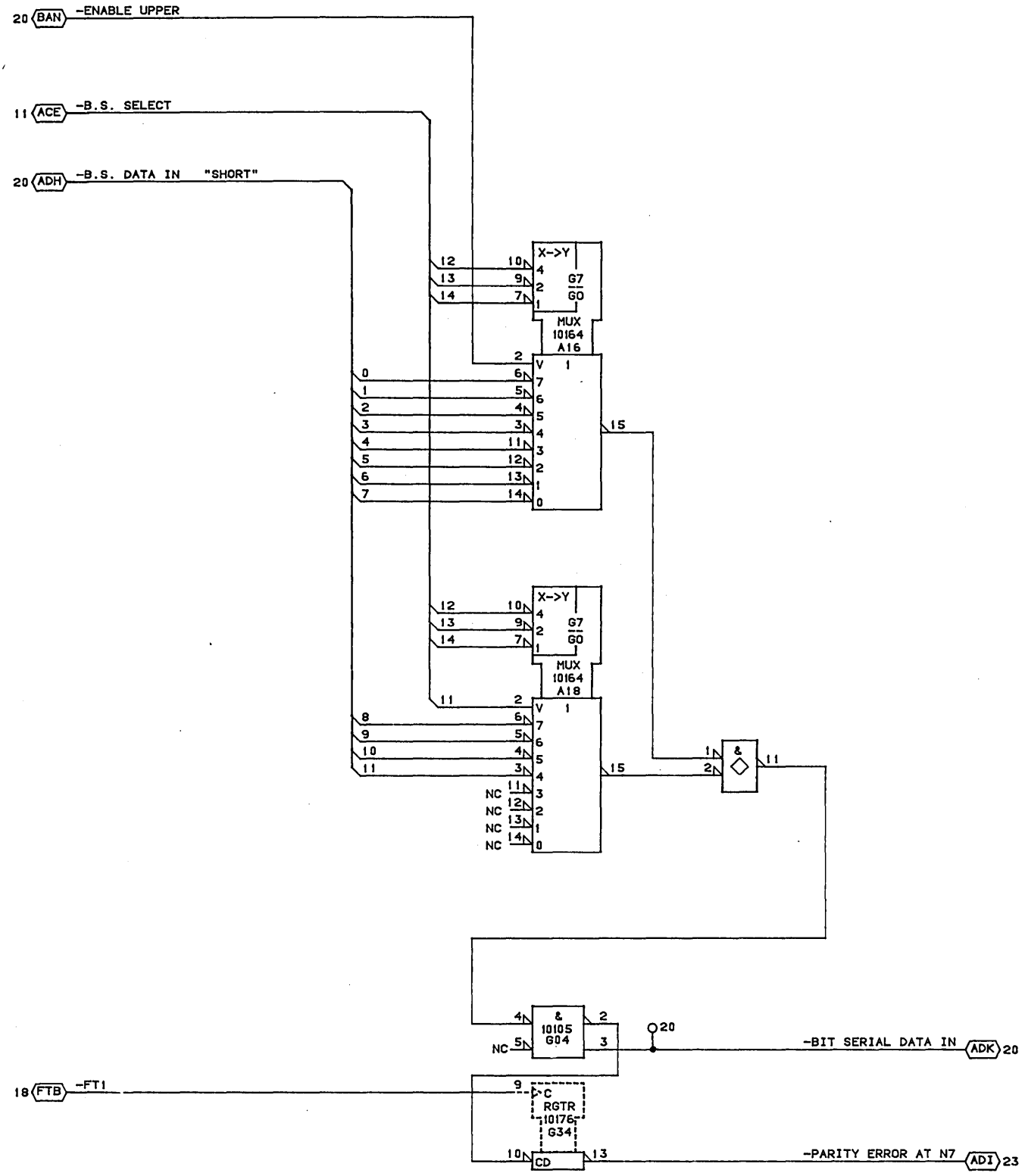

CONTROL DATA CANADA LTD	1DQ0 BIT-SERIAL INPUT SELECTOR	C		B
		01-APR-85	SHEET 21	

NOTE: TRUE FOIL LENGTHS MUST BE LESS THAN 2 INCHES FROM CONNECTOR PINS TO 10123 AND 10101 CHIPS.

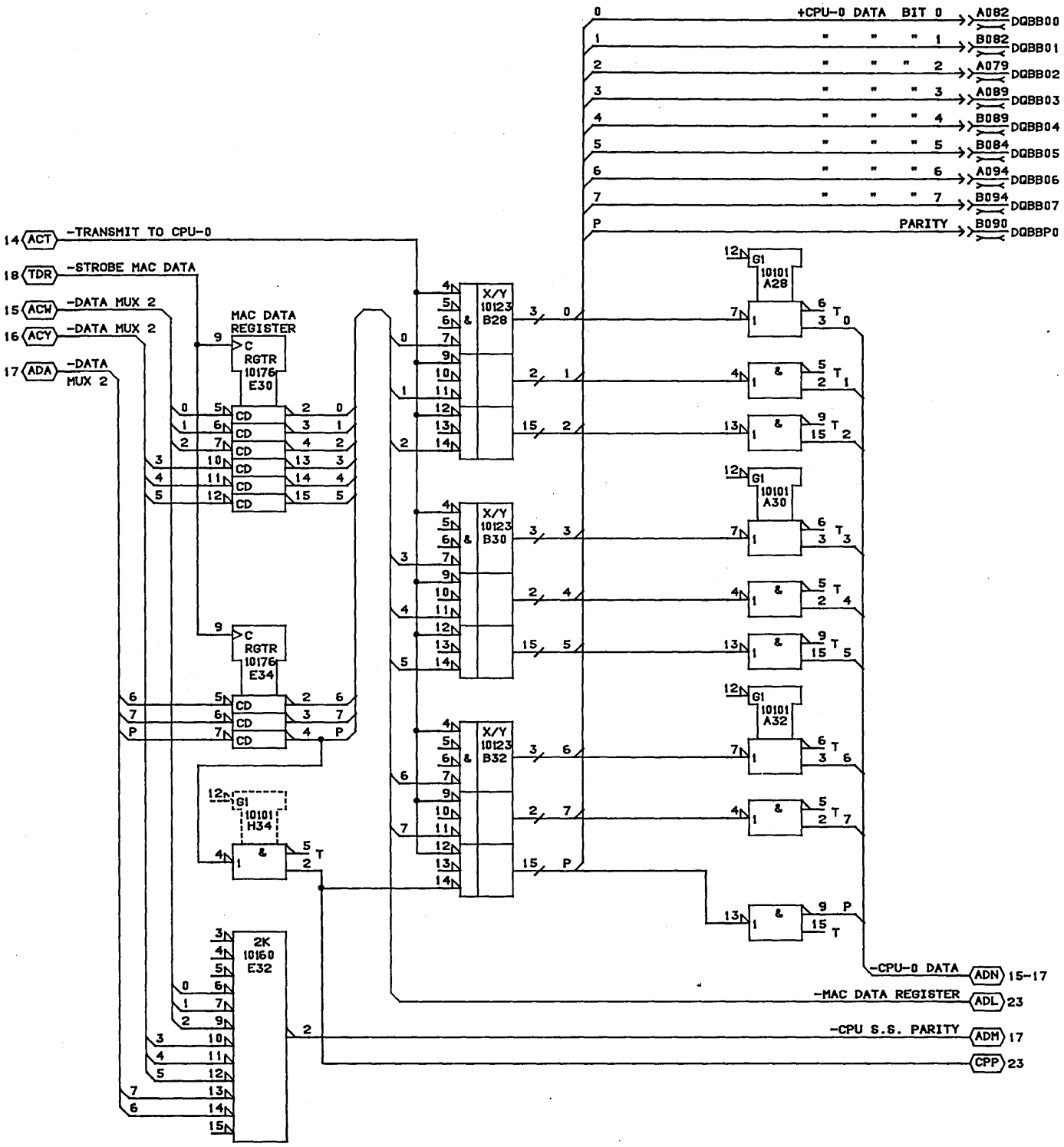

CONTROL DATA CANADA LTD	1DQ0 MAC DATA REGISTER CPU-0 BUS	C		B
		01-APR-85	SHEET 22	

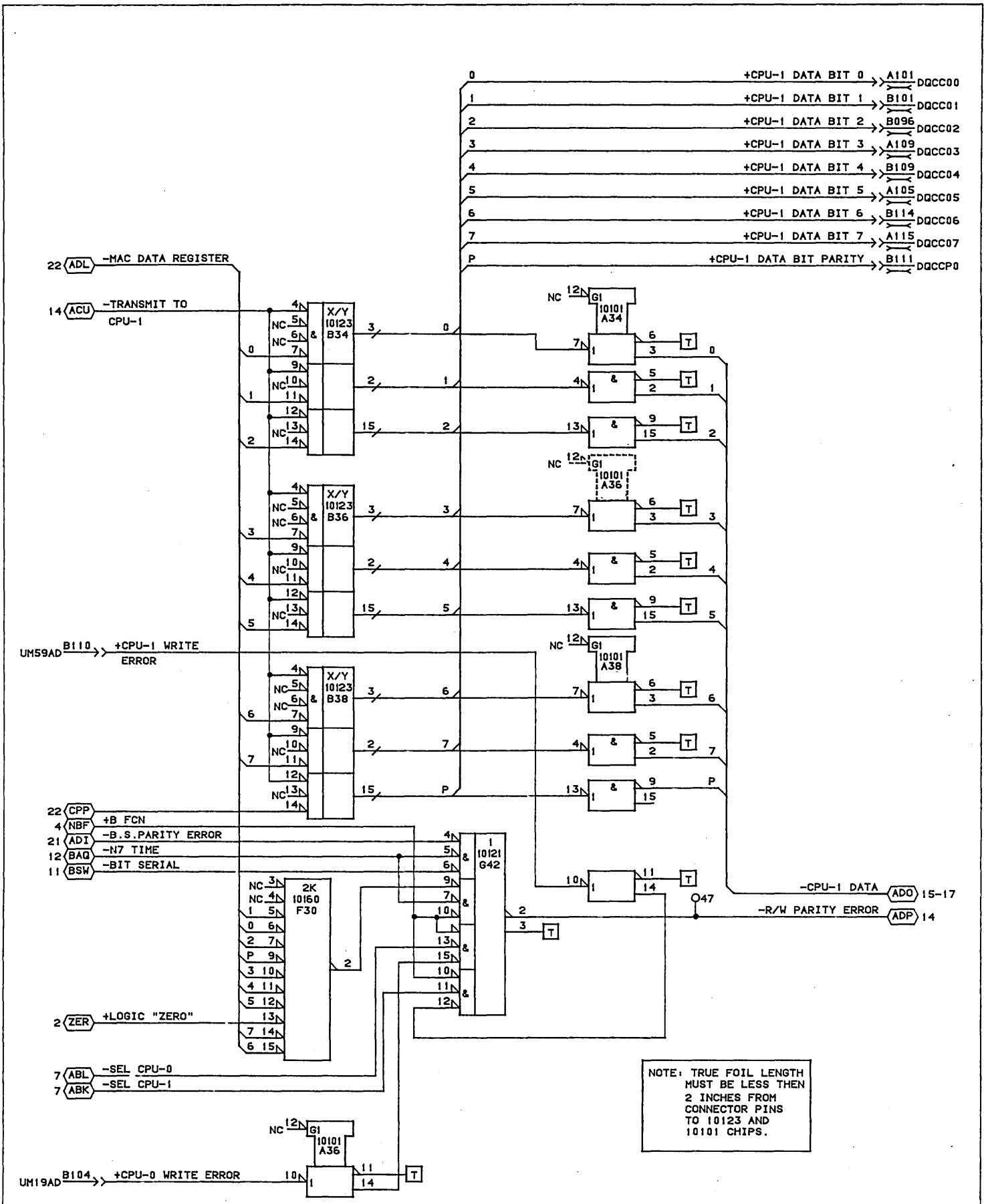

CONTROL DATA CANADA LTD	1DQ0 CPU-1 BUS MAC DATA PARITY CHECK	C		B
		01-APR-85	SHEET 23	

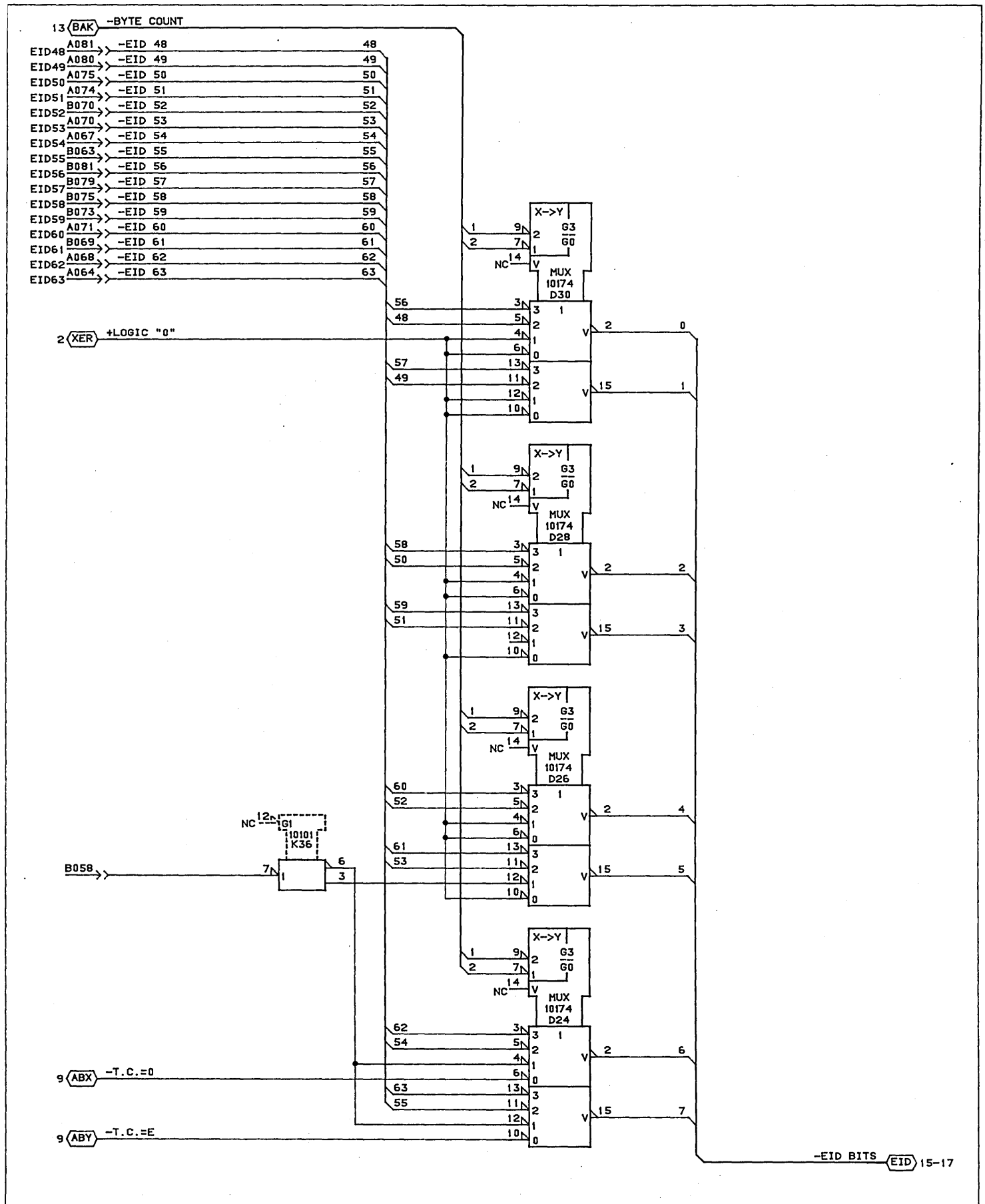

CONTROL DATA CANADA LTD	1DQ0 ELEMENT I. D.	C		B
		30-MAR-85	SHEET 24	

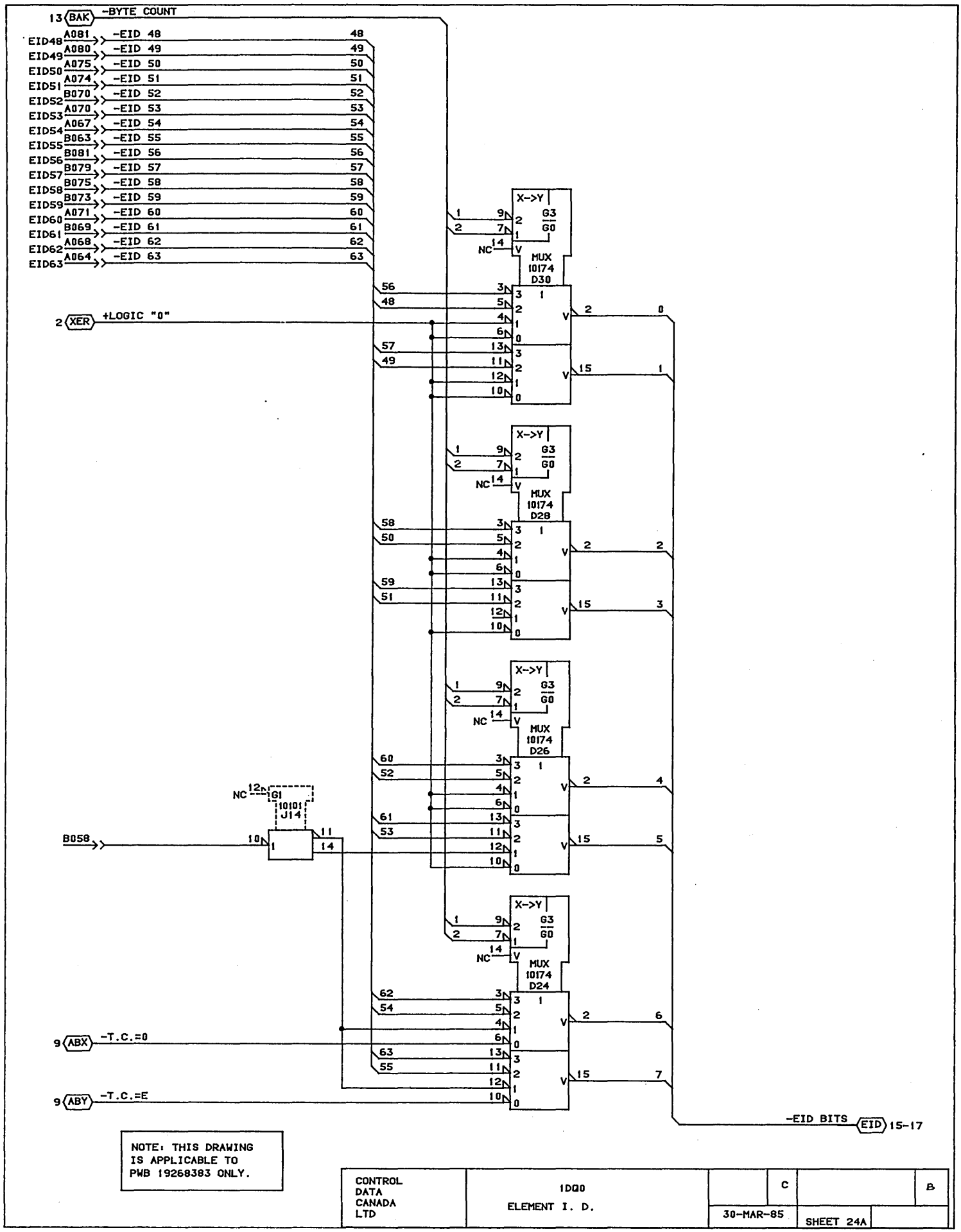

NOTE: THIS DRAWING IS APPLICABLE TO PWB 19268383 ONLY.

CONTROL DATA CANADA LTD	1DQ0 ELEMENT I. D.	C		B
		30-MAR-85	SHEET 24A	

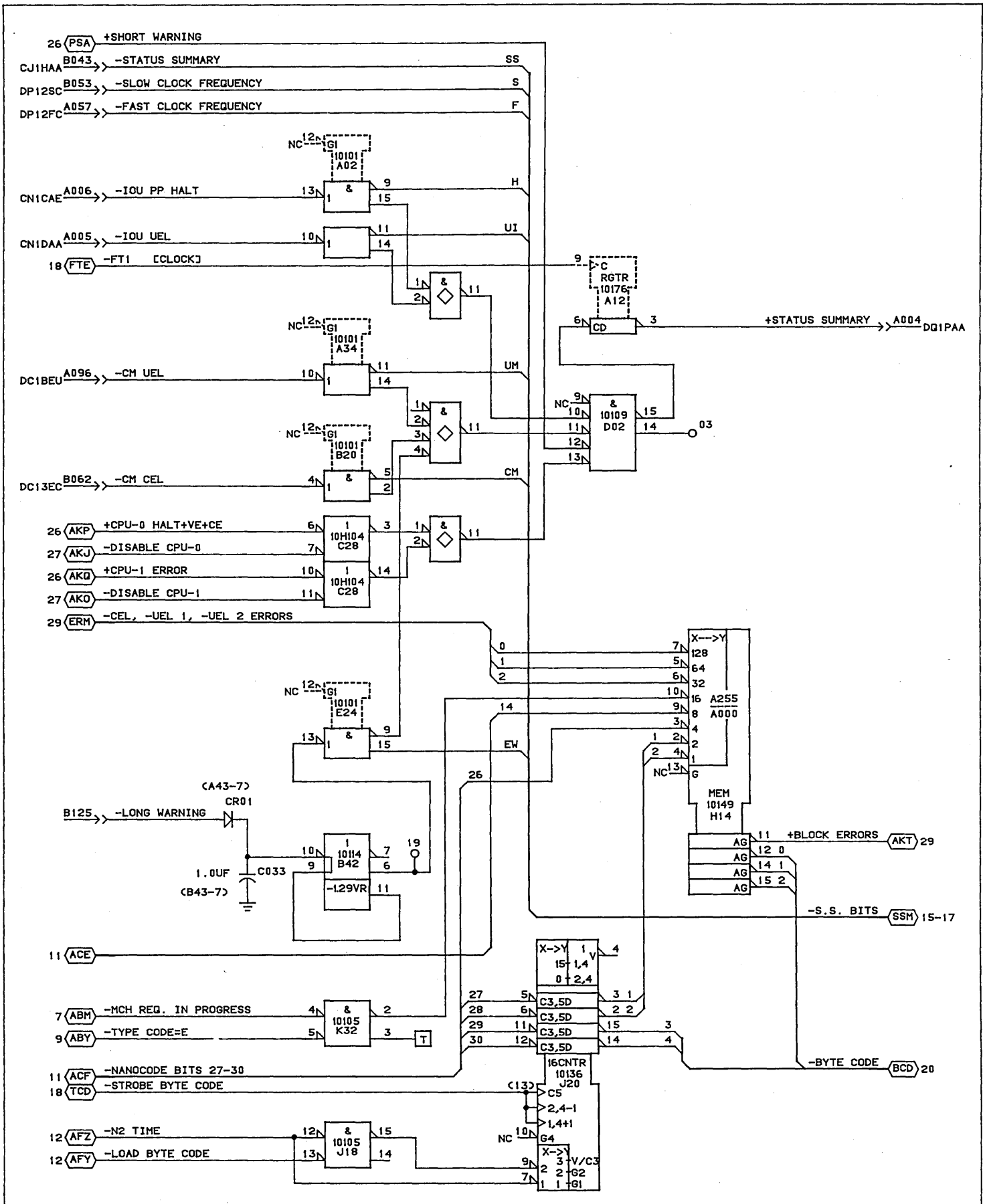

CONTROL DATA CANADA LTD	1DQ0 IOU/CM STATUS SUMMARY BITS BYTE CODE INCREMENTOR		C	B
		30-MAR-85	SHEET 25	

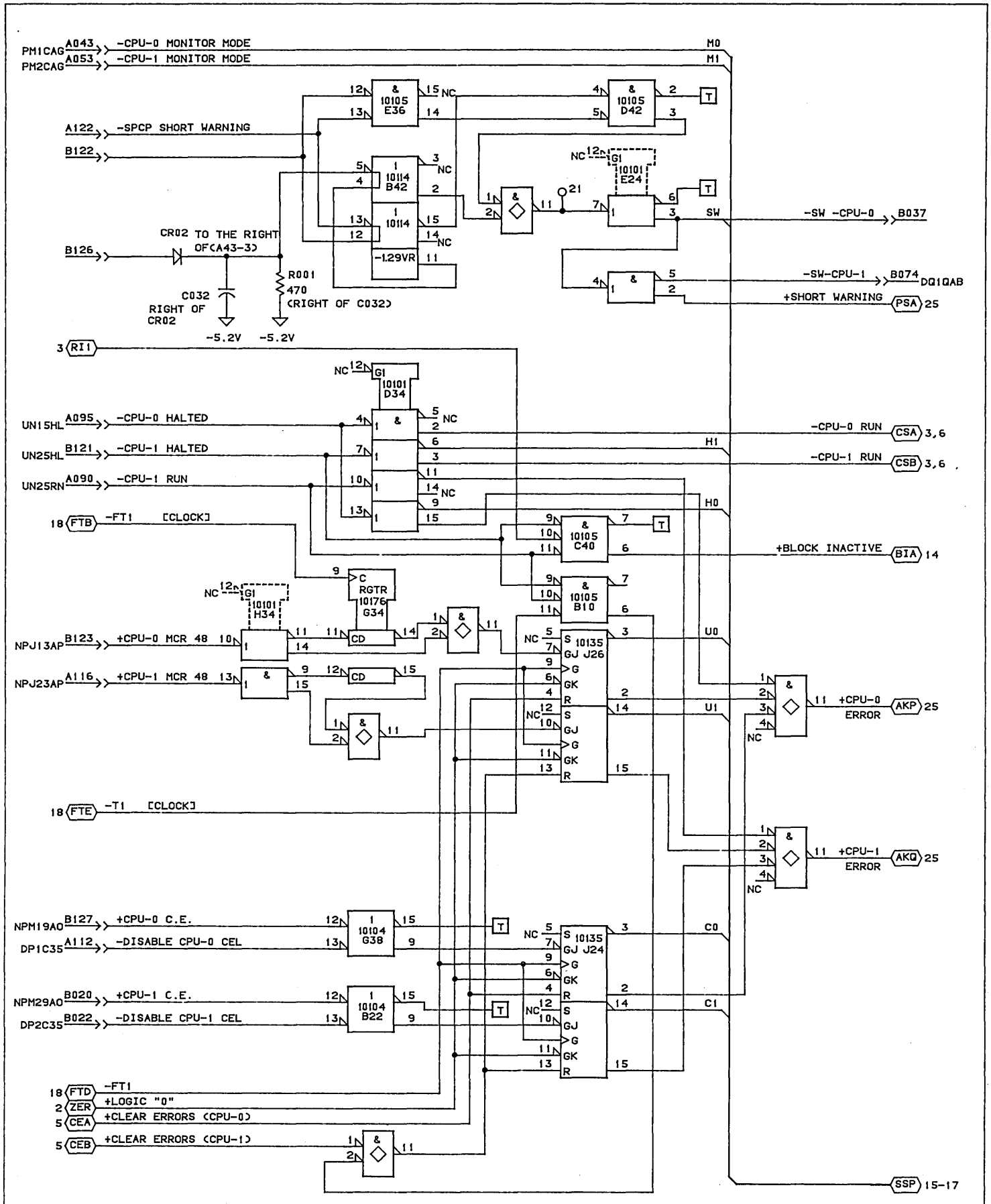

CONTROL DATA CANADA LTD	1DQ0 CPU STATUS SUMMARY BITS	C		B
		30-MAR-85	SHEET 26	

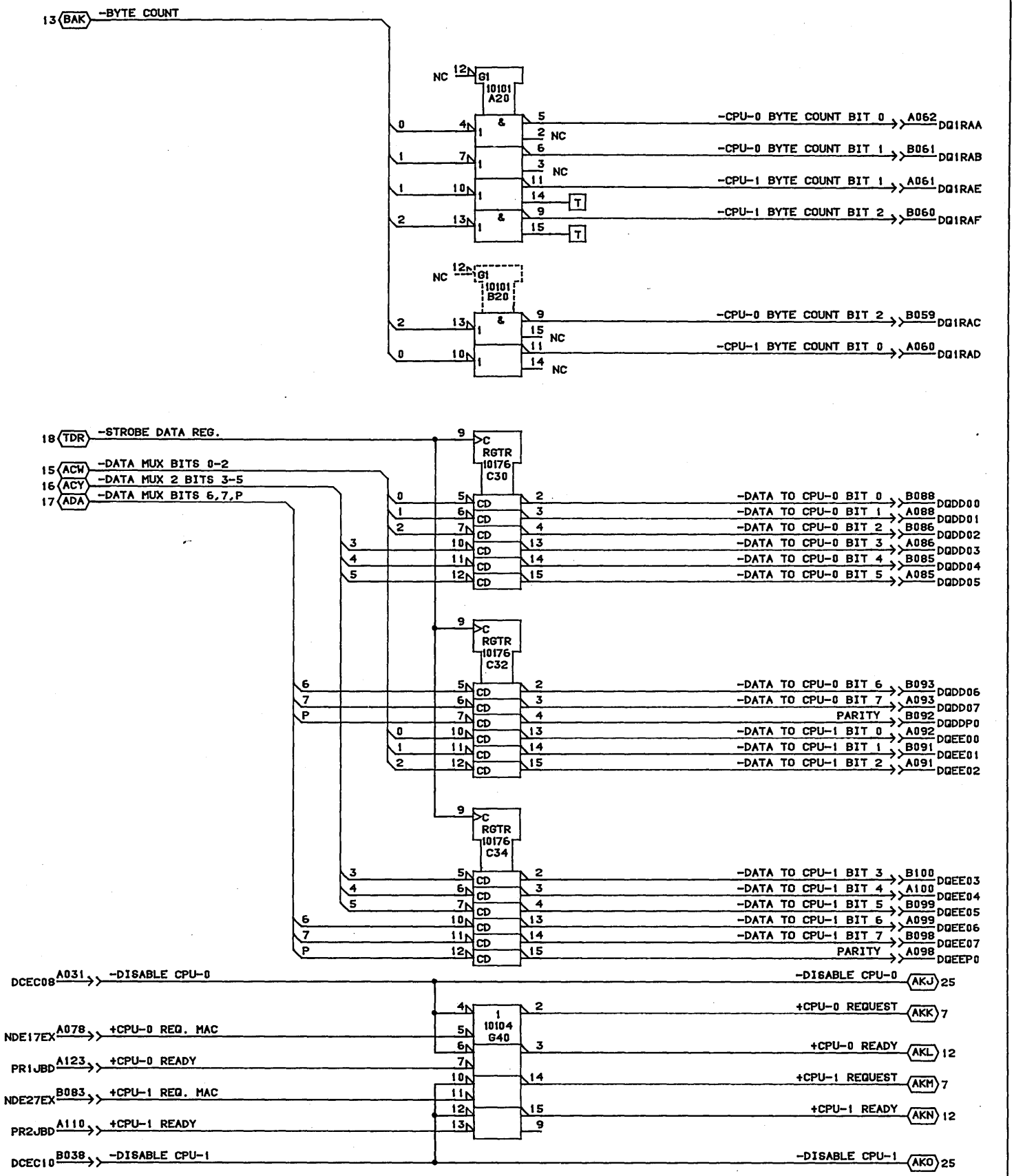

CONTROL DATA CANADA LTD	1DQ0 BYTE COUNT AND DATA TO CPUS'	C		B
		01-APR-85	SHEET 27	

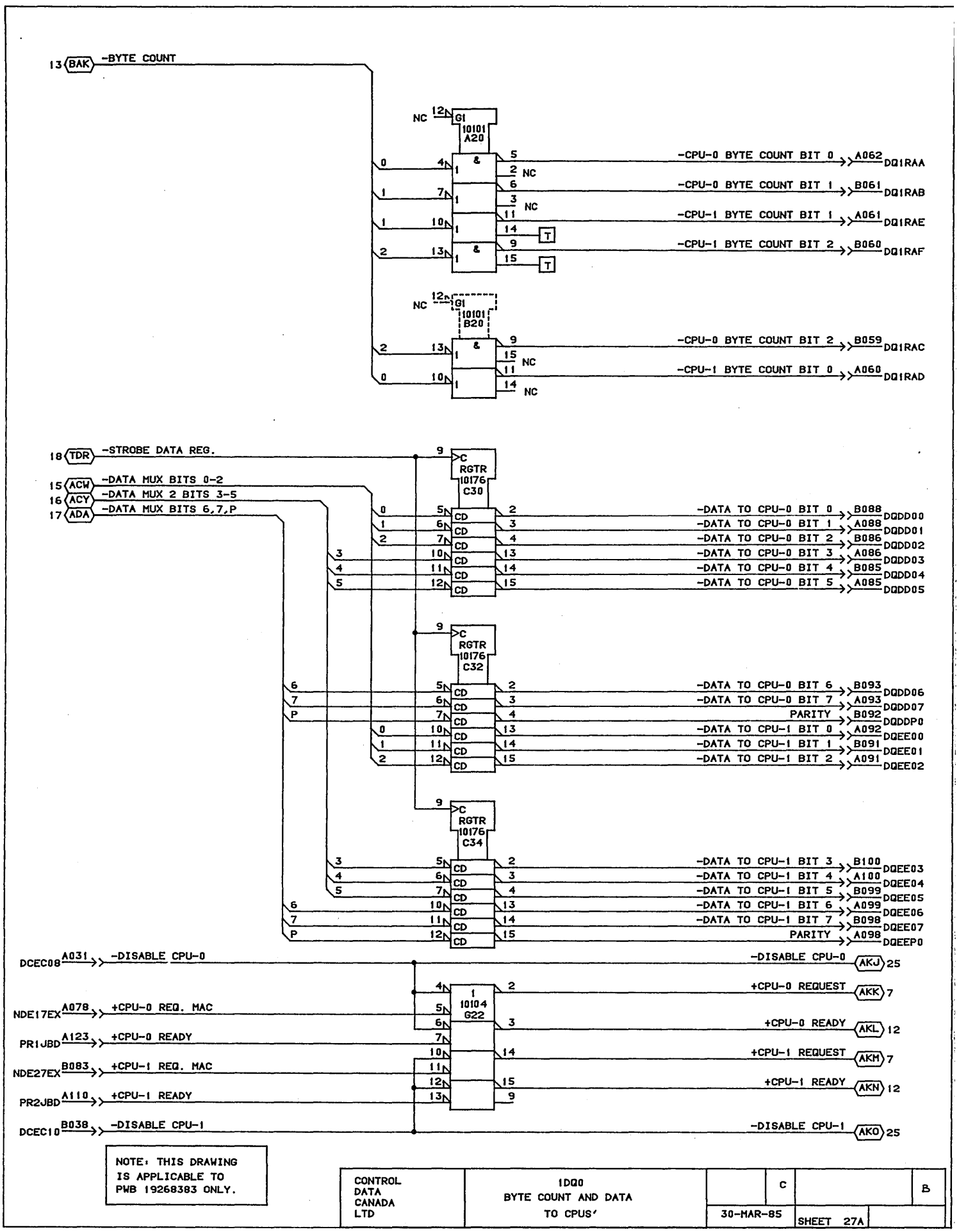

NOTE: THIS DRAWING IS APPLICABLE TO PWB 19268383 ONLY.

CONTROL DATA CANADA LTD	1DQ0 BYTE COUNT AND DATA TO CPUS'		C	B
		30-MAR-85	SHEET 27A	

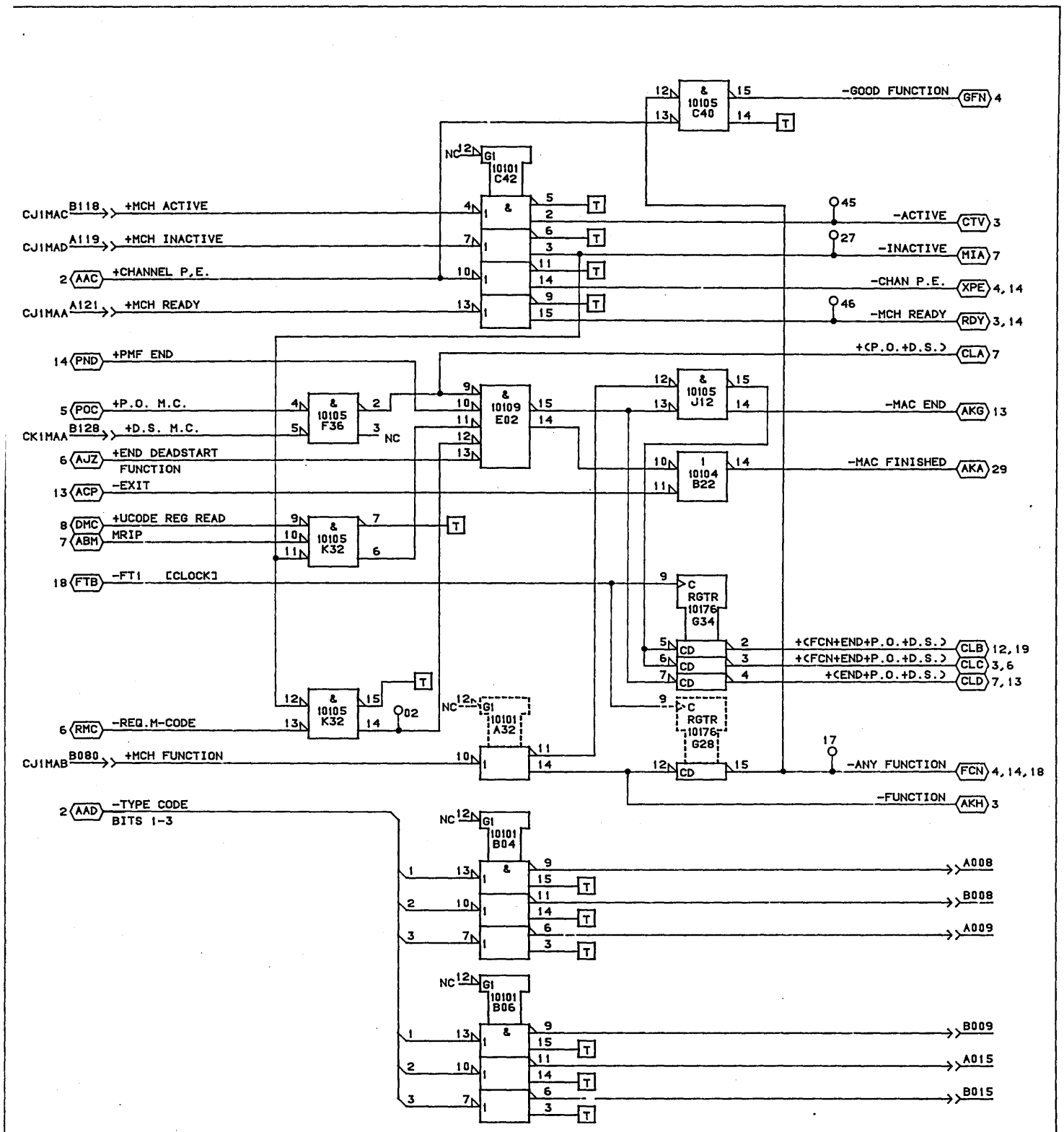

CONTROL DATA CANADA LTD	1DQ0 MCH SIGNALS IN F/F RESETS MAINTENANCE SCAN	C		B
		01-APR-85	SHEET 28	

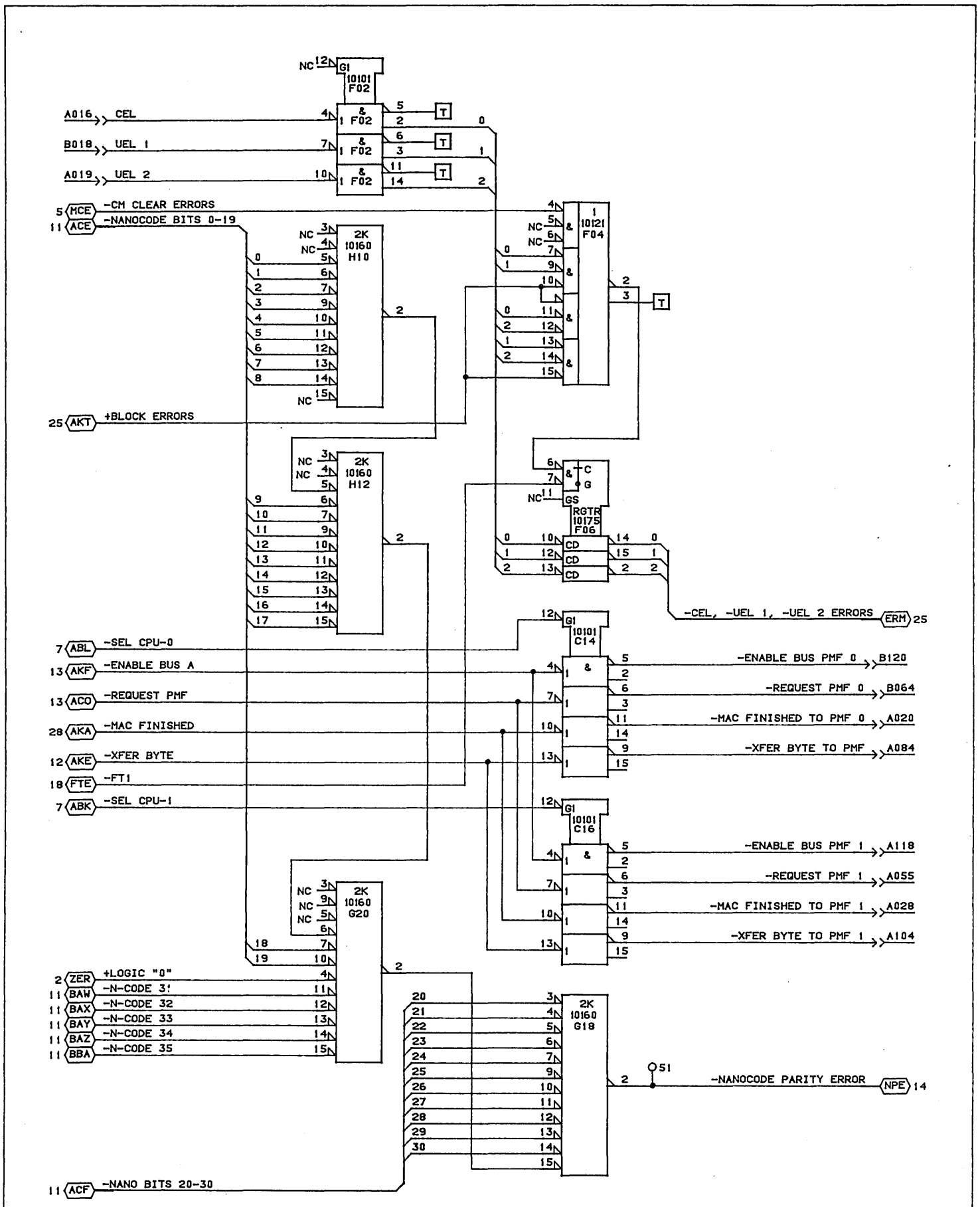

CONTROL DATA CANADA LTD	1DQ0 NANOCODE PARITY CHECK	C		B
		23-APR-85	SHEET 29	

MEM PANEL

SHEET REVISION STATUS																									REVISION RECORD						
24	23	22	21	20	19	18	17	16	15	14	13	12	11	10	9	8	7	6	5	4	3	2	1	REV	ECO	DESCRIPTION	DRFT	DATE	CHKD	APP
01	01	01	01	01	01	01	01	01	01	01	01	01	01	01	01	01	01	01	01	01	01	01	01	01	———	INITIAL RELEASE	LRH	3-13-81	D.G. 3-20-81	Y.S. 3-20-81
01	01	01	01	01	01	01	01	01	01	01	01	01	01	01	01	01	01	02	02	02	02	02	02	02	CA42550	CONNECTOR PINOUT CHG.	D.D.	8/19/81	[illegible]	[illegible]
03	03	03	03	03	03	03	03	03	03	03	03	03	03	03	03	03	03	03	03	03	03	03	03	03	CA42626	RENUMBER CKT LOC	LRH	10-26-81	[illegible]	Y.S.
A	A	A	A	A	A	A	A	A	A	A	A	A	A	A	A	A	A	A	A	A	A	A	A	A	CA42944	CLASS A DRAWING	TK	12/15/83	[illegible]	[illegible]

1. CONNECTOR PIN ASSIGNMENTS SHOWN ON SHT 2
2. NO ECL TERMINATIONS SHOWN
3. UNUSED GATES (DESIGNATED BY EITHER A SINGLE INPUT OR OUTPUT): A42-5, B42-14, B40-2, B40-3, C44-10
4. UNUSED BUT COMMITTED GATES (DESIGNATED BY EITHER A SINGLE INPUT OR OUTPUT): D44-2, D44-3, E44-2, E44-3
5. NOT USED ON 64KX72 (ODNH-1/2 POPULATED MODULE)
6. LAST ⬡ USED FP ON PAGE 5
7. ADDRESS BITS

SYMBOL USED ON THIS SCHEMATIC	NOMENCLATURE AND USAGE USAGE ROW/COLUMN RAM ADDRESS BIT	
A0	A0/A8	ADDRESS BITS MULTIPLEXED BETWEEN RAM ROW AND COLUMN ADDRESSES AS SHOWN
A1	A1/A9	
A2	A2/A10	
A3	A3/A11	
A4	A4/A12	
A5	A5/A13	
A6	A6/A14	
A7	A7/A15	
A8	A16	HIGHEST ORDER ADDRESS BIT THAT SELECTS RAS0,1 OUTPUT (SEE SHT 6) AND MUST BE STABLE THE ENTIRE MEMORY CYCLE.

INTER-DIVISIONAL DOCUMENT
Changes to this document require approval of all Using Divisions per CDC-STD 1.01.024. PD
AAL030 PRINTED IN U.S.A.

DETACHED LISTS

UNLESS OTHERWISE SPECIFIED DIMENSIONS ARE IN INCHES TOLERANCES
2 PLACE ± 2 PLACE ± ANGLES ±
DO NOT SCALE DRAWING
MATERIAL
FINISH

CONTROL DATA

FIRST USED ON	MI	
DWN	L R HILL	3-13-81
CHKD	D. GABOURY	3-20-81
ENGR	Y Siplema	3-20-81
MFG	[illegible]	4-2-81
APPR	Y Siplema	3-20-81

TITLE
SCHEMATIC
128K X 72, 64K X 72
ODPH, ODNH MI MEMORY MODULES

CODE IDENT 34010 | C | DRAWING NO

SCALE | SHEET 1 OF 24

CONNECTOR PIN ASSIGNMENTS

SIG. NAME	B PIN NO.	A PIN NO.	SIGNAL NAME	SIG. NAME	B PIN NO.	A PIN NO.	SIGNAL NAME
-5.2V	B1	A1	-5.2V	NC (+12V) (3)	B66	A66	NC (+12V) (3)
-5.2V	B2	A2	-5.2V	BIT 40	B67	A67	T
BOARD SEL	B3	A3	GND	GND	B68	A68	GND
T	B4	A4	OPEN/GND (1)	BIT 41	B69	A69	T
GND	B5	A5	GND	+5V	B70	A70	+5V
T	B6	A6	T	BIT 42	B71	A71	T
-2.2V	B7	A7	-2.2V	GND	B72	A72	GND
-2.2V	B8	A8	-2.2V	BIT 43	B73	A73	T
T (4)	B9	A9	T	BIT 44	B74	A74	T
DATA BIT 0	B10	A10	T	BIT 45	B75	A75	T
GND	B11	A11	GND	GND	B76	A76	GND
BIT 1	B12	A12	T	BIT 46	B77	A77	T
BIT 2	B13	A13	T	BIT 47	B78	A78	T
BIT 3	B14	A14	T	BIT 48	B79	A79	T
GND	B15	A15	GND	GND	B80	A80	GND
BIT 4	B16	A16	T	BIT 49	B81	A81	T
BIT 5	B17	A17	T	BIT 50	B82	A82	T
BIT 6	B18	A18	T	BIT 51	B83	A83	T
GND	B19	A19	GND	GND	B84	A84	GND
BIT 7	B20	A20	T	BIT 52	B85	A85	T
BIT 8	B21	A21	T	BIT 53	B86	A86	T
BIT 9	B22	A22	T	BIT 54	B87	A87	T
GND	B23	A23	GND	GND	B88	A88	GND
BIT 10	B24	A24	T	BIT 55	B89	A89	T
BIT 11	B25	A25	T	BIT 56	B90	A90	T
BIT 12	B26	A26	T	BIT 57	B91	A91	T
GND	B27	A27	GND	GND	B92	A92	GND
BIT 13	B28	A28	T	BIT 58	B93	A93	T
BIT 14	B29	A29	T	BIT 59	B94	A94	T
BIT 15	B30	A30	T	BIT 60	B95	A95	T
GND	B31	A31	GND	GND	B96	A96	GND
BIT 16	B32	A32	T	BIT 61	B97	A97	T
BIT 17	B33	A33	T	BIT 62	B98	A98	T
BIT 18	B34	A34	T	BIT 63	B99	A99	T
GND	B35	A35	GND	GND	B100	A100	GND
BIT 19	B36	A36	T	BIT 64	B101	A101	T
BIT 20	B37	A37	T	BIT 65	B102	A102	T
BIT 21	B38	A38	T	BIT 66	B103	A103	T
GND	B39	A39	GND	GND	B104	A104	GND
BIT 22	B40	A40	T	BIT 67	B105	A105	T
BIT 23	B41	A41	T	BIT 68	B106	A106	T
BIT 24	B42	A42	T	BIT 69	B107	A107	T
GND	B43	A43	GND	GND	B108	A108	GND
BIT 25	B44	A44	T	BIT 70	B109	A109	T
BIT 26	B45	A45	T	BIT 71	B110	A110	T
BIT 27	B46	A46	T	A1	B111	A111	A0
GND	B47	A47	GND	GND	B112	A112	GND
BIT 28	B48	A48	T	A3	B113	A113	A2
BIT 29	B49	A49	T	A5	B114	A114	A4
BIT 30	B50	A50	T	T	B115	A115	T-FUTURE ADDRESS2
GND	B51	A51	GND	GND	B116	A116	GND
BIT 31	B52	A52	T	REFRESH	B117	A117	A6
BIT 32	B53	A53	T	T	B118	A118	WRITE
BIT 33	B54	A54	T	RAS	B119	A119	CAS
GND	B55	A55	GND	GND	B120	A120	GND
BIT 34	B56	A56	T	A8	B121	A121	DATA GATE
BIT 35	B57	A57	T	T	B122	A122	A7
BIT 36	B58	A58	T	-2.2V	B123	A123	-2.2V
GND	B59	A59	GND	-2.2V	B124	A124	-2.2V
BIT 37	B60	A60	T	T	B125	A125	T
+5V	B61	A61	+5V	GND	B126	A126	GND
BIT 38	B62	A62	T	T	B127	A127	T
GND	B63	A63	GND	T	B128	A128	T
BIT 39	B64	A64	T	-5.2V	B129	A129	-5.2V
NC (+12V) (3)	B65	A65	NC (+12V) (3)	-5.2V	B130	A130	-5.2V

NOTES:

1. OPEN ON ODPH MEMORY MODULE ASSEMBLY, FULLY POPULATED, TERMINATED (53702671)
   GND ON ODNH MEMORY MODULE ASSEMBLY, 1/2 POPULATED, TERMINATED (53702670)
2. PRINTED WIRING BOARD FOIL PROVIDES THE OPTION TO CONNECT A115 TO A42 PIN 13 BY ADDING A SHORT JUMPER WIRE.
3. EARLY M1 BACK PANELS SUPPLIED +12V ON THESE PINS.
4. T DESIGNATES A CONNECTION TO A 100 OHM TERMINATION TO -2.2V.

CONTROL DATA CORPORATION	SCHEMATIC 128K X 72, 64K X 72 ODPH, ODNH M1 MEMORY MODULES	CODE IDENT 34010	
DEVELOPMENT DIVISION		C	SHEET 2 OF 24 PAGE

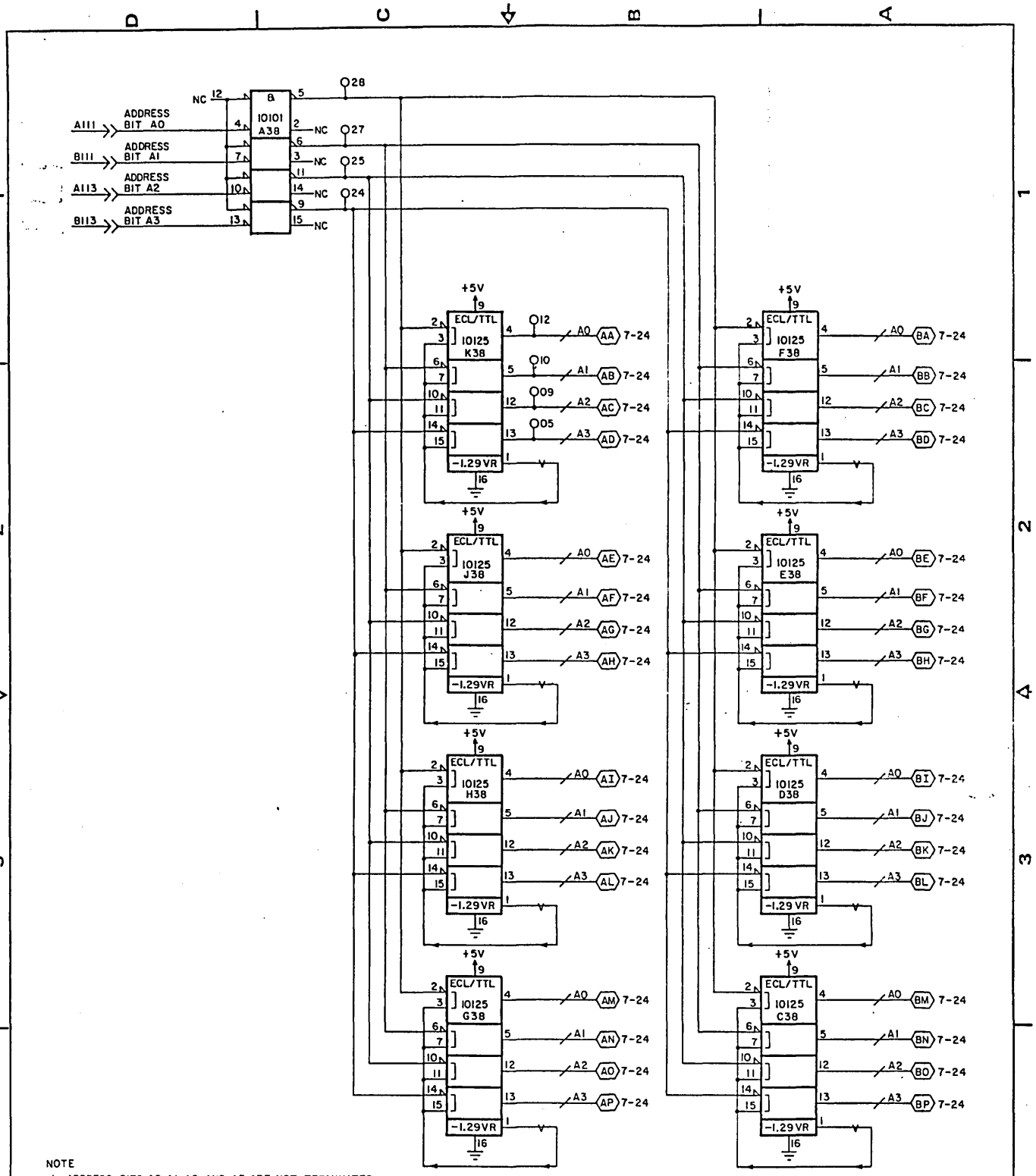

NOTE
1. ADDRESS BITS A0, A1, A2, AND A3 ARE NOT TERMINATED.

CONTROL DATA CORPORATION	SCHEMATIC 128K X 72, 64K X 72 ODPH, ODNH M1 MEMORY MODULES	CODE IDENT 34010	
DEVELOPMENT DIVISION		C	SHEET 3 OF 24 PAGE

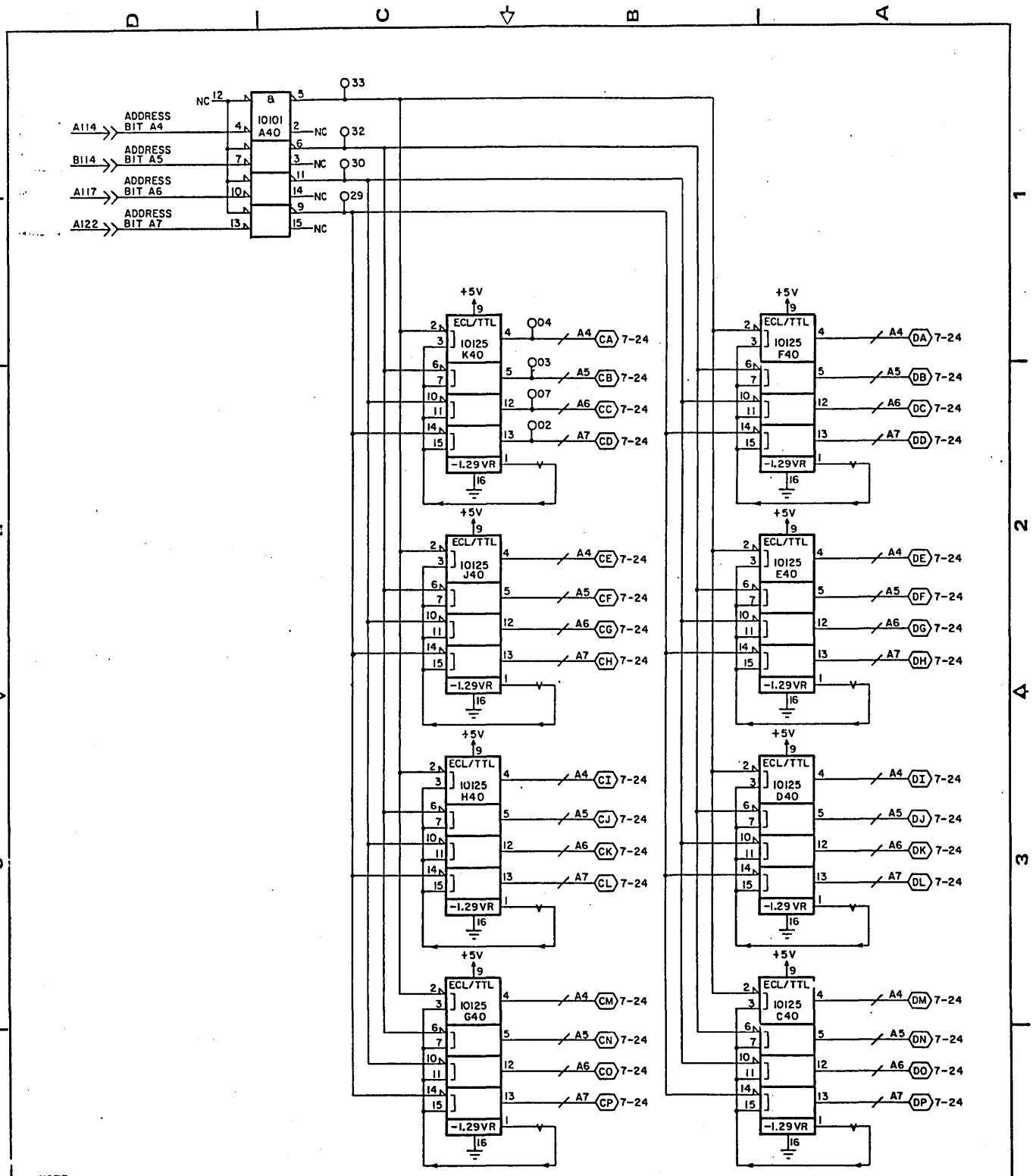

NOTE

1. ADDRESS BITS A4,A5,A6,AND A7 ARE NOT TERMINATED.

CONTROL DATA CORPORATION	SCHEMATIC 128K X 72, 64K X 72 ODPH, ODNH M1 MEMORY MODULES	CODE IDENT 34010	
DEVELOPMENT DIVISION		C	SHEET 4 OF 24 PAGE

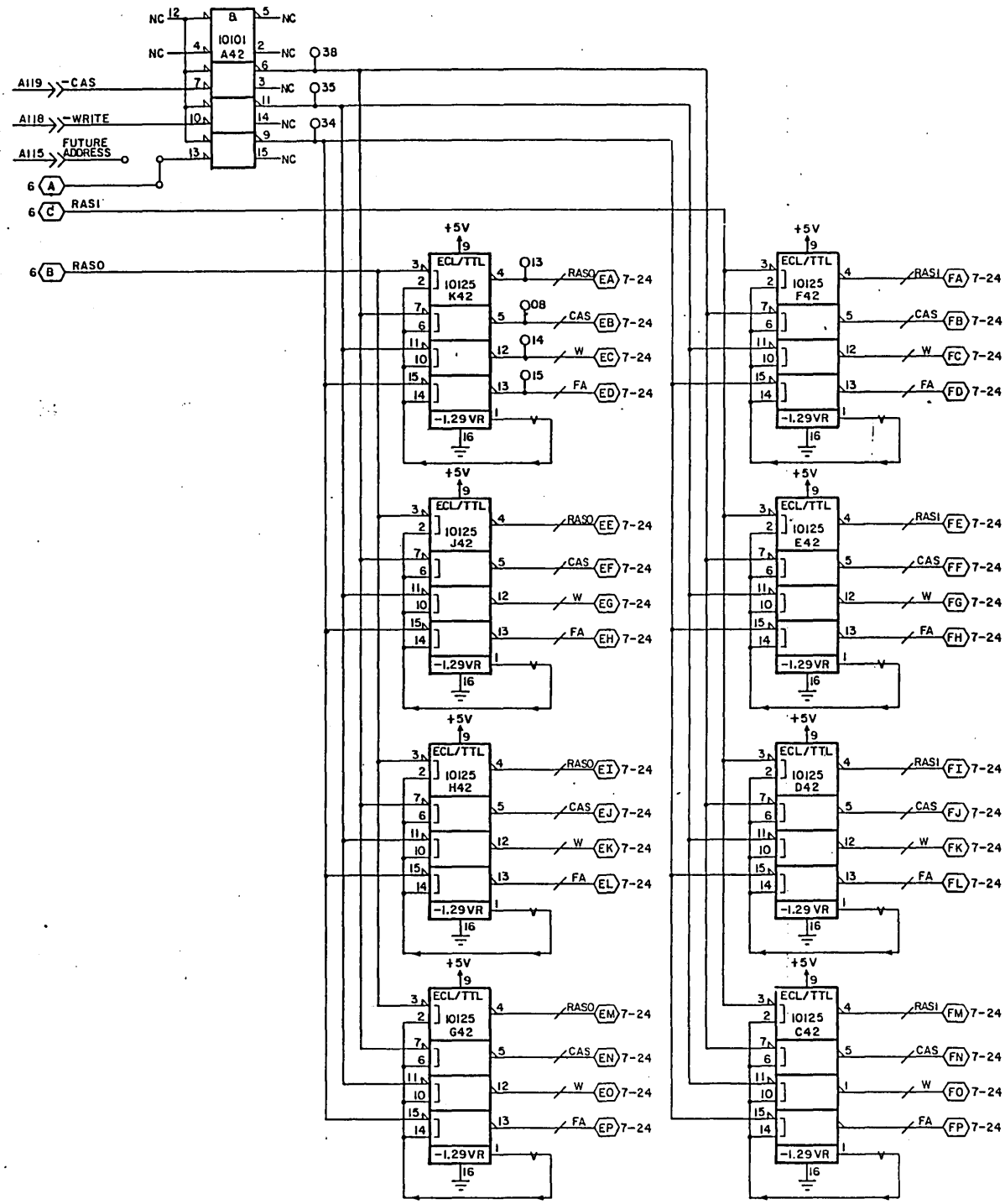

NOTE

1. A42, PIN 13 IS NOT TERMINATED AND CAN BE AN ADDRESS FOR DENSER RAMS.
2. THE CAS INPUT, (A119) AND THE WRITE INPUT, (A118) ARE NOT TERMINATED.

CONTROL DATA CORPORATION	SCHEMATIC 128K X 72, 64K X 72 ODPH, ODNH MI MEMORY MODULES	CODE IDENT 34010	
DEVELOPMENT DIVISION		C	SHEET 5 OF 24 PAGE

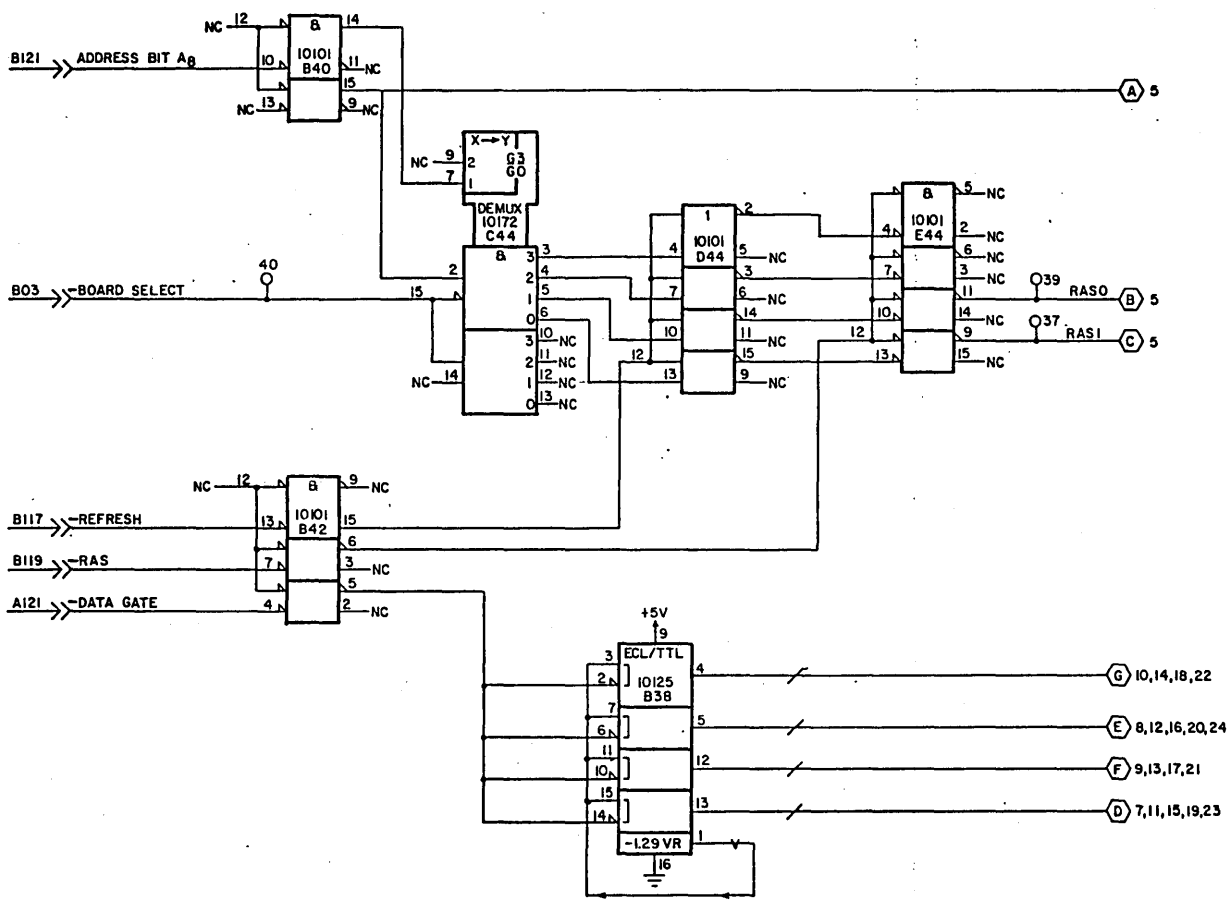

NOTES:

1. C44, PIN 2 (10172) IS NOT TERMINATED - SO INPUT A42 PIN 13 (SHT 5) CAN BE AN ADDRESS FOR DENSER RAMS.
2.

B121(A8) VOLTAGE	RAS ENABLED
-1.8 ("1")	RAS 0
-0.8 ("0")	RAS 1

3. ADDRESS BIT A8 (B121), REFRESH (B117), AND RAS (B119) ARE NOT TERMINATED.
4. BOARD SELECT (B03) AND DATA GATE (A121) ARE TERMINATED.

CONTROL DATA CORPORATION DEVELOPMENT DIVISION	SCHEMATIC 128K X 72, 64K X 72 ODPH, ODNH MI MEMORY MODULES	CODE IDENT 34010 C	SHEET 6 OF 24 PAGE

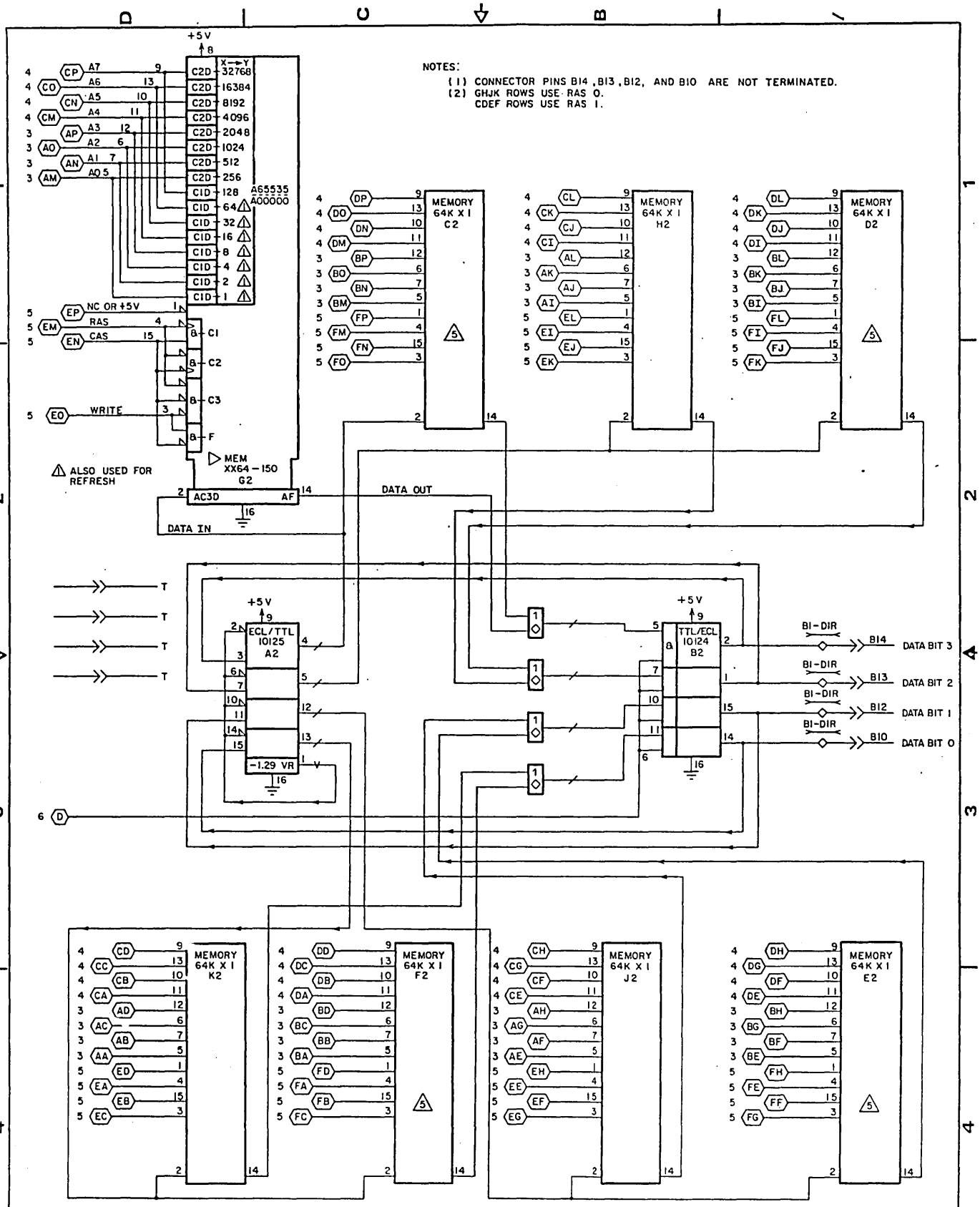

CONTROL DATA CORPORATION DEVELOPMENT DIVISION	SCHEMATIC 128KX72, 64KX72 ODPH, ODNH MI MEMORY MODULES	CODE IDENT 34010 C	SHEET 7 OF 24 PAGE

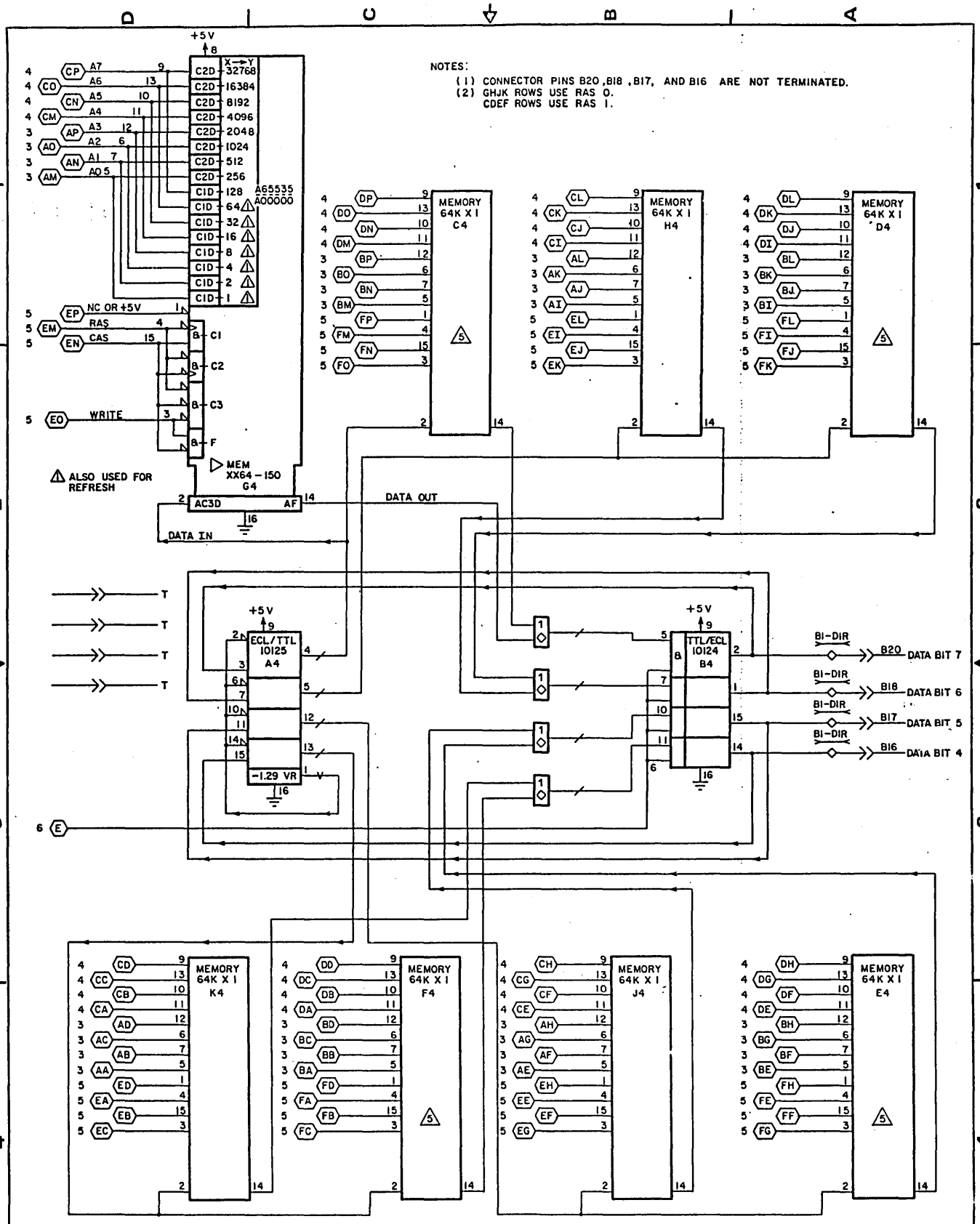

CONTROL DATA CORPORATION	SCHEMATIC 128KX72, 64KX72 ODPH, ODNH MI MEMORY MODULES	CODE IDENT 34010	
DEVELOPMENT DIVISION		C	SHEET 8 OF 24 PAGE

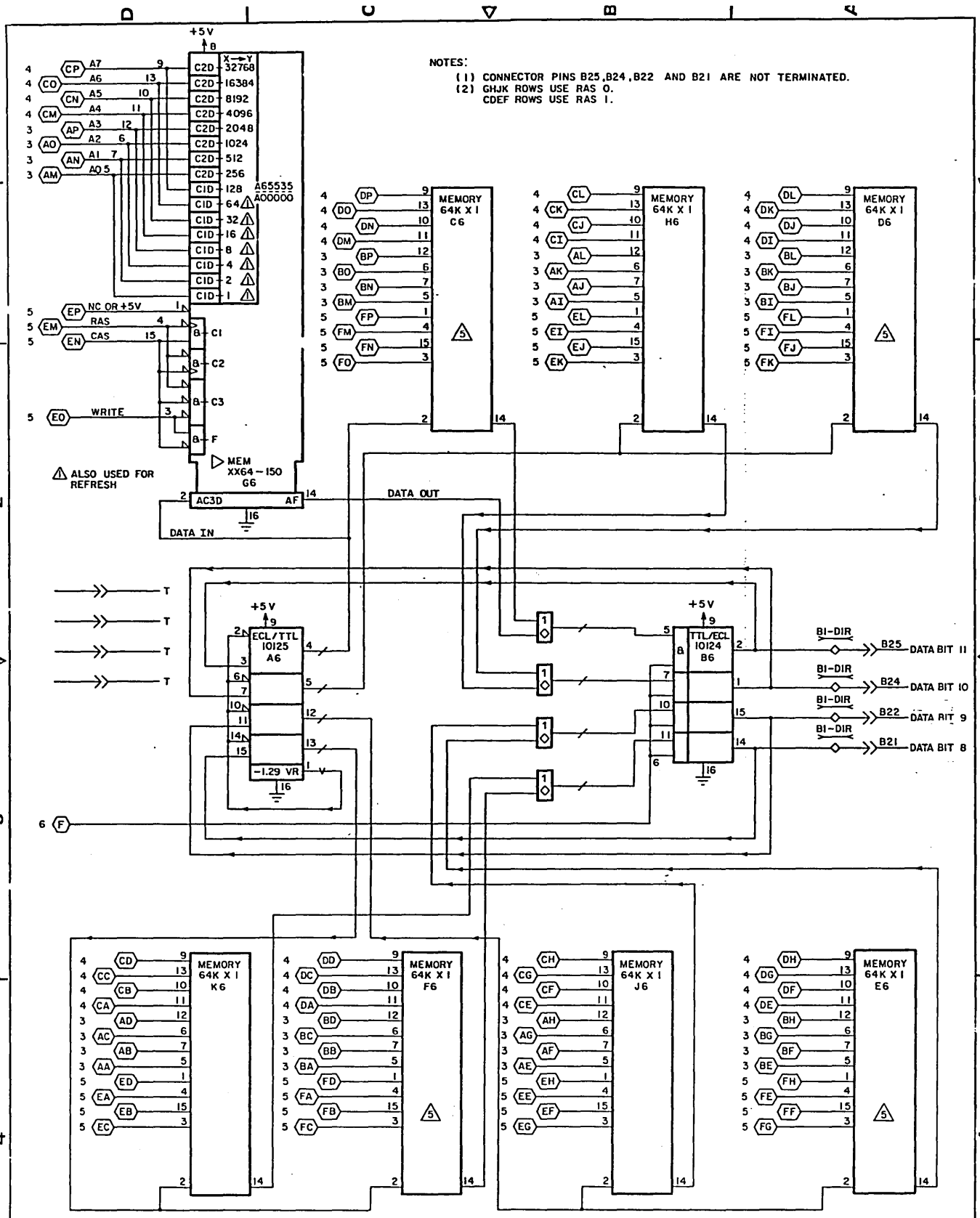

CONTROL DATA CORPORATION	SCHEMATIC 128KX72, 64KX72 ODPH, ODNH MI MEMORY MODULES	CODE IDENT 34010	
DEVELOPMENT DIVISION		C	SHEET 9 OF 24 PAGE

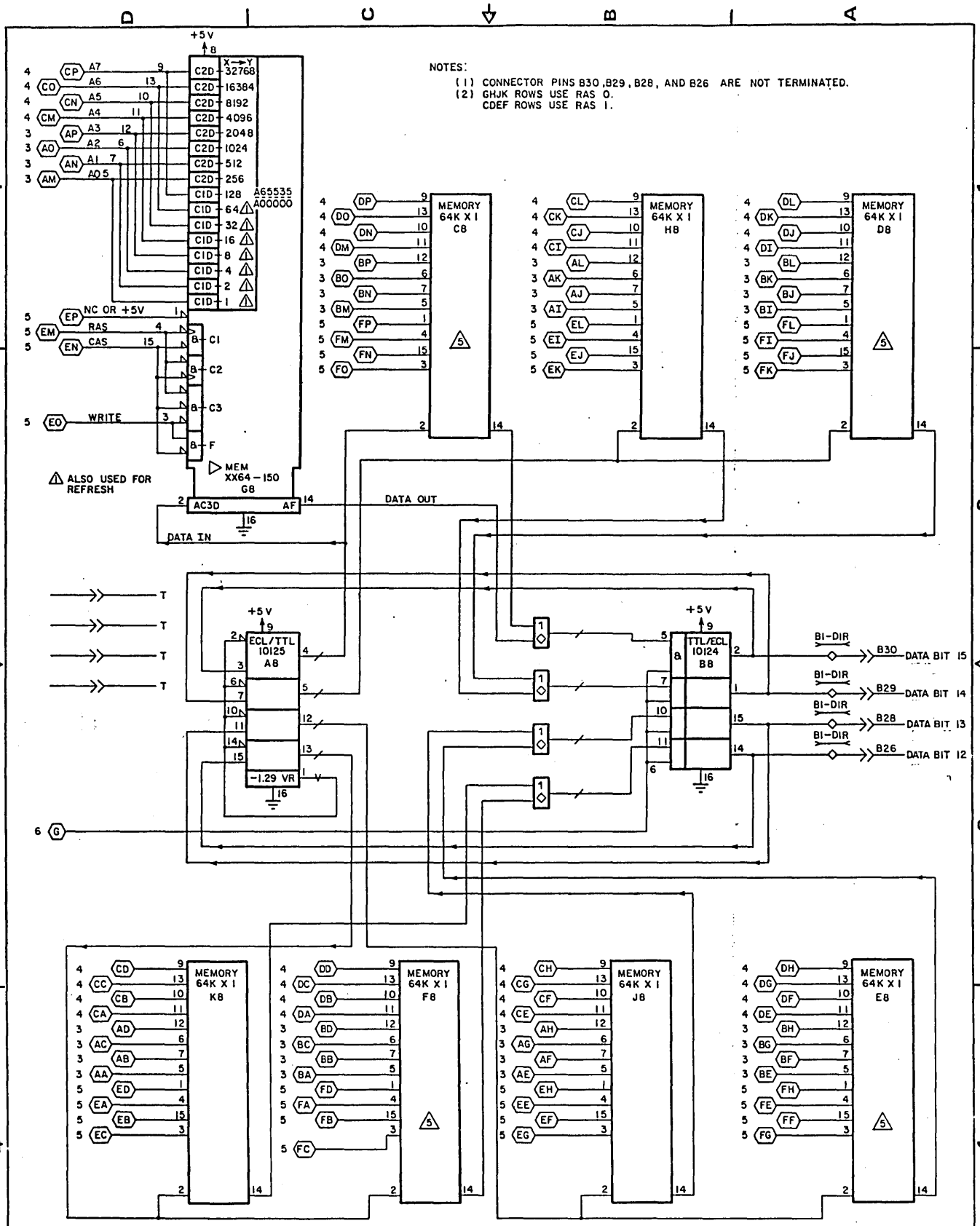

CONTROL DATA CORPORATION	SCHEMATIC 128KX72, 64KX72 ODPH, ODNH MI MEMORY MODULES	CODE IDENT 34010	
DEVELOPMENT DIVISION		C	SHEET 10 OF 24 PAGE

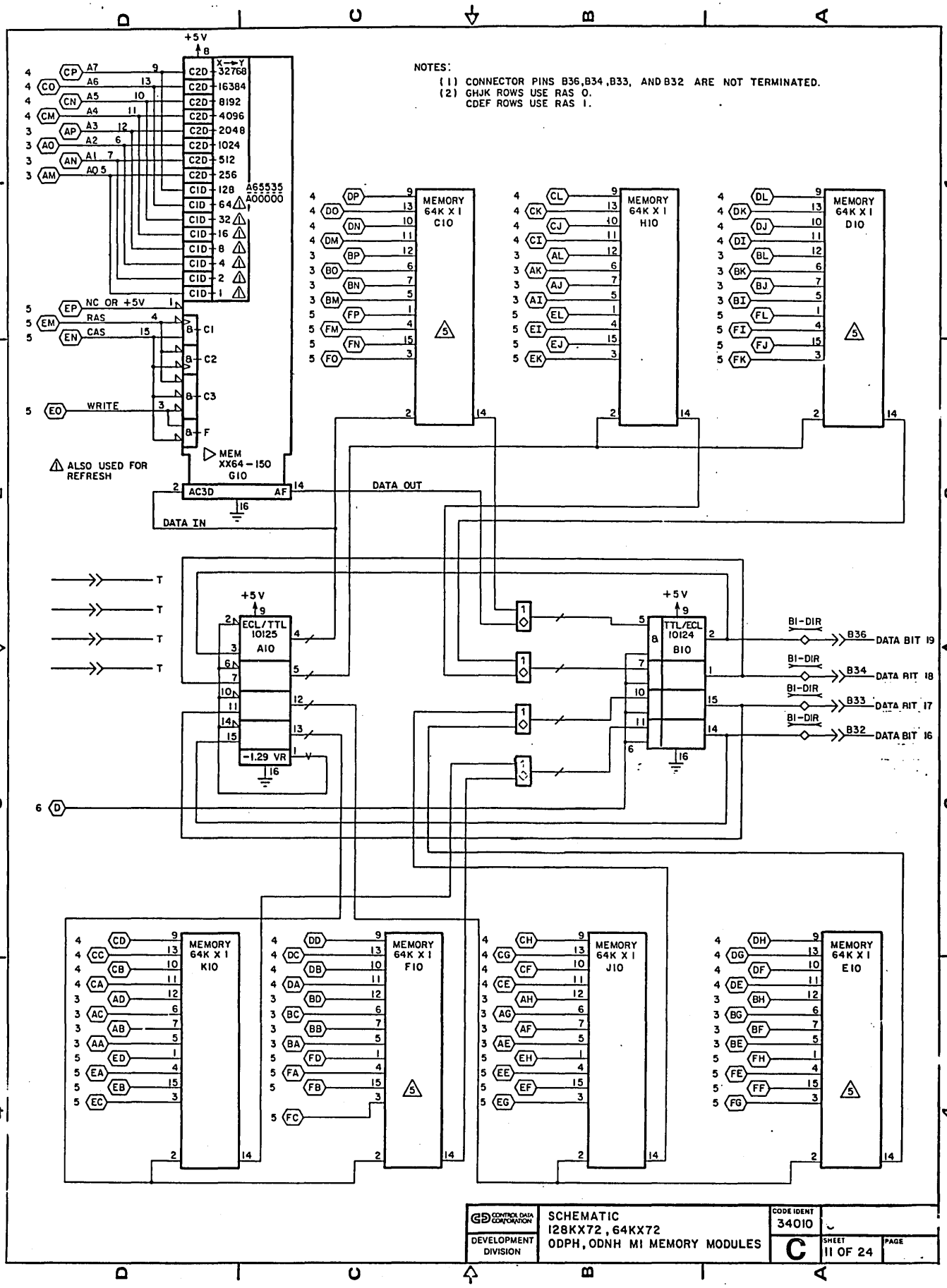

CONTROL DATA CORPORATION DEVELOPMENT DIVISION	SCHEMATIC 128KX72, 64KX72 ODPH, ODNH MI MEMORY MODULES	CODE IDENT 34010 C	SHEET 11 OF 24 PAGE

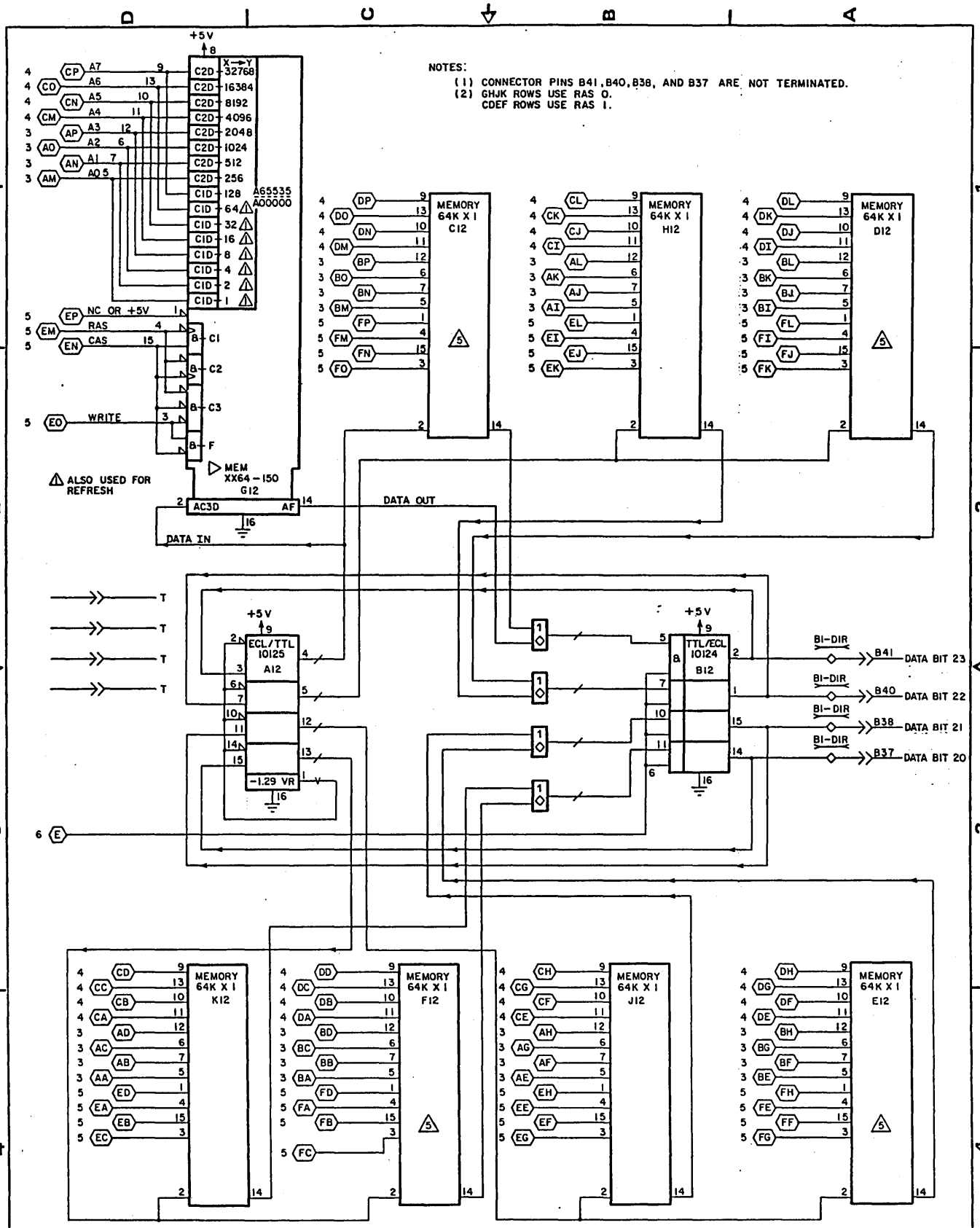

CONTROL DATA CORPORATION	SCHEMATIC 128KX72, 64KX72 ODPH, ODNH MI MEMORY MODULES	CODE IDENT 34010	
DEVELOPMENT DIVISION		C	SHEET 12 OF 24 PAGE

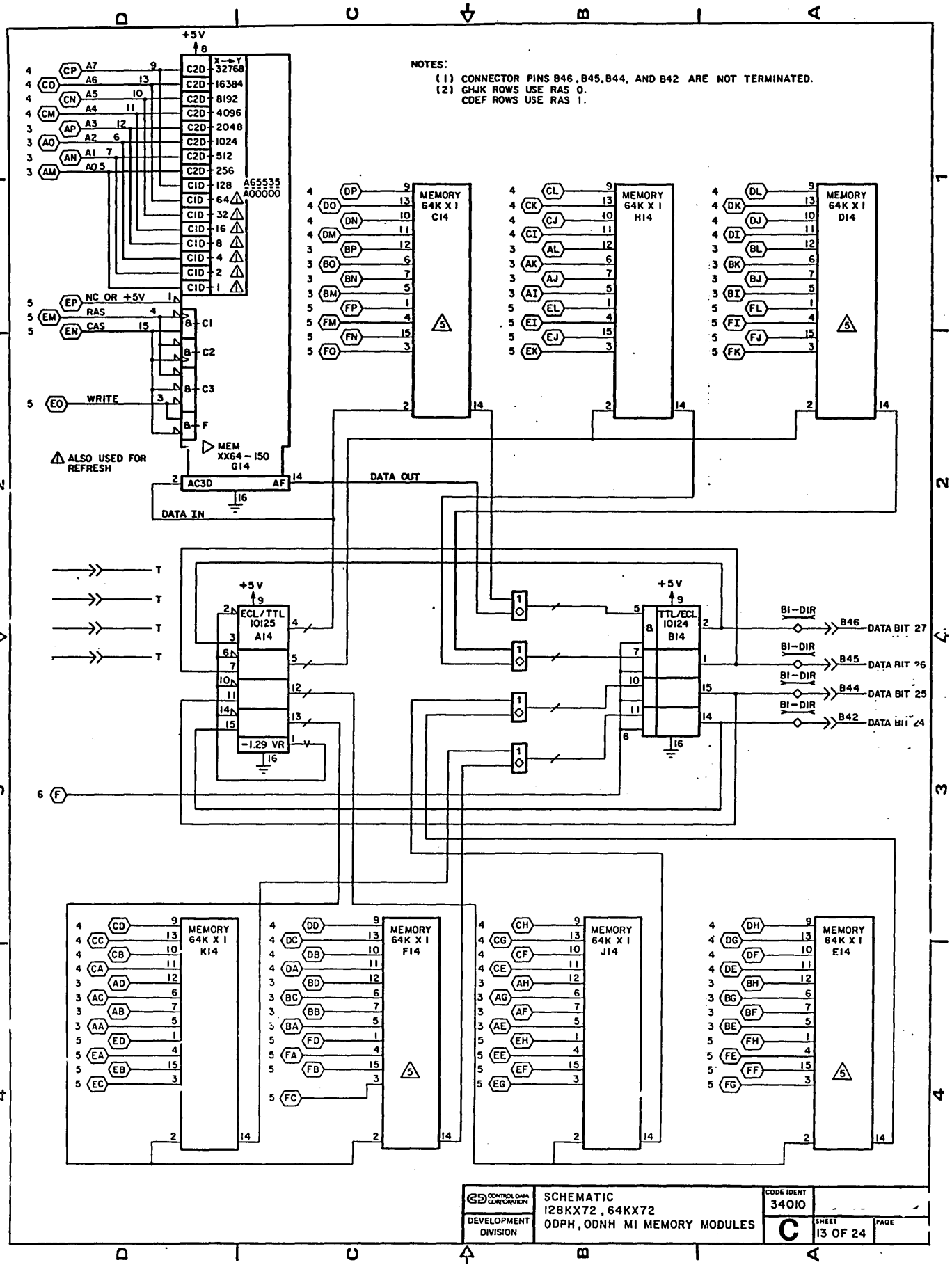

CONTROL DATA CORPORATION	SCHEMATIC 128KX72, 64KX72 ODPH, ODNH MI MEMORY MODULES	CODE IDENT 34010	
DEVELOPMENT DIVISION		C	SHEET 13 OF 24 PAGE

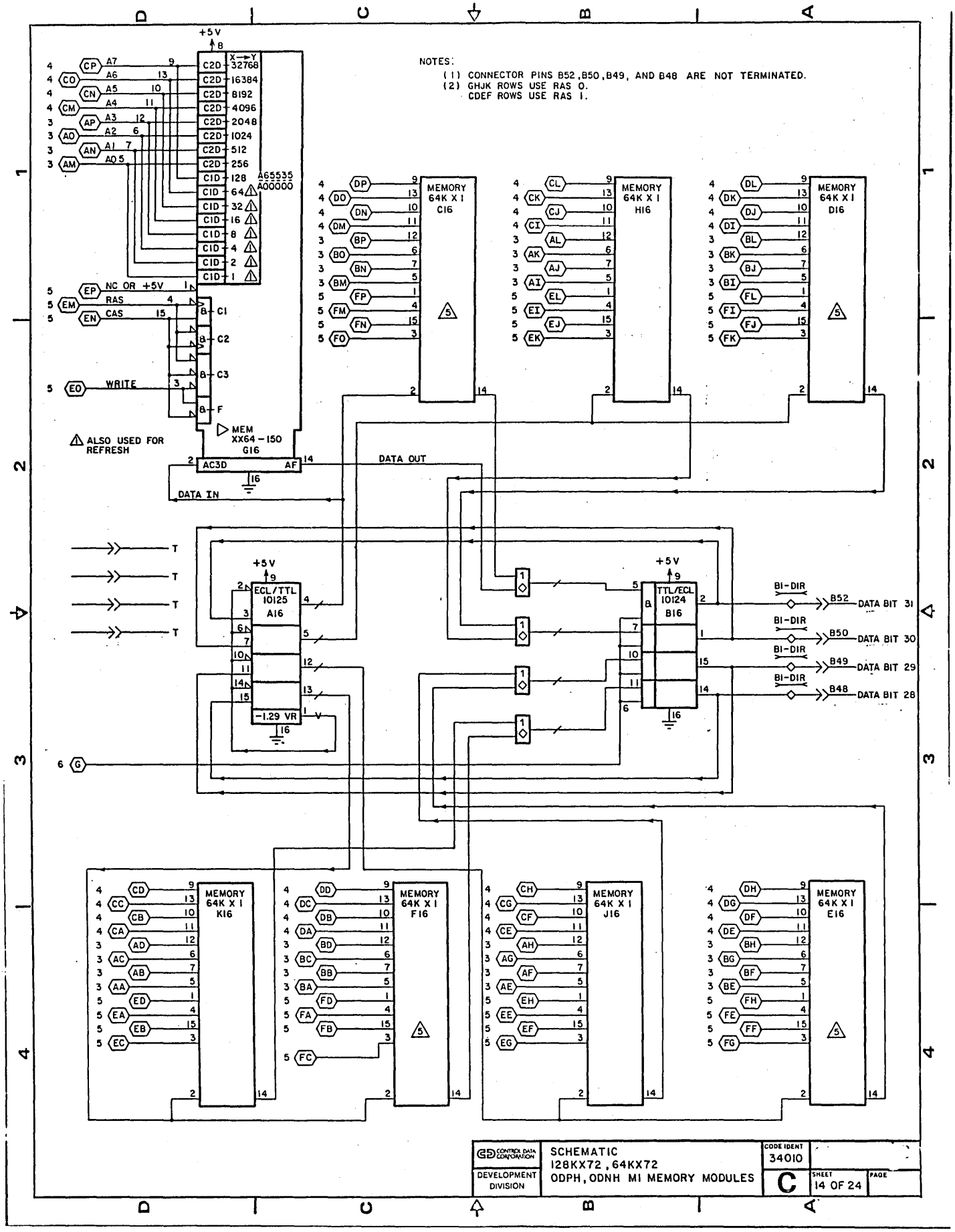

CONTROL DATA CORPORATION	SCHEMATIC	CODE IDENT	
DEVELOPMENT DIVISION	128KX72, 64KX72	34010	
	ODPH, ODNH MI MEMORY MODULES	C	SHEET 14 OF 24 PAGE

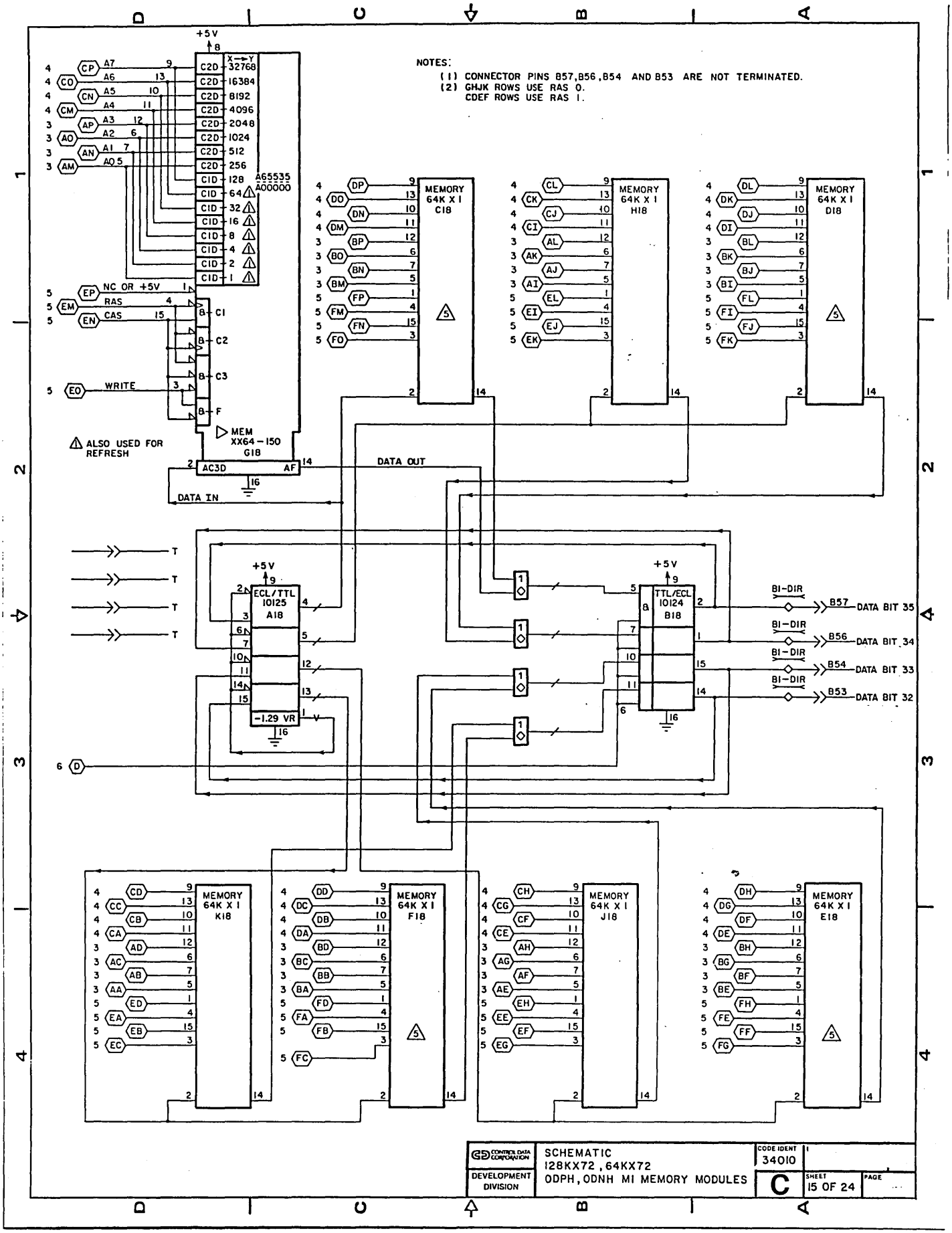
NOTES:
(1) CONNECTOR PINS B57,B56,B54 AND B53 ARE NOT TERMINATED.
(2) GHJK ROWS USE RAS 0.
CDEF ROWS USE RAS 1.
+5V
A65535
A00000
NC OR +5V
RAS
CAS
WRITE
MEM
XX64-150
G18
ALSO USED FOR REFRESH
DATA OUT
DATA IN
MEMORY 64K X 1 C18
MEMORY 64K X 1 H18
MEMORY 64K X 1 D18
ECL/TTL 10125 A18
TTL/ECL 10124 B18
-1.29 VR
BI-DIR
DATA BIT 35
DATA BIT 34
DATA BIT 33
DATA BIT 32
MEMORY 64K X 1 K18
MEMORY 64K X 1 F18
MEMORY 64K X 1 J18
MEMORY 64K X 1 E18
CONTROL DATA CORPORATION
DEVELOPMENT DIVISION
SCHEMATIC
128KX72, 64KX72
ODPH, ODNH MI MEMORY MODULES
CODE IDENT 34010
C
SHEET 15 OF 24
PAGE

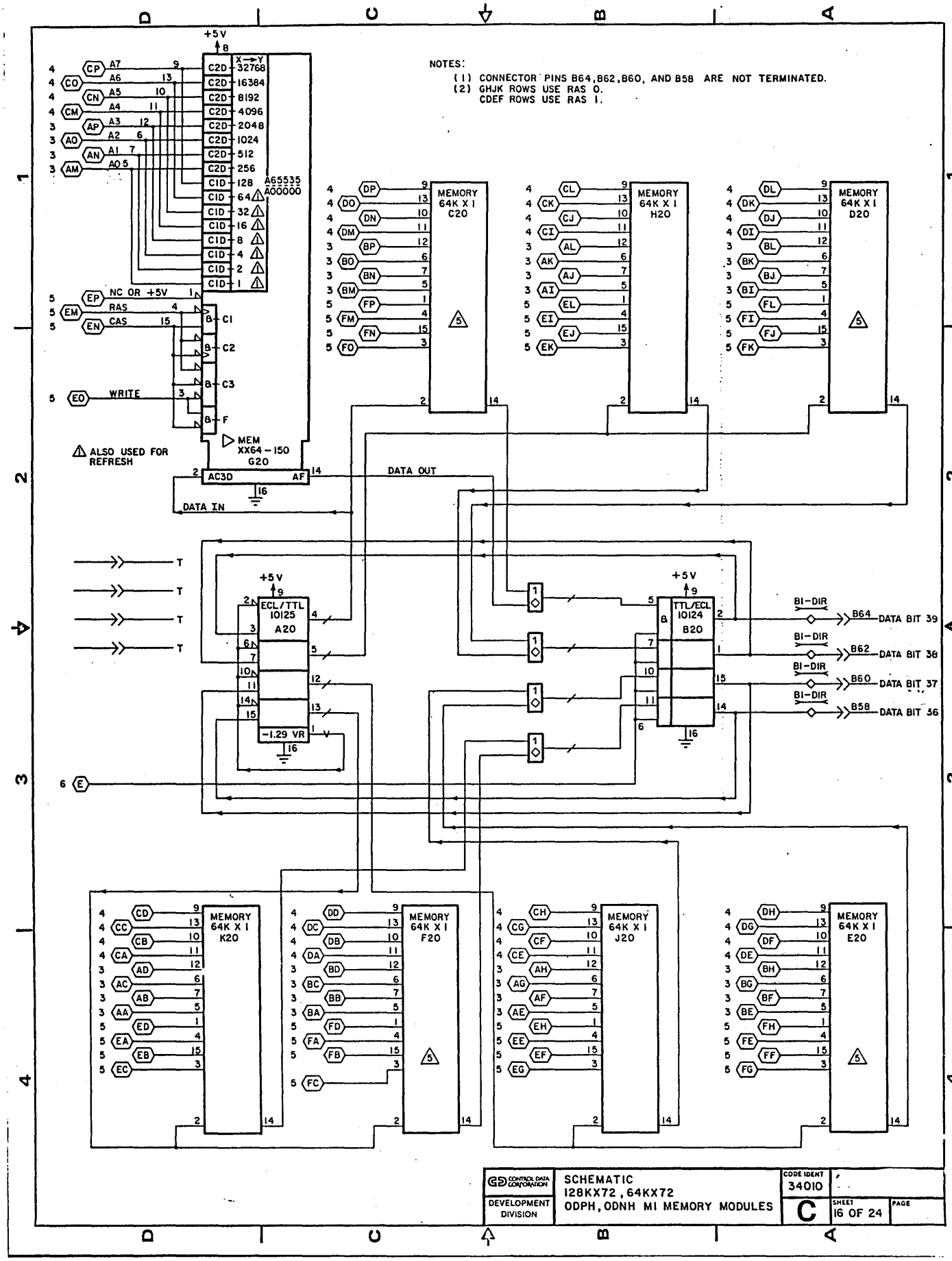

CONTROL DATA CORPORATION DEVELOPMENT DIVISION	SCHEMATIC 128KX72, 64KX72 ODPH, ODNH MI MEMORY MODULES	CODE IDENT 34010 C	SHEET 16 OF 24 PAGE

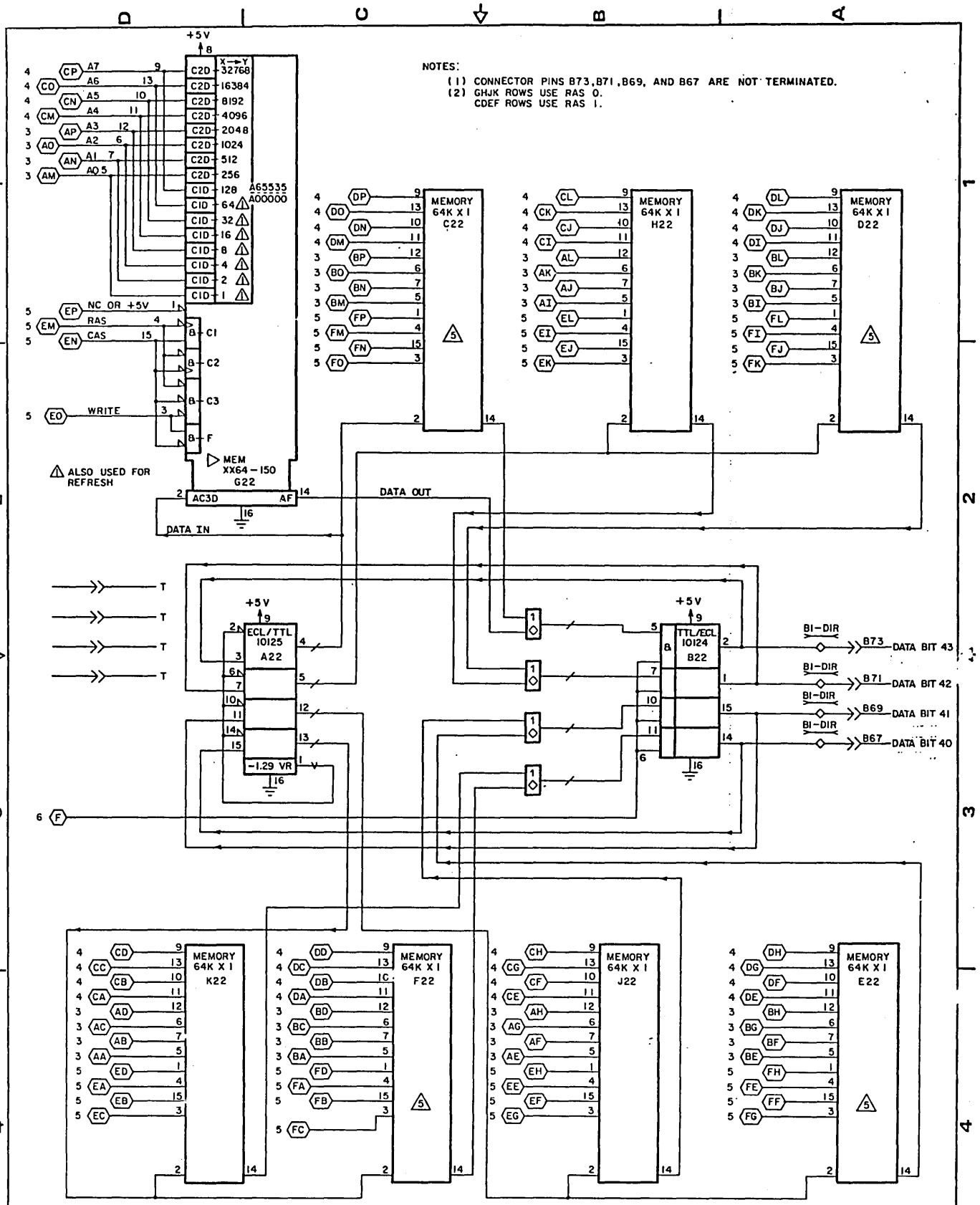

CONTROL DATA CORPORATION	SCHEMATIC 128KX72, 64KX72 ODPH, ODNH MI MEMORY MODULES	CODE IDENT 34010	
DEVELOPMENT DIVISION		C	SHEET 17 OF 24 PAGE

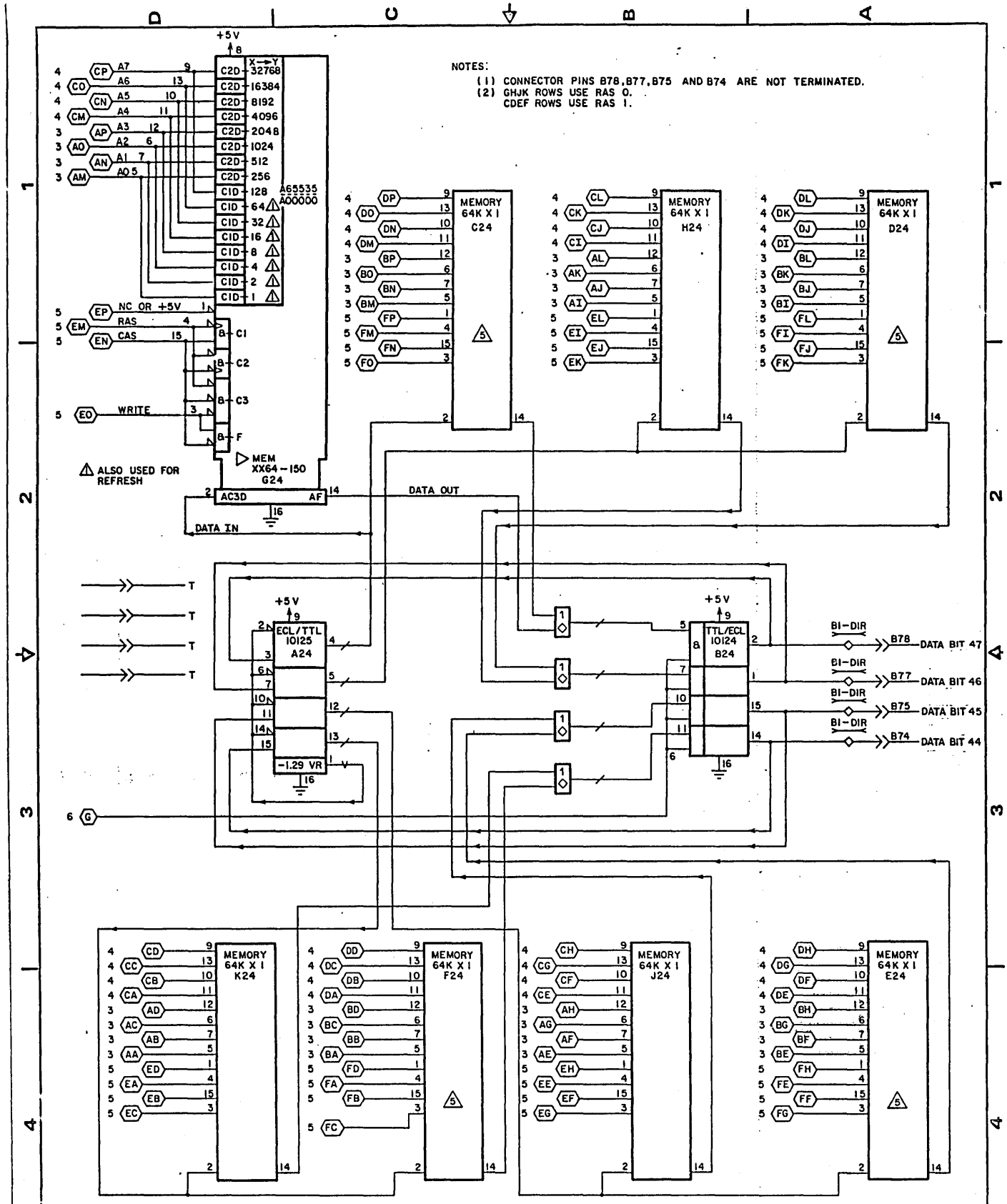

CONTROL DATA CORPORATION	SCHEMATIC 128KX72, 64KX72 ODPH, ODNH MI MEMORY MODULES	CODE IDENT 34010	
DEVELOPMENT DIVISION		C	SHEET 18 OF 24 PAGE

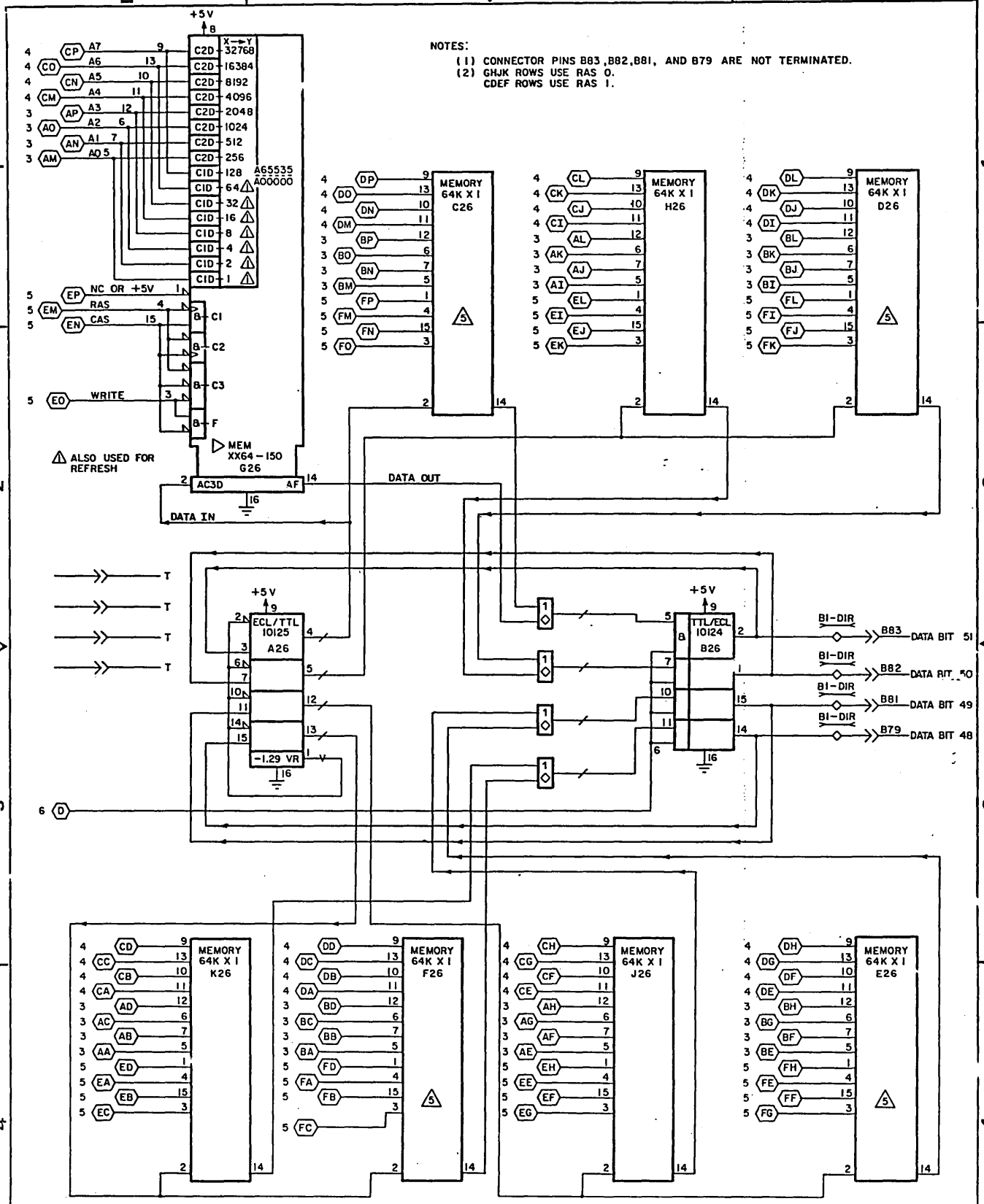

CONTROL DATA CORPORATION DEVELOPMENT DIVISION	SCHEMATIC 128KX72, 64KX72 ODPH, ODNH MI MEMORY MODULES	CODE IDENT 34010 C	SHEET 19 OF 24 PAGE

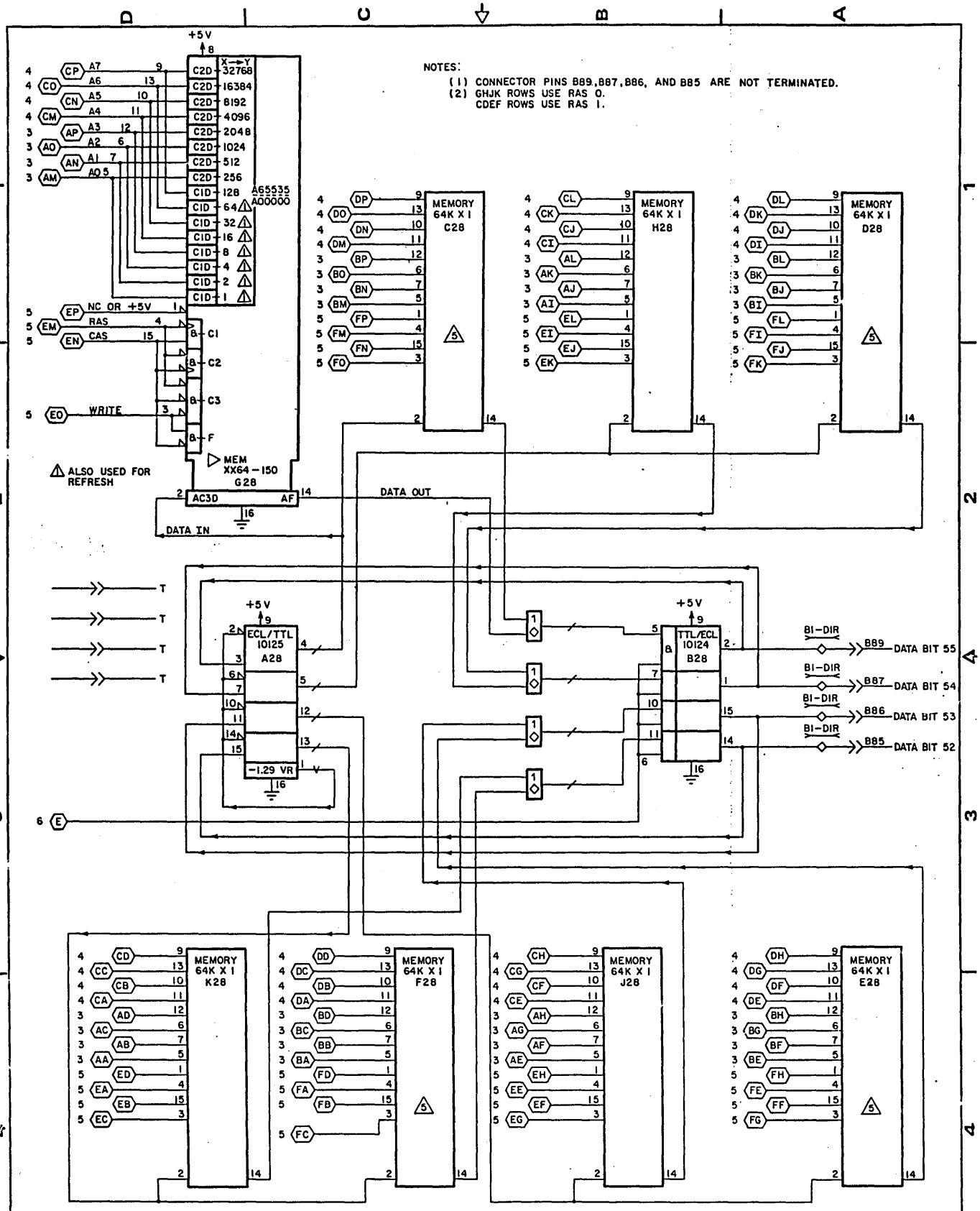

CONTROL DATA CORPORATION	SCHEMATIC 128KX72, 64KX72 ODPH, ODNH MI MEMORY MODULES	CODE IDENT 34010	
DEVELOPMENT DIVISION		C	SHEET 20 OF 24 PAGE

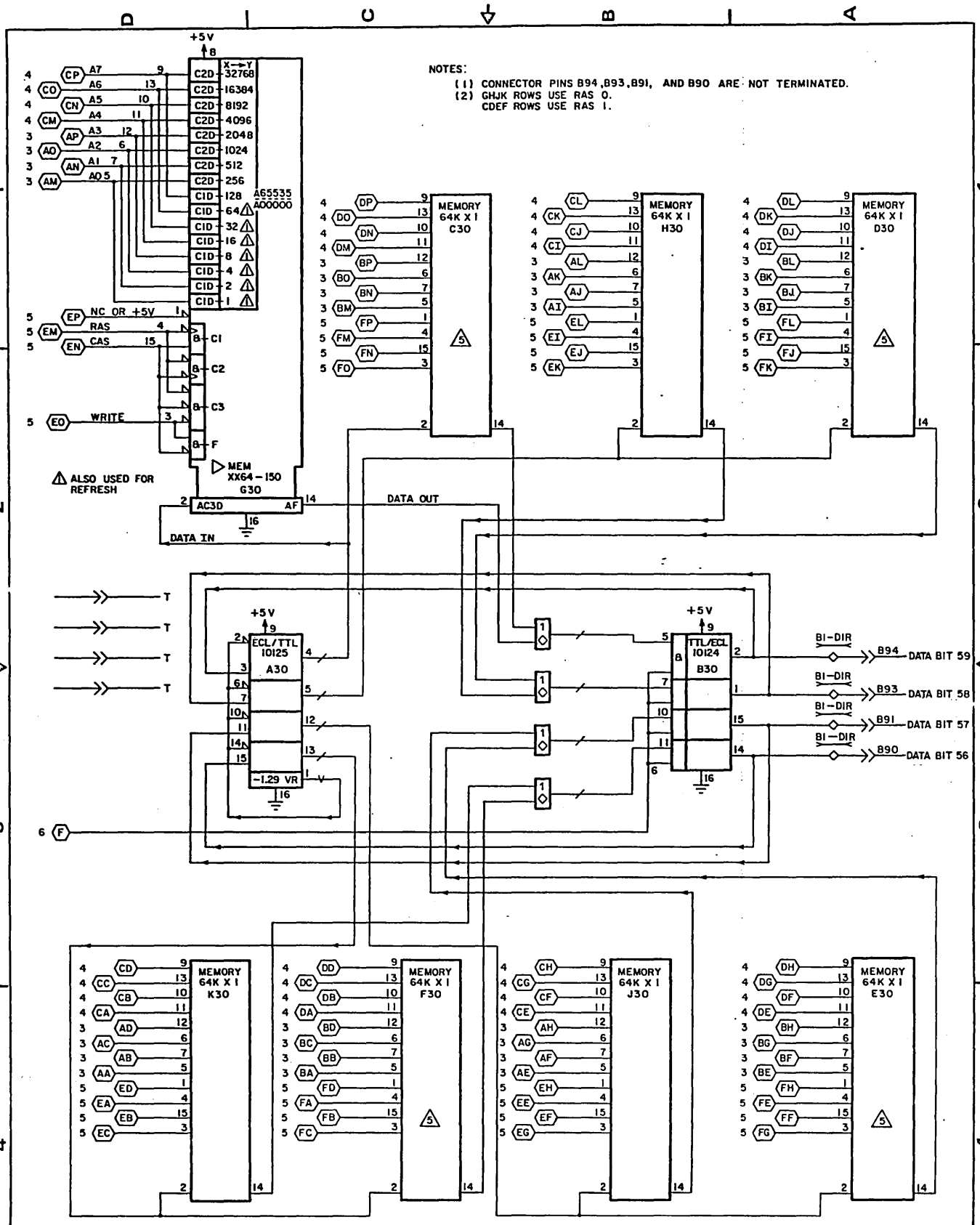

CONTROL DATA CORPORATION	SCHEMATIC 128KX72, 64KX72 ODPH, ODNH MI MEMORY MODULES	CODE IDENT 34010	
DEVELOPMENT DIVISION		C	SHEET 21 OF 24 PAGE

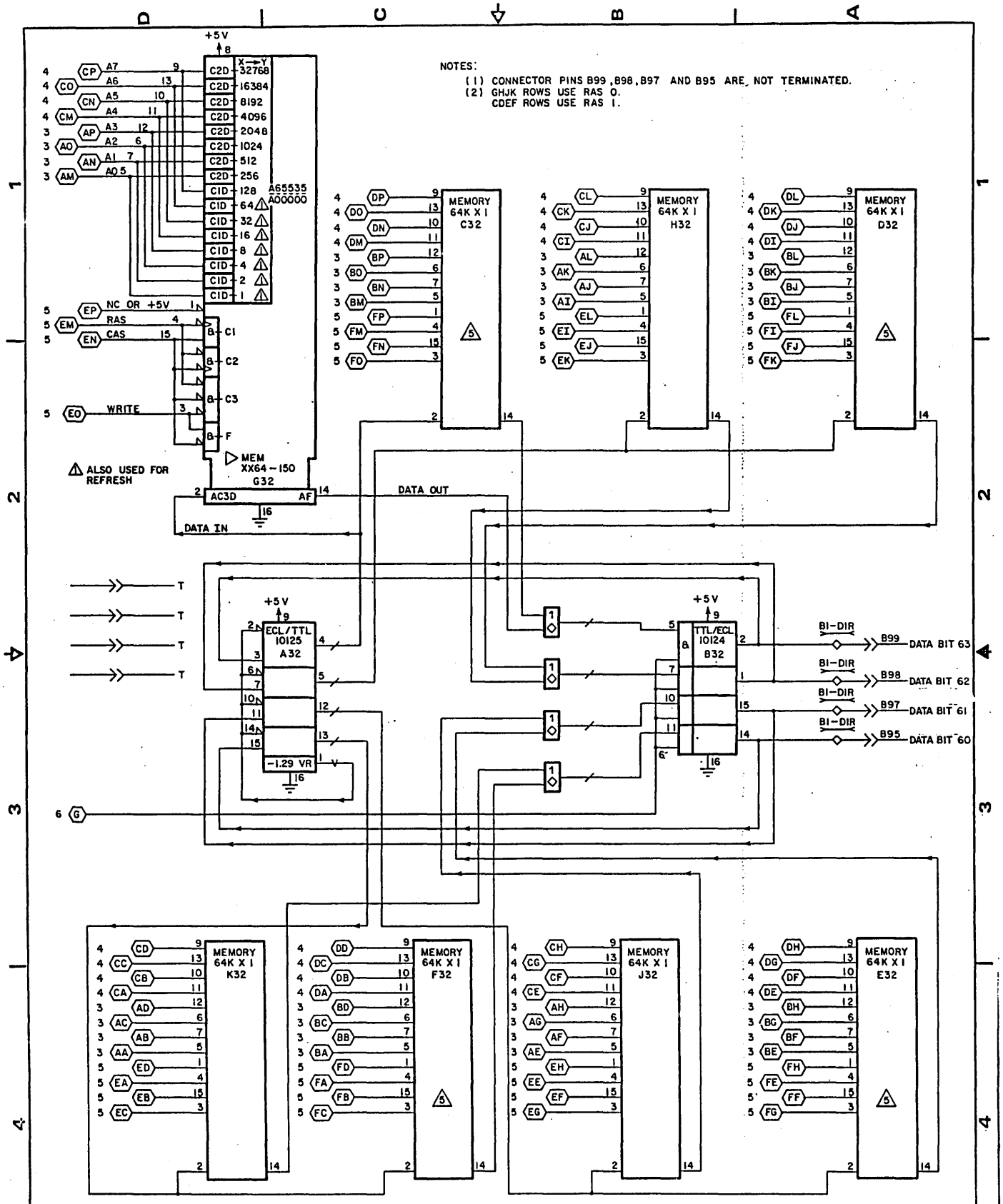

CONTROL DATA CORPORATION	SCHEMATIC 128KX72, 64KX72 ODPH, ODNH MI MEMORY MODULES	CODE IDENT 34010	
DEVELOPMENT DIVISION		C	SHEET 22 OF 24 PAGE

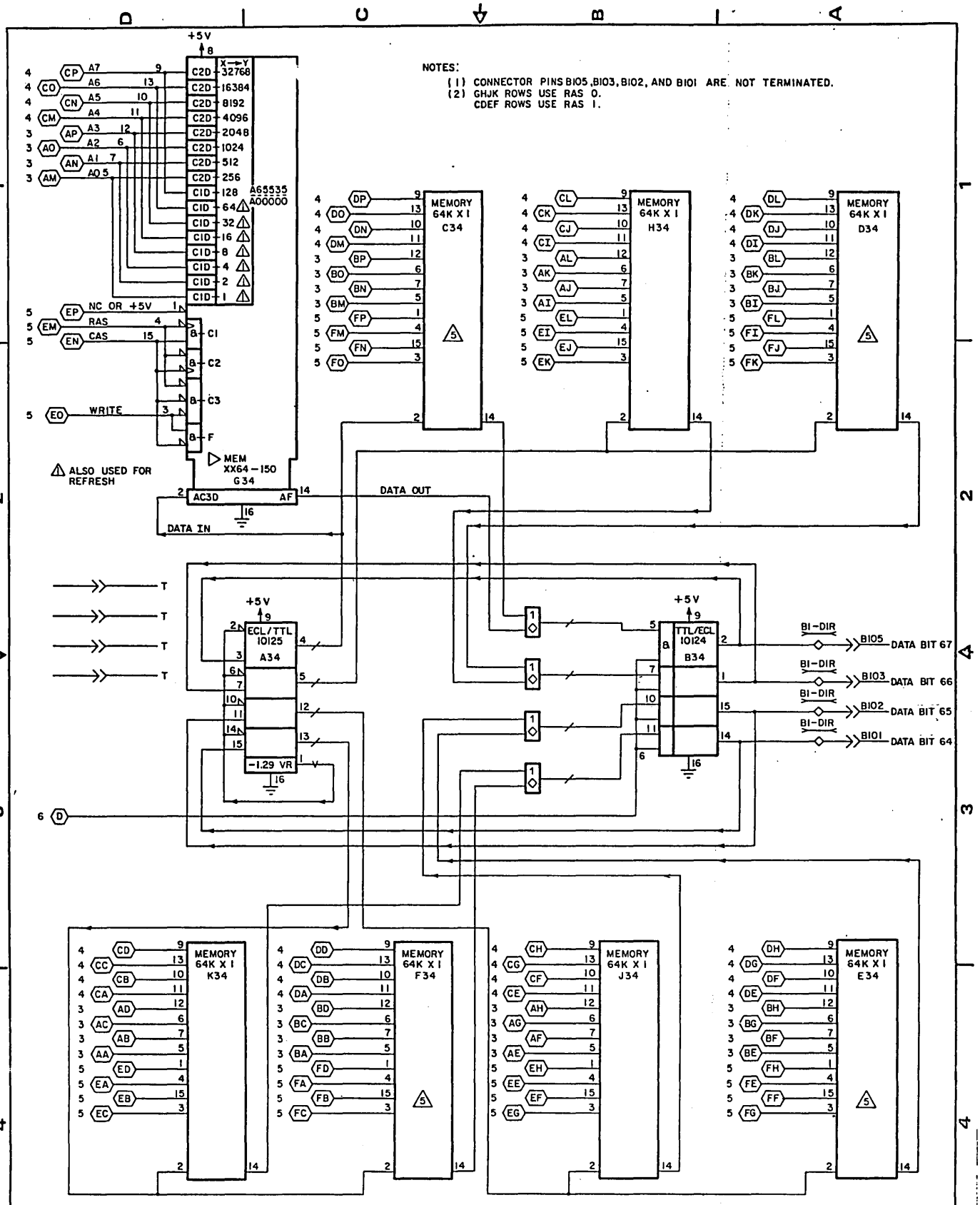

CONTROL DATA CORPORATION	SCHEMATIC	CODE IDENT 34010	
DEVELOPMENT DIVISION	128KX72, 64KX72 ODPH, ODNH MI MEMORY MODULES	C	SHEET 23 OF 24 PAGE

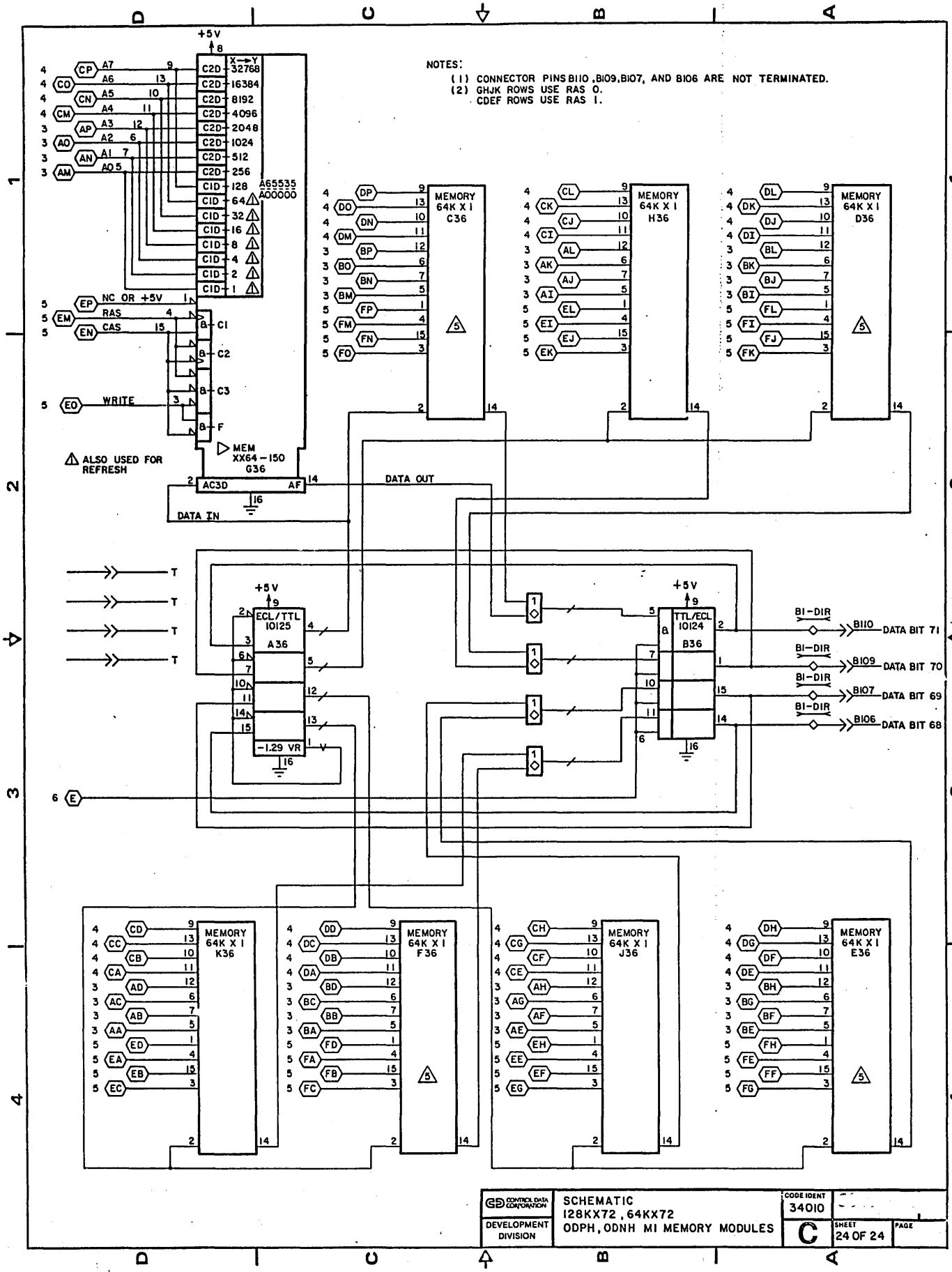

CONTROL DATA CORPORATION	SCHEMATIC 128KX72, 64KX72 ODPH, ODNH MI MEMORY MODULES	CODE IDENT 34010	
DEVELOPMENT DIVISION		C	SHEET 24 OF 24 PAGE

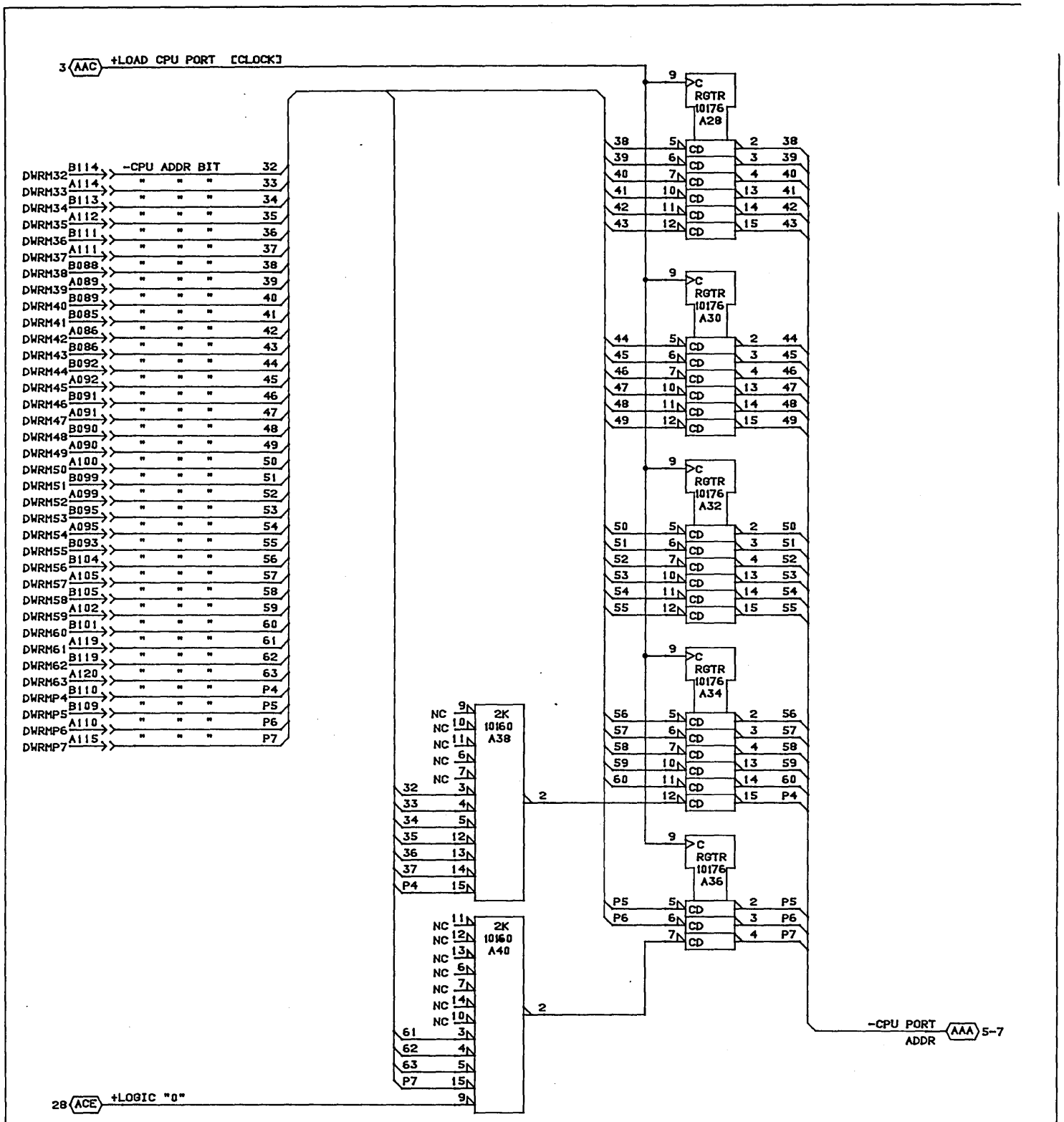

CONTROL DATA CANADA LTD	CPU PORT REGISTER MODULE ASSEMBLY - 210 PAK TYPE: 1DA0	C		A
		20-APR-85	SHEET 02	

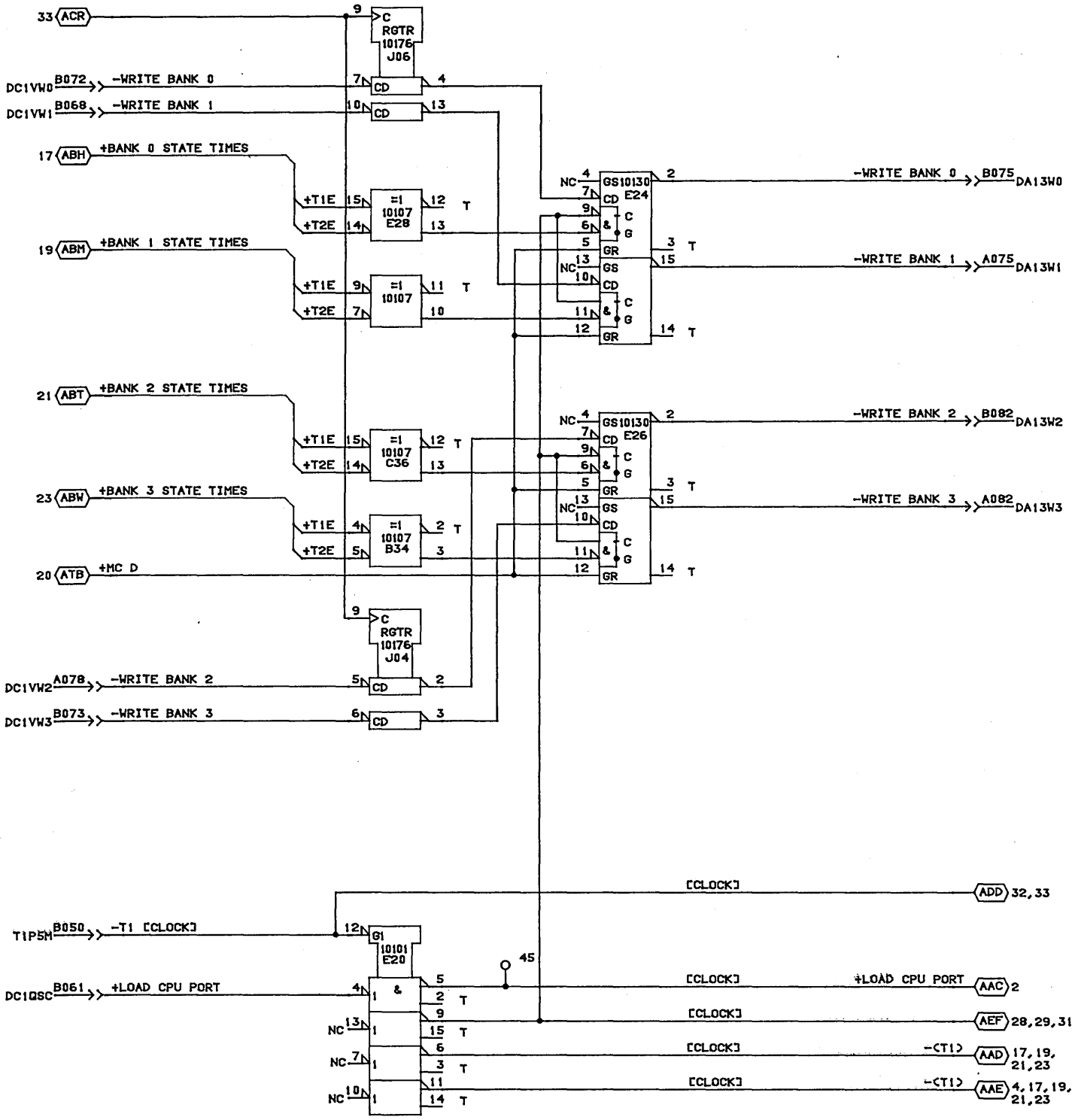

CONTROL DATA CANADA LTD	WRITE F/F MODULE ASSEMBLY - 210 PAK TYPE: 1DAC	C	1	A
		20-APR-85	SHEET 03	

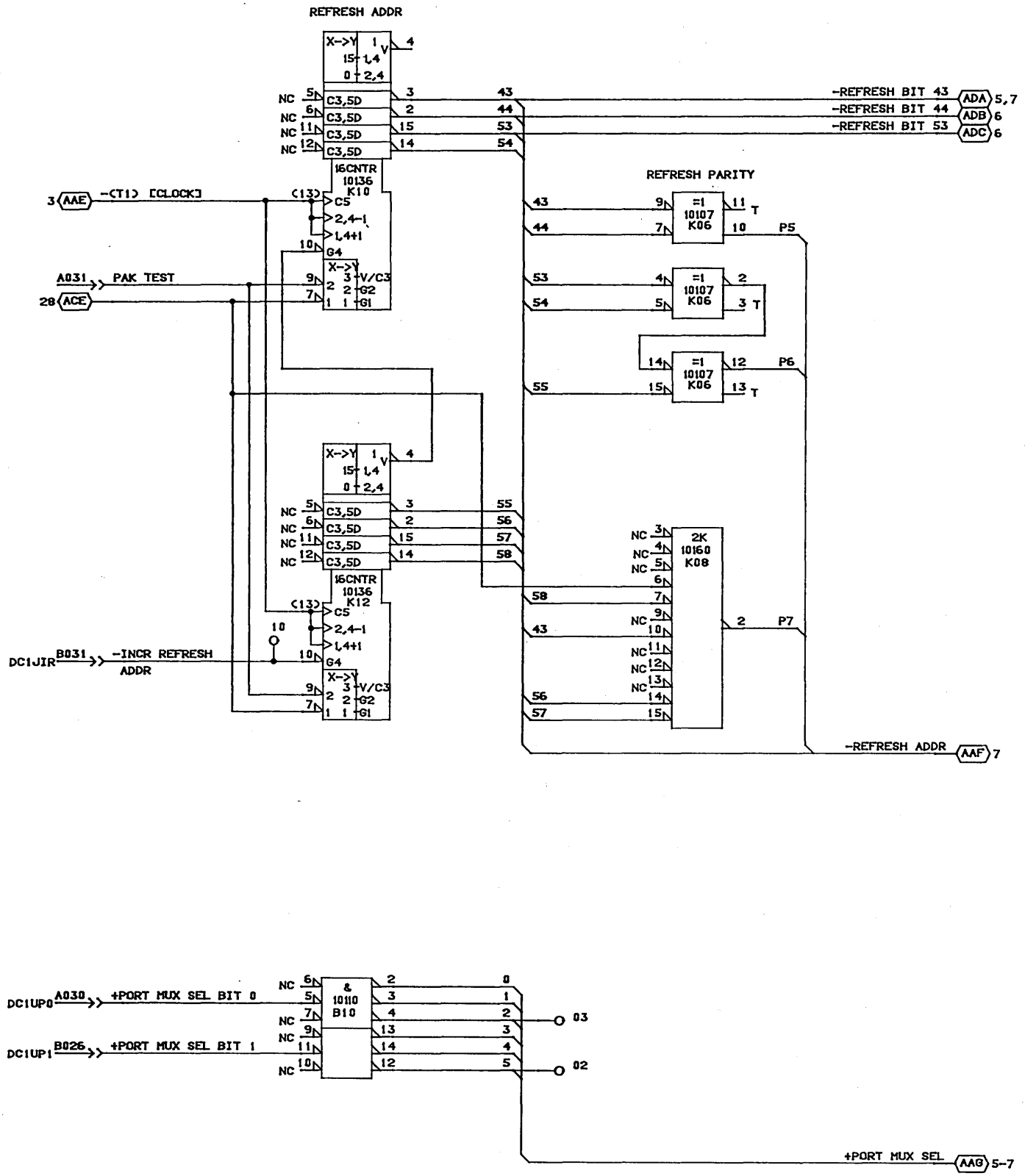

CONTROL DATA CANADA LTD	REFRESH ADDR. AND PORT MUX SEL 210 PAK ASSEMBLY TYPE: 1DA0	C		A
		20-APR-85	SHEET 04	

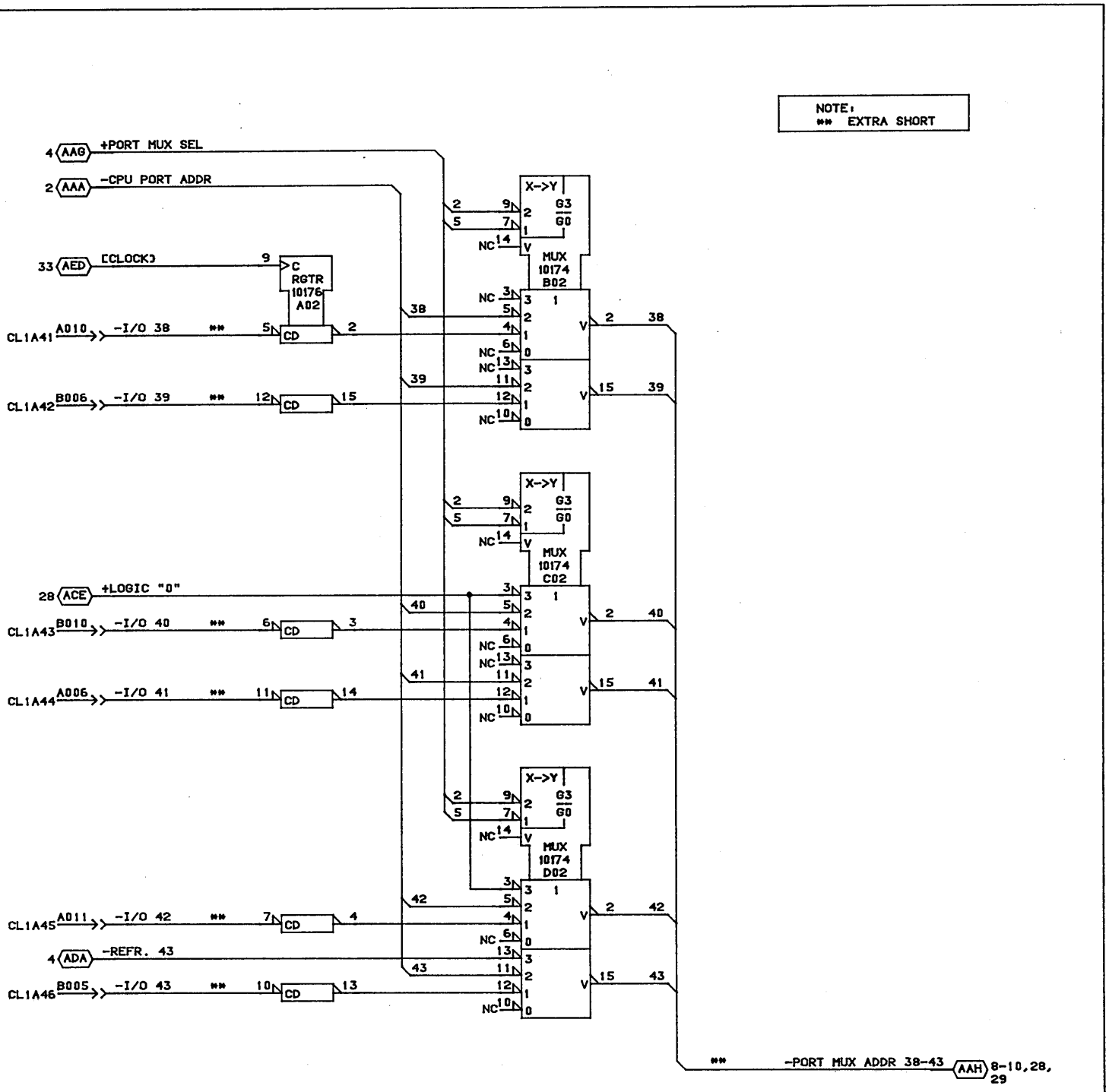

CONTROL DATA CANADA LTD	PORT MUX BITS 38-43 210 PAK ASSEMBLY TYPE: 1DA0	C		A
		20-APR-85	SHEET 05	

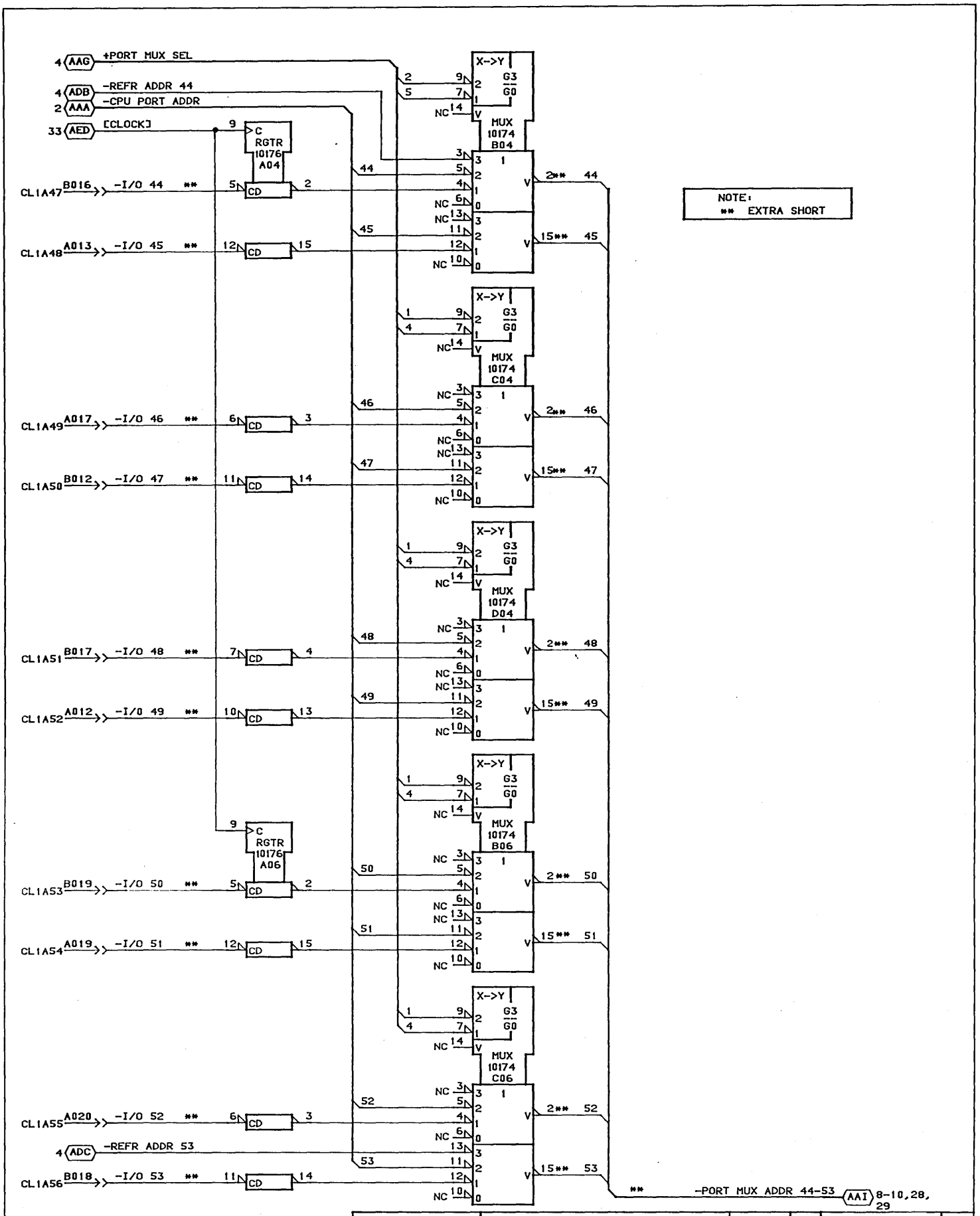

CONTROL DATA CANADA LTD	PORT MUX BITS 44-53 210 PAK ASSEMBLY TYPE: 1DA0	C	----	A
		22-APR-85	SHEET 06	

NOTE:
** EXTRA SHORT

3	REFR ADDRESS
2	CPU ADDRESS
1	PORT MUX BITS
0	LOGIC "1"

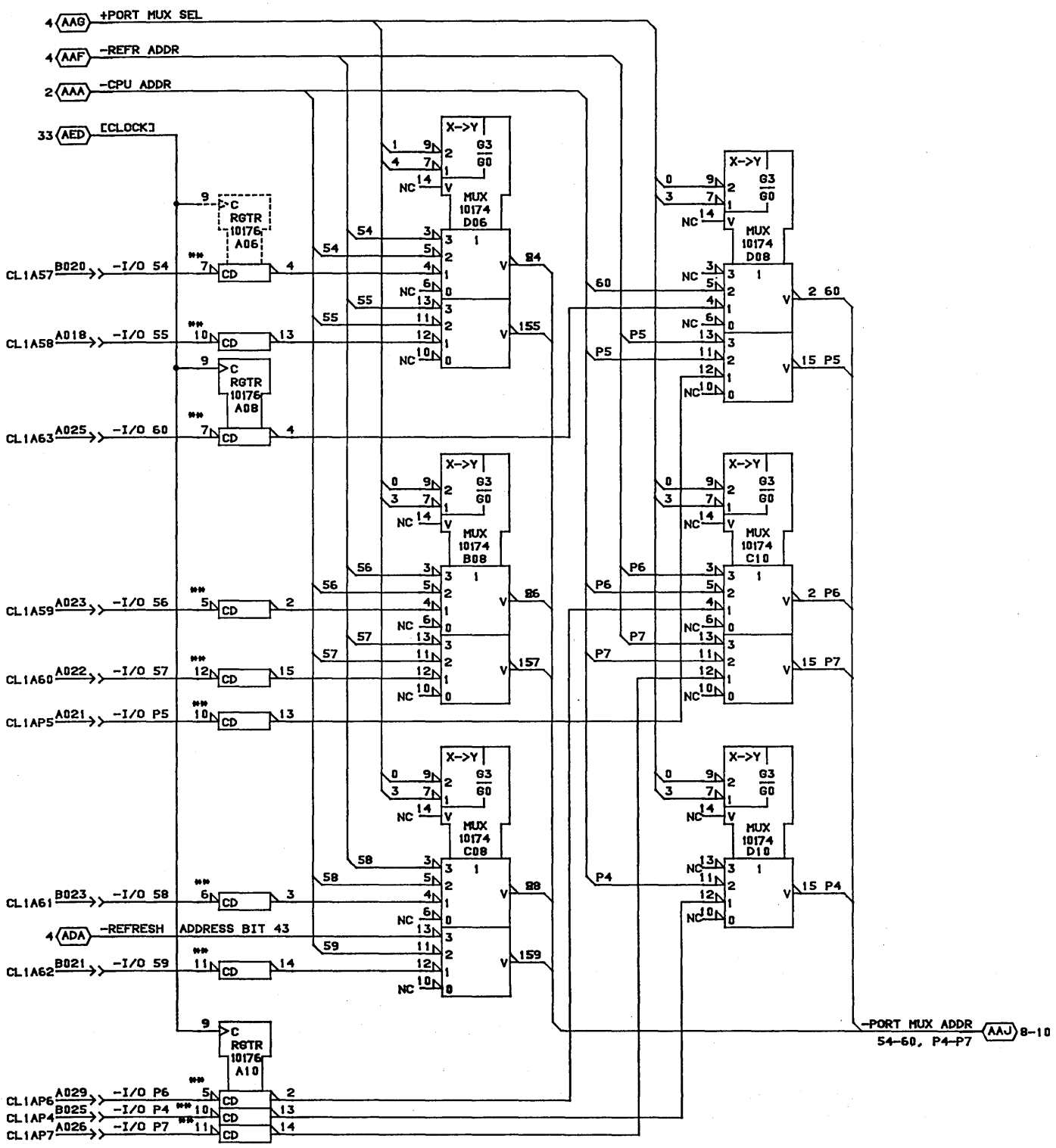

CONTROL DATA CANADA LTD	PORT MUX BITS 54-60,P4-P7 MODULE ASSEMBLY :210 PAK TYPE:1DA0	C		A
		20-APR-85	SHEET 07	

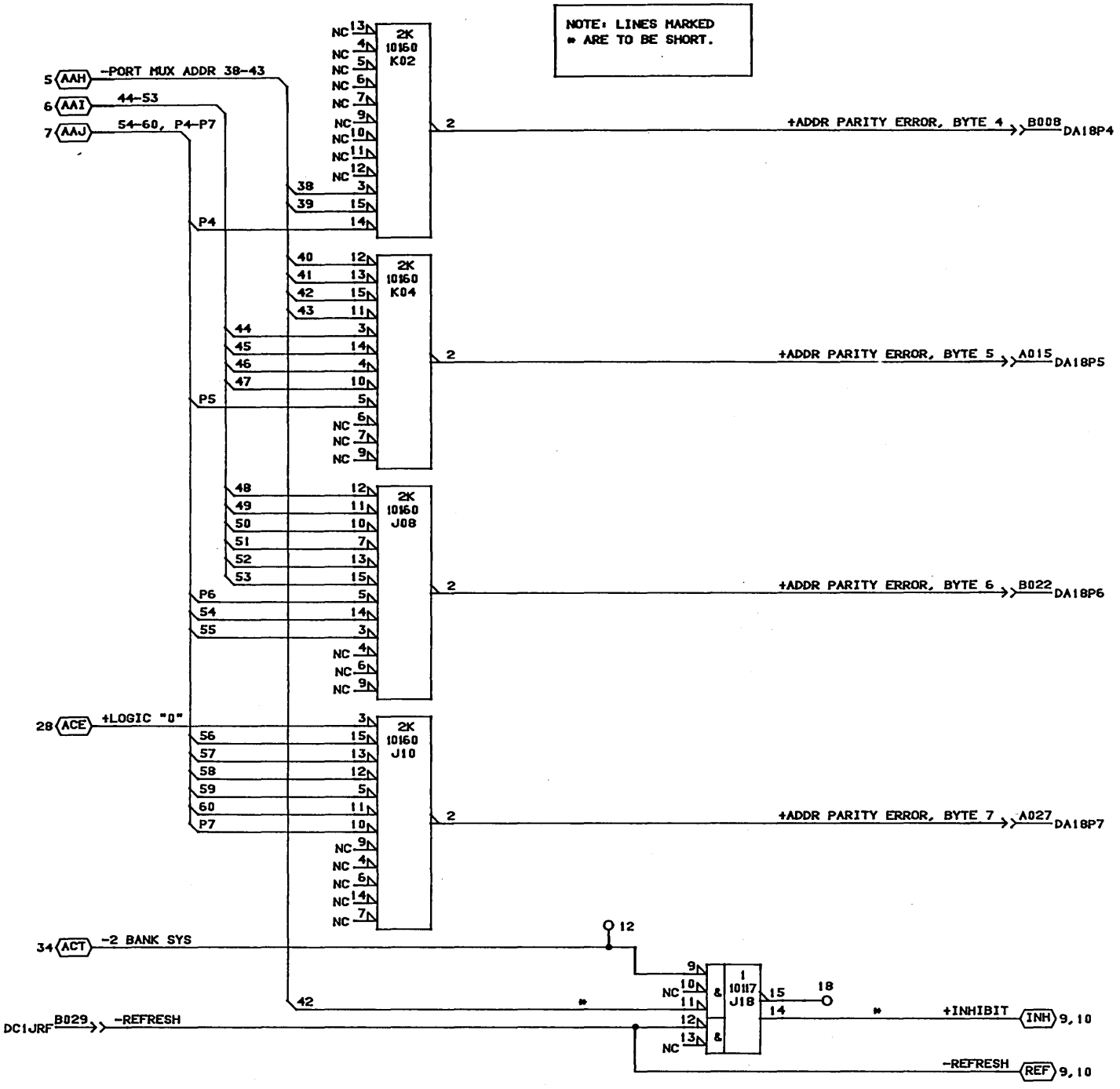

CONTROL DATA CANADA LTD	ADDRESS PARITY CHECK & BANK START MODULE ASSEMBLY - 210 PAK TYPE: 1DA0	C		B
		01-AUG-85	SHEET 08	

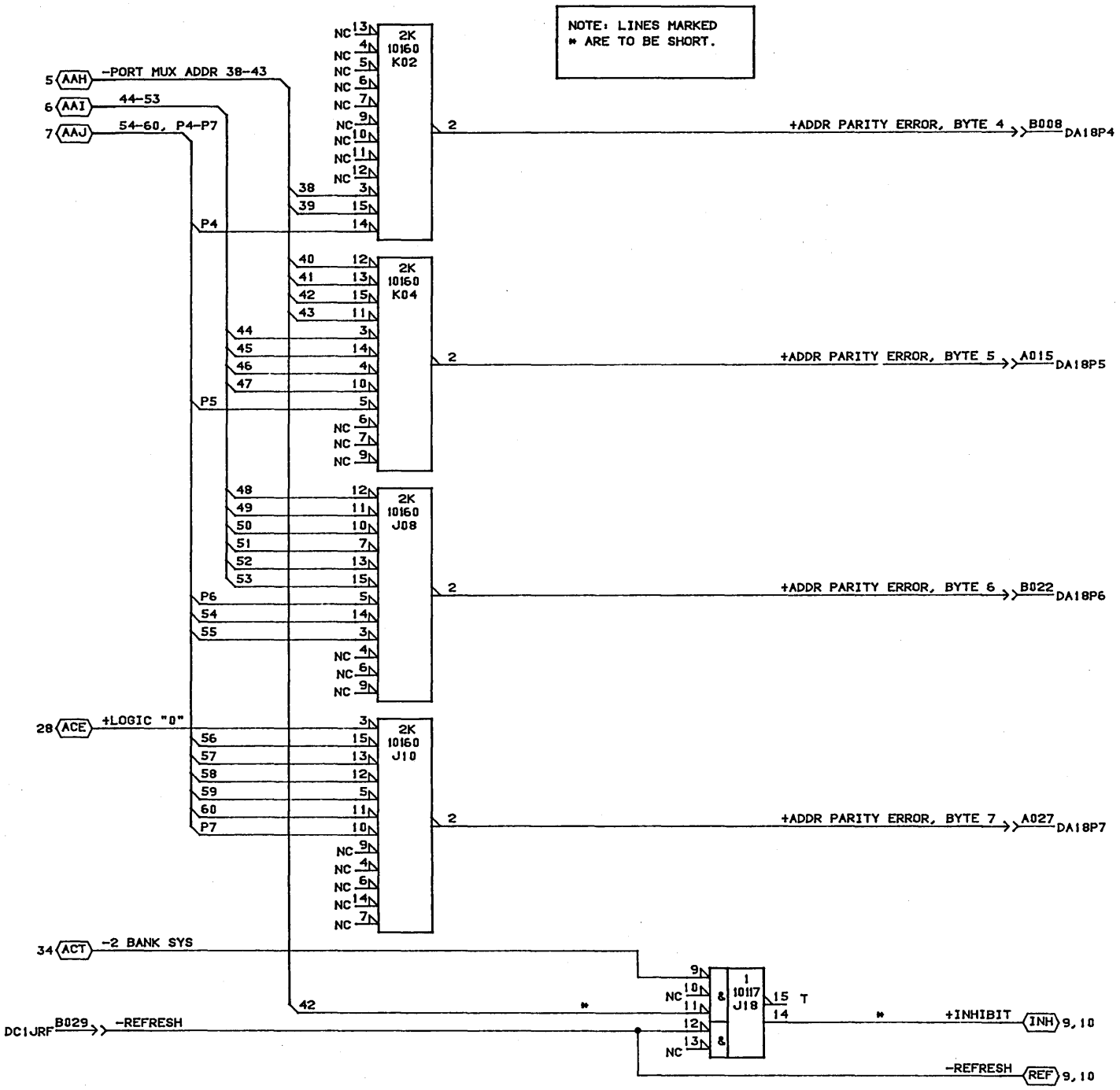

NOTE: THIS DRAWING IS APPLICABLE ONLY TO PWB 19268189 AND 19288838

CONTROL DATA CANADA LTD	ADDRESS PARITY CHECK & BANK START MODULE ASSEMBLY - 210 PAK TYPE: 1DA0		C		B
		02-AUG-85	SHEET 08A		

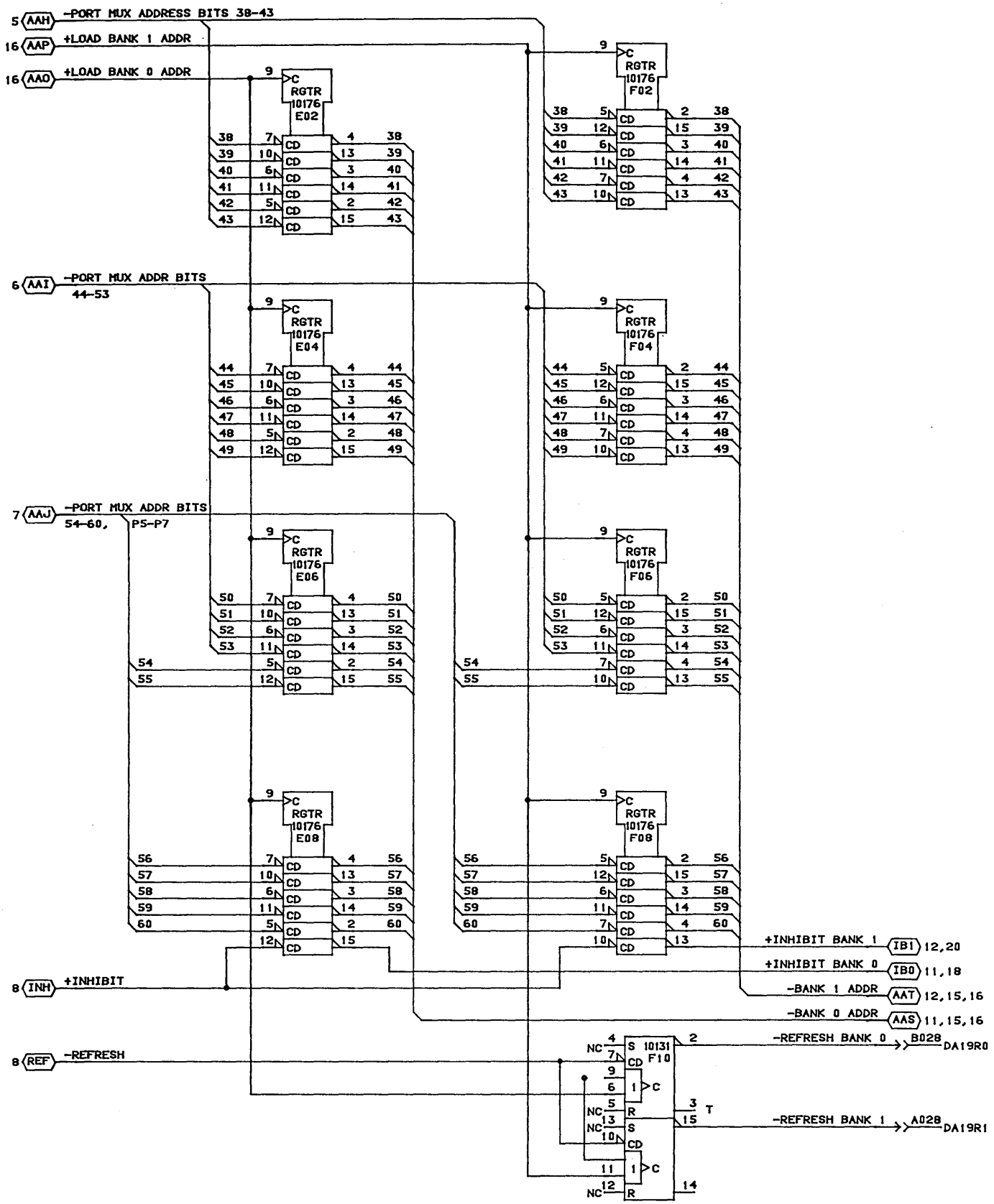

CONTROL DATA CANADA LTD	BANK 0 + 1 ADDR REGISTER 210 PAK ASSEMBLY TYPE: 1DA0	C		A
		20-APR-85	SHEET 09	

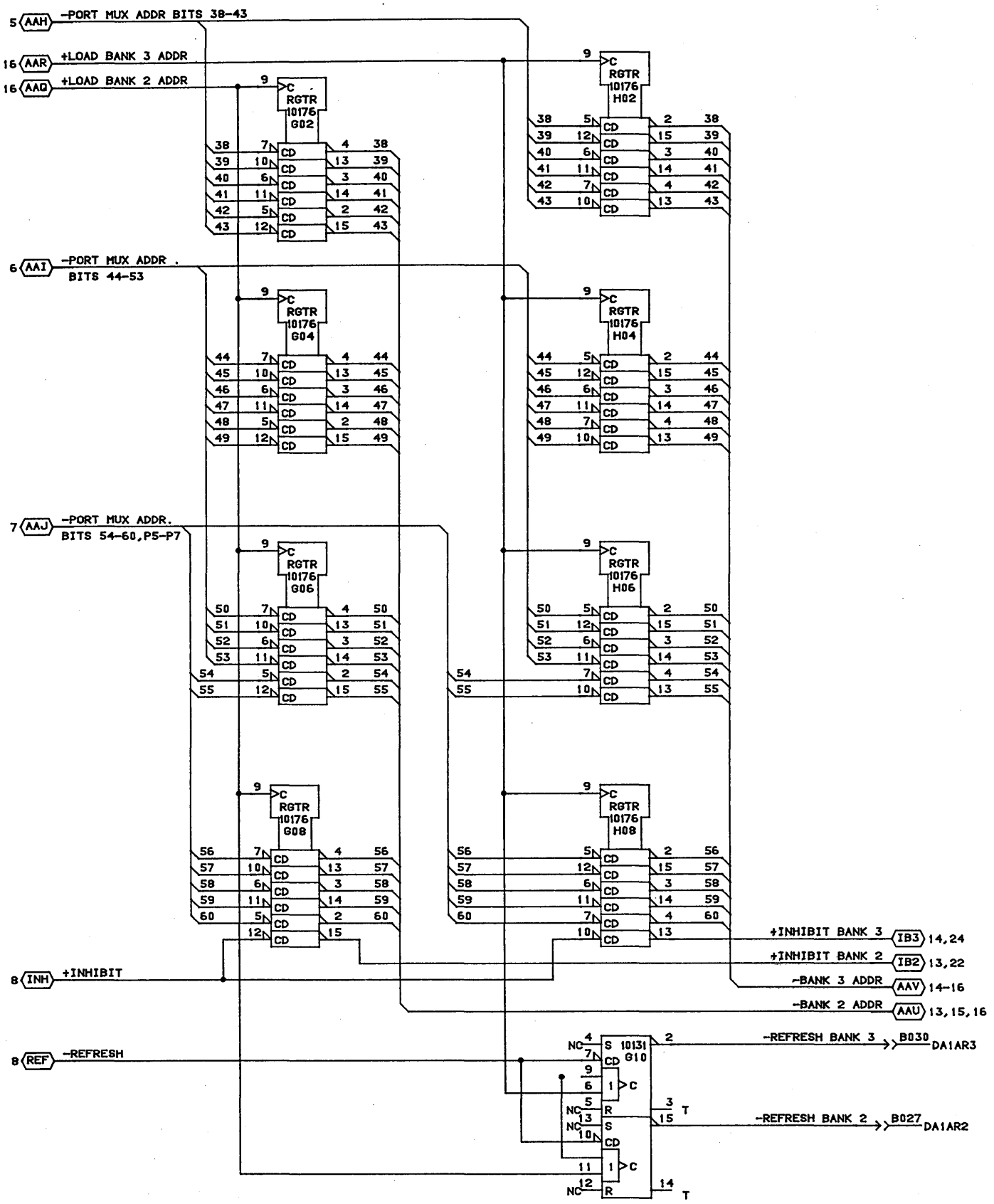

CONTROL DATA CANADA LTD	BANK 2 & 3 ADDR REGISTER 210 PAK ASSEMBLY TYPE: 1DA0		C	A
		20-APR-85	SHEET 10	

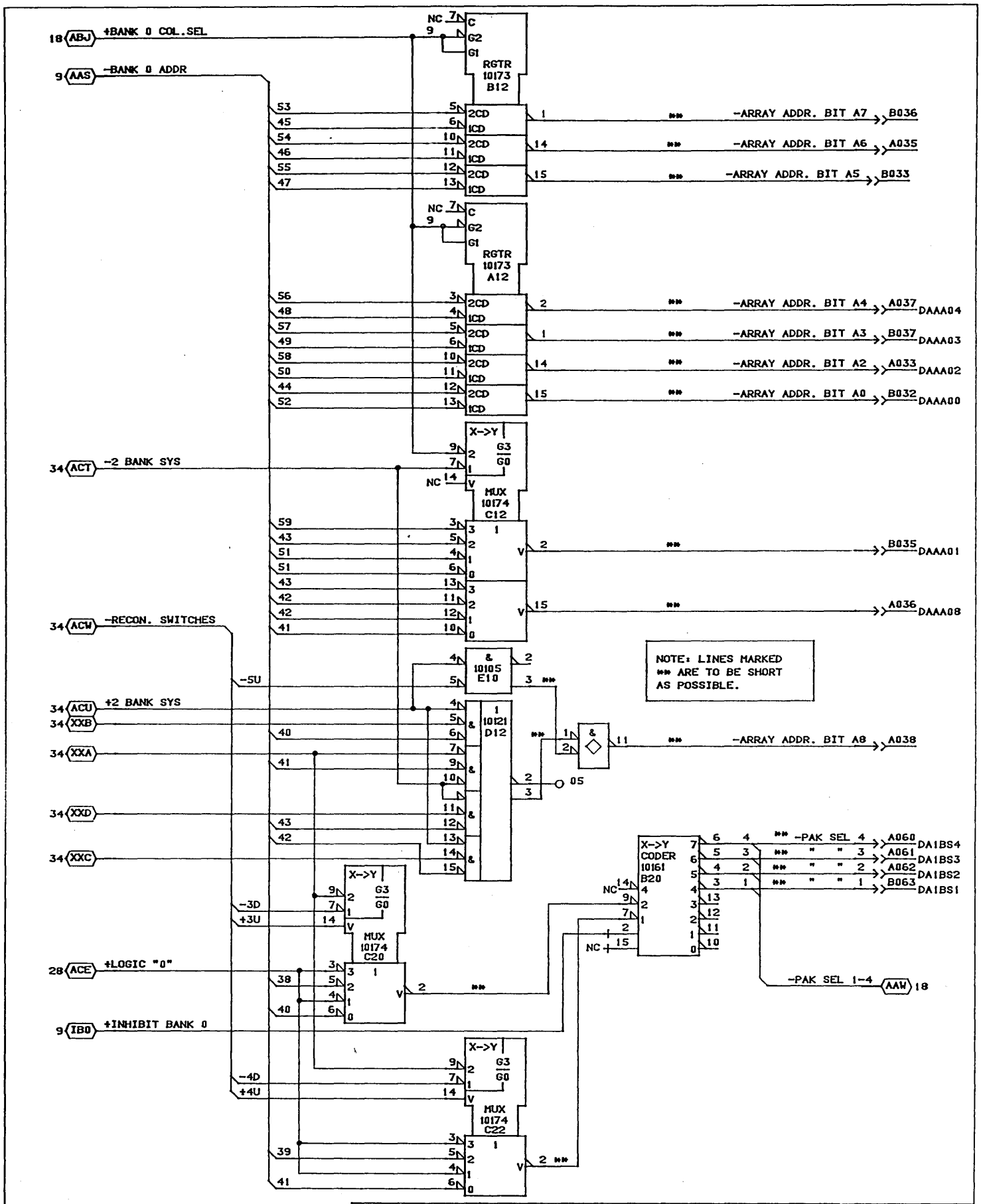

CONTROL DATA CANADA LTD	BANK 0 ARRAY ADDRESS 210 PAK ASSEMBLY TYPE: 1DA0	C 20-APR-85	A SHEET 11

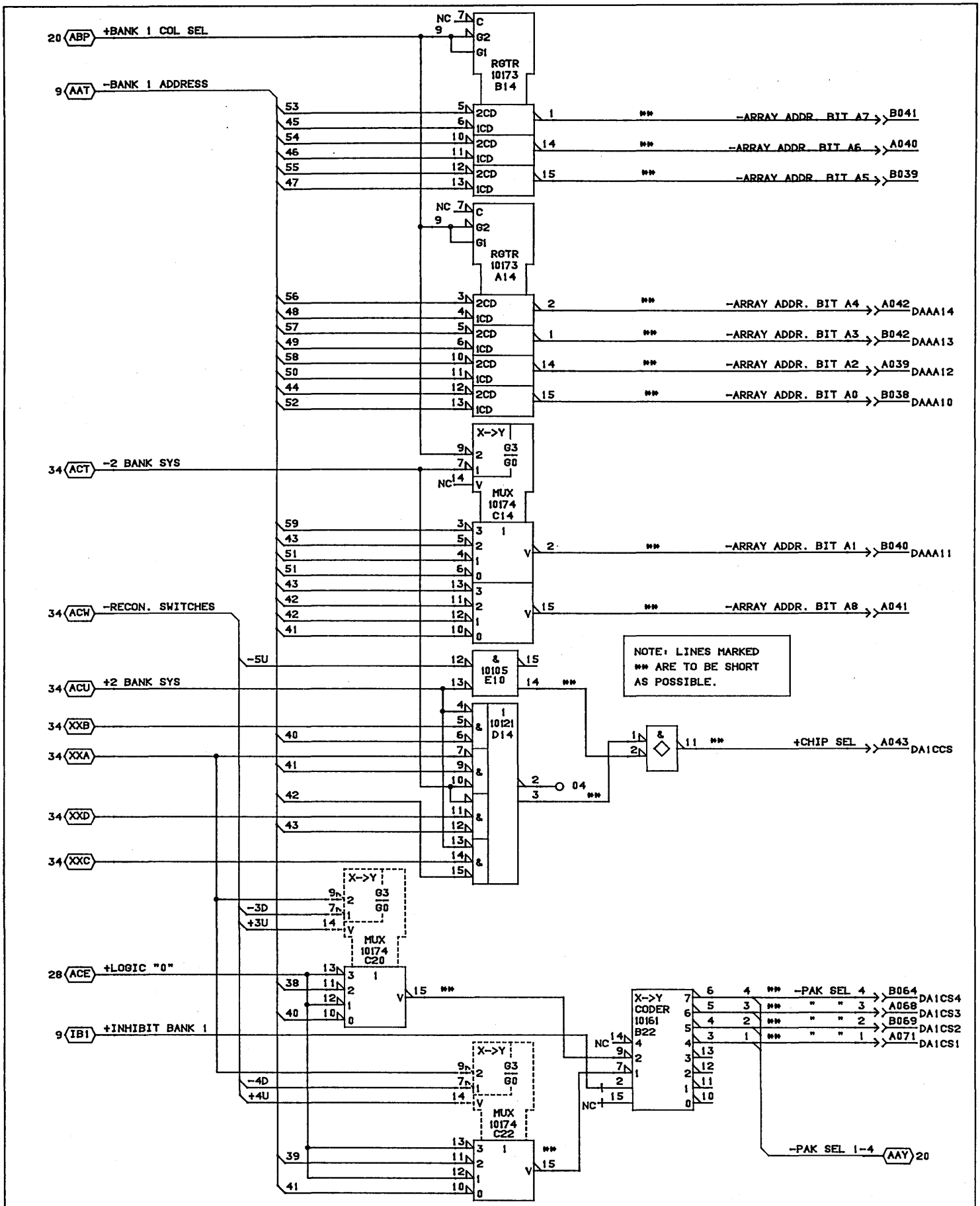
20 ABP +BANK 1 COL SEL
9 AAT -BANK 1 ADDRESS
RGTR 10173 B14
RGTR 10173 A14
-ARRAY ADDR. BIT A7 B041
-ARRAY ADDR. BIT A6 A040
-ARRAY ADDR. BIT A5 B039
-ARRAY ADDR. BIT A4 A042 DAAA14
-ARRAY ADDR. BIT A3 B042 DAAA13
-ARRAY ADDR. BIT A2 A039 DAAA12
-ARRAY ADDR. BIT A0 B038 DAAA10
34 ACT -2 BANK SYS
MUX 10174 C14
-ARRAY ADDR. BIT A1 B040 DAAA11
34 ACW -RECON. SWITCHES
-ARRAY ADDR. BIT A8 A041
-5U
34 ACU +2 BANK SYS
10105 E10
10121 D14
NOTE: LINES MARKED *** ARE TO BE SHORT AS POSSIBLE.
+CHIP SEL A043 DA1CCS
34 XXB
34 XXA
34 XXD
34 XXC
-3D
+3U
MUX 10174 C20
28 ACE +LOGIC "0"
9 IB1 +INHIBIT BANK 1
-4D
+4U
MUX 10174 C22
X->Y CODER 10161 B22
-PAK SEL 4 B064 DA1CS4
" " 3 A068 DA1CS3
" " 2 B069 DA1CS2
" " 1 A071 DA1CS1
-PAK SEL 1-4 AAY 20
CONTROL DATA CANADA LTD
BANK 1 ARRAY ADDRESS
210 PAK ASSEMBLY
TYPE: 1DA0
C
A
22-APR-85
SHEET 12

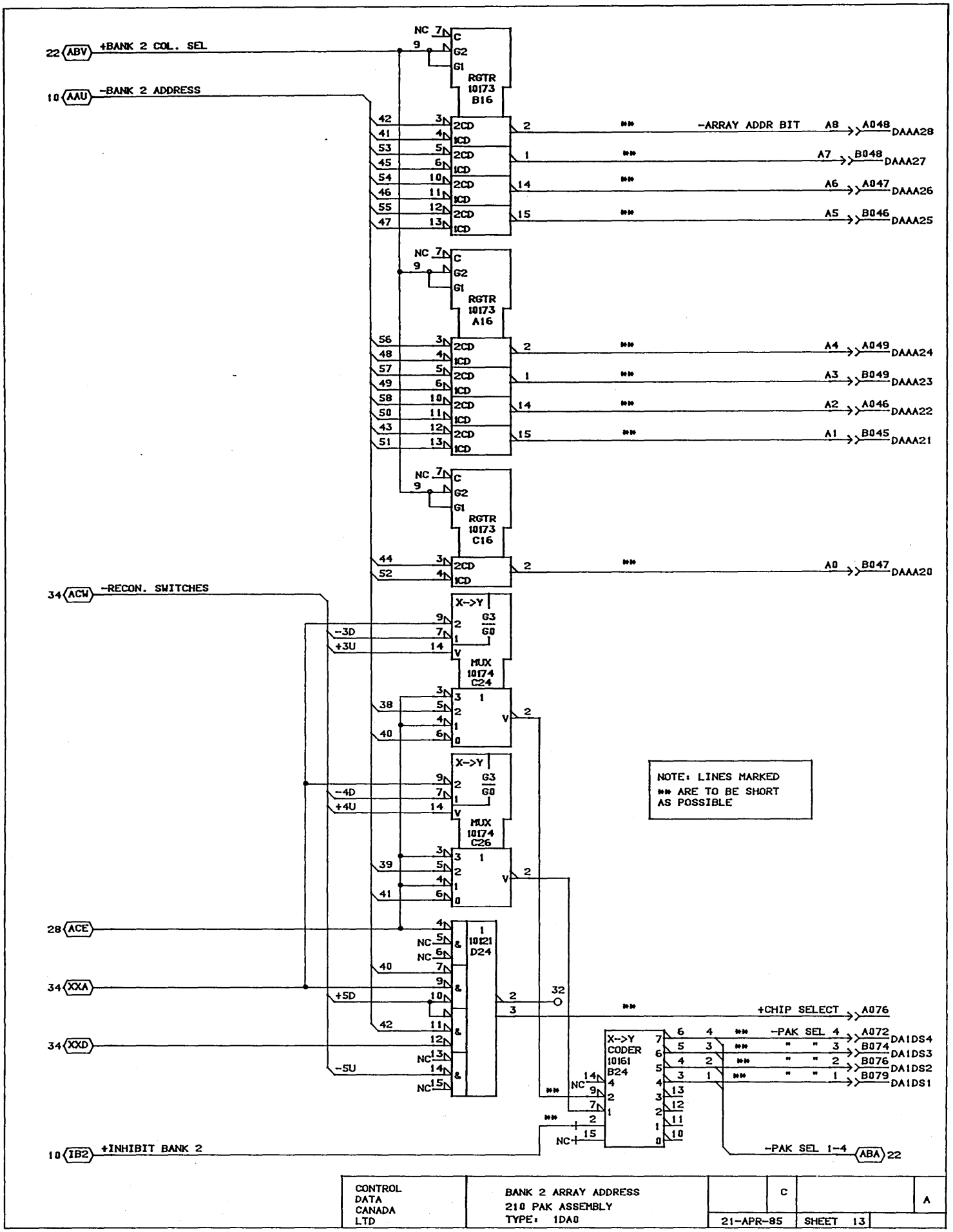
22 ABV +BANK 2 COL. SEL
10 AAU -BANK 2 ADDRESS
34 ACW -RECON. SWITCHES
28 ACE
34 XXA
34 XXD
10 IB2 +INHIBIT BANK 2
RGTR 10173 B16
RGTR 10173 A16
RGTR 10173 C16
MUX 10174 C24
MUX 10174 C26
10121 D24
X->Y CODER 10161 B24
-ARRAY ADDR BIT A8 A048 DAAA28
A7 B048 DAAA27
A6 A047 DAAA26
A5 B046 DAAA25
A4 A049 DAAA24
A3 B049 DAAA23
A2 A046 DAAA22
A1 B045 DAAA21
A0 B047 DAAA20
+CHIP SELECT A076
-PAK SEL 4 A072 DA1DS4
B074 DA1DS3
B076 DA1DS2
B079 DA1DS1
-PAK SEL 1-4 ABA 22
NOTE: LINES MARKED
** ARE TO BE SHORT
AS POSSIBLE
CONTROL DATA CANADA LTD
BANK 2 ARRAY ADDRESS
210 PAK ASSEMBLY
TYPE: 1DA0
C
A
21-APR-85
SHEET 13

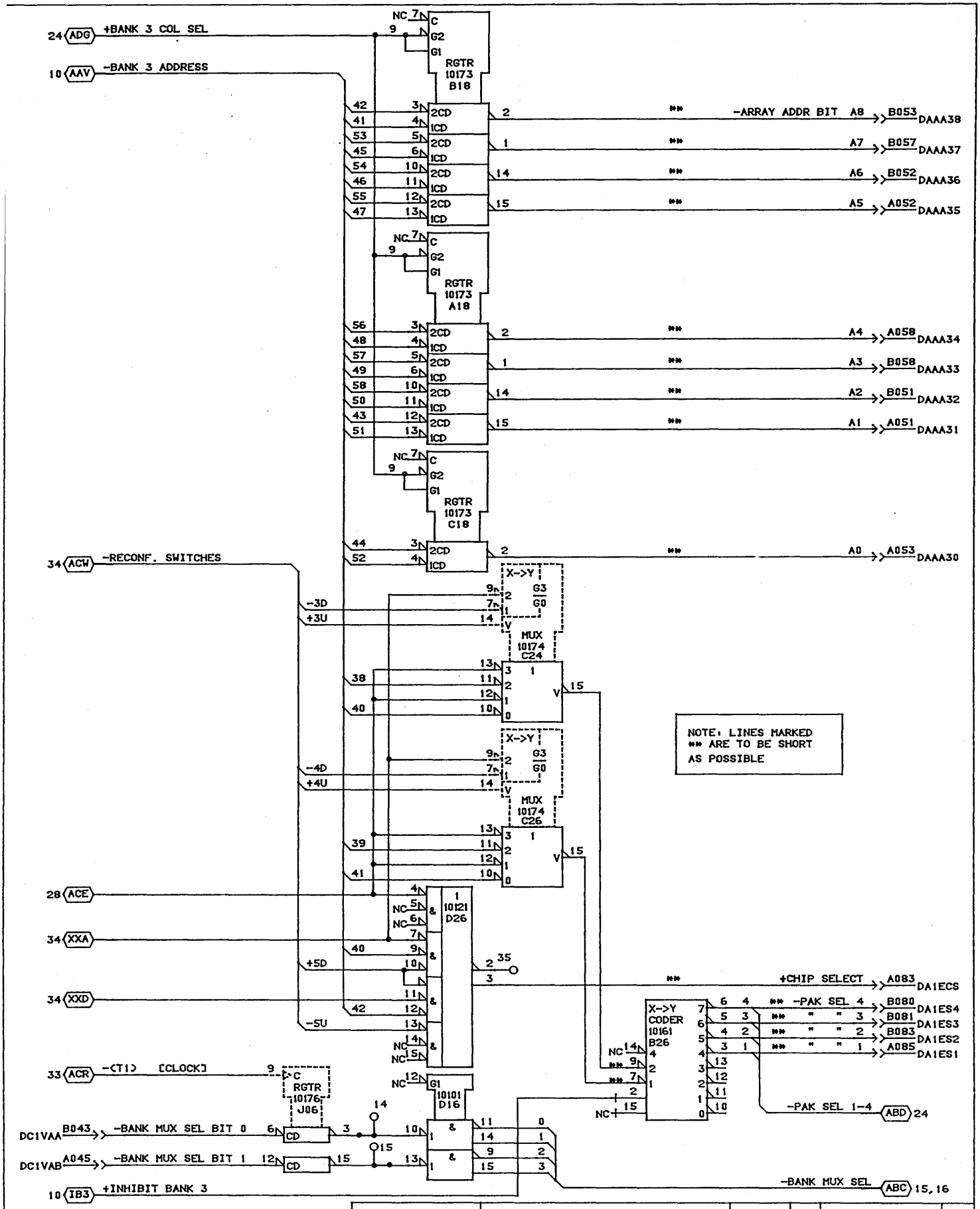

CONTROL DATA CANADA LTD	BANK 3 ARRAY ADDRESS MODULE ASSEMBLY - 210 PAK TYPE: 1DA0	C		A
		21-APR-85	SHEET 14	

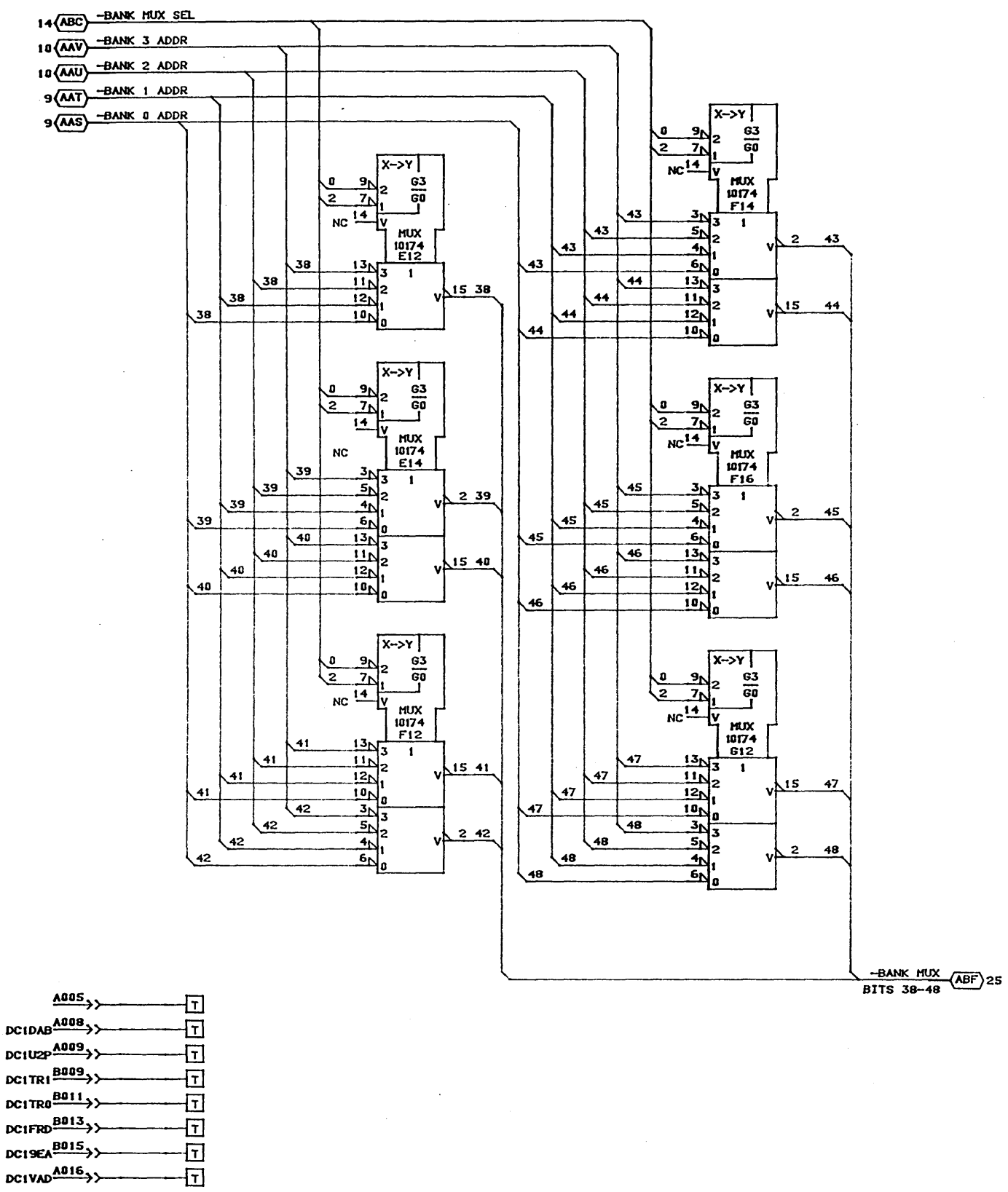

CONTROL DATA CANADA LTD	BANK MUX BITS 40-51 MODULE ASSEMBLY - 210 PAK TYPE: 1DA0	C		A
		21-APR-85	SHEET 15	

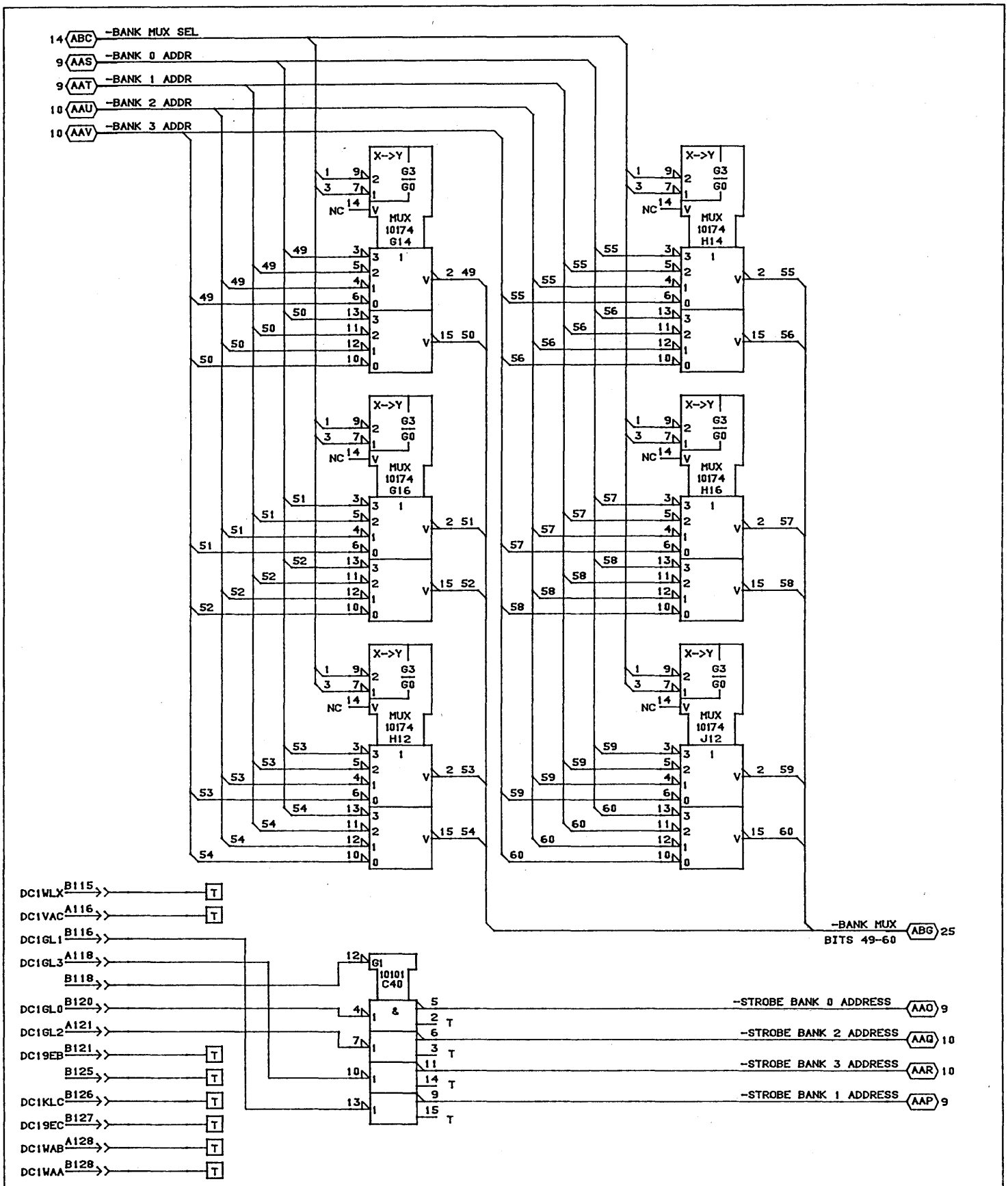

CONTROL DATA CANADA LTD	BANK MUX BITS 52-60, P5-P7 MODULE ASSEMBLY - 210 PAK TYPE: 1DA0	C		A
		22-APR-85	SHEET 16	

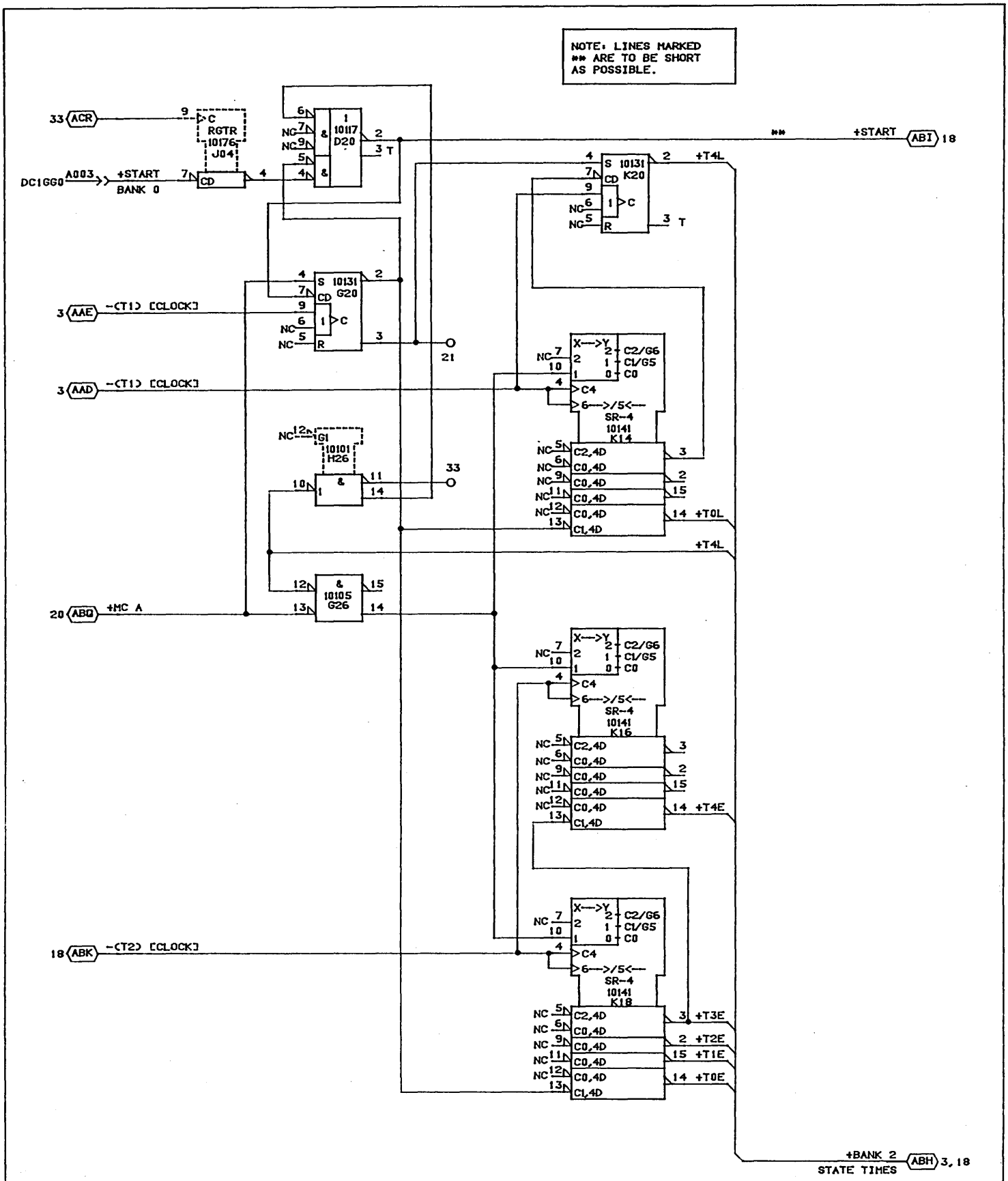

CONTROL DATA CANADA LTD	BANK 0 STATE COUNTERS 210 PAK ASSEMBLY TYPE: 1DA0	C		A
		22-APR-85	SHEET 17	

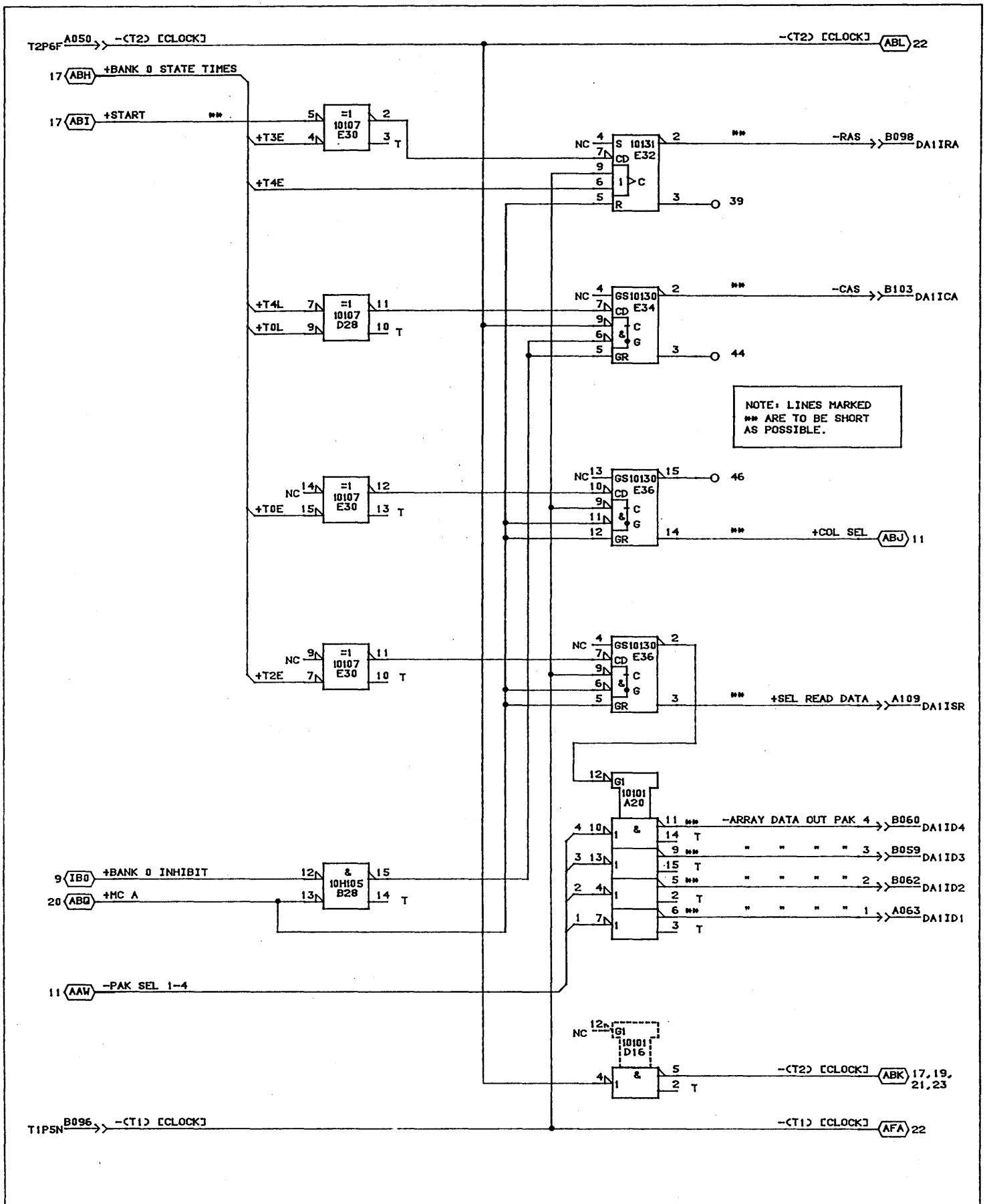

CONTROL DATA CANADA LTD	BANK 0 ARRAY CONTROL 210 PAK ASSEMBLY TYPE:: 1DA0	C		A
		22-APR-85	SHEET 18	

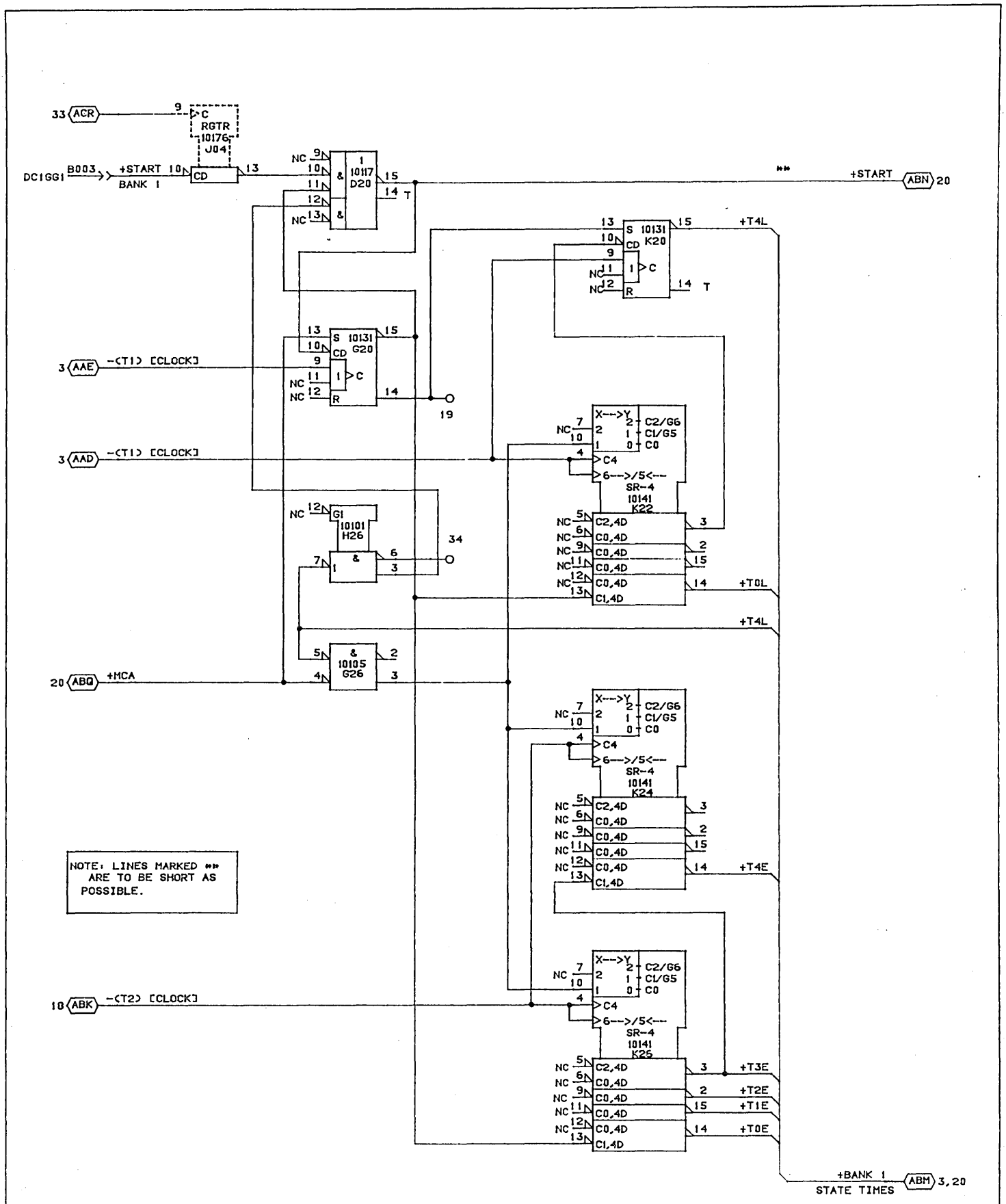

CONTROL DATA CANADA LTD	BANK 1 STATE COUNTERS 210 PAK ASSEMBLY TYPE: 1DA0	C		A
		22-APR-85	SHEET 19	

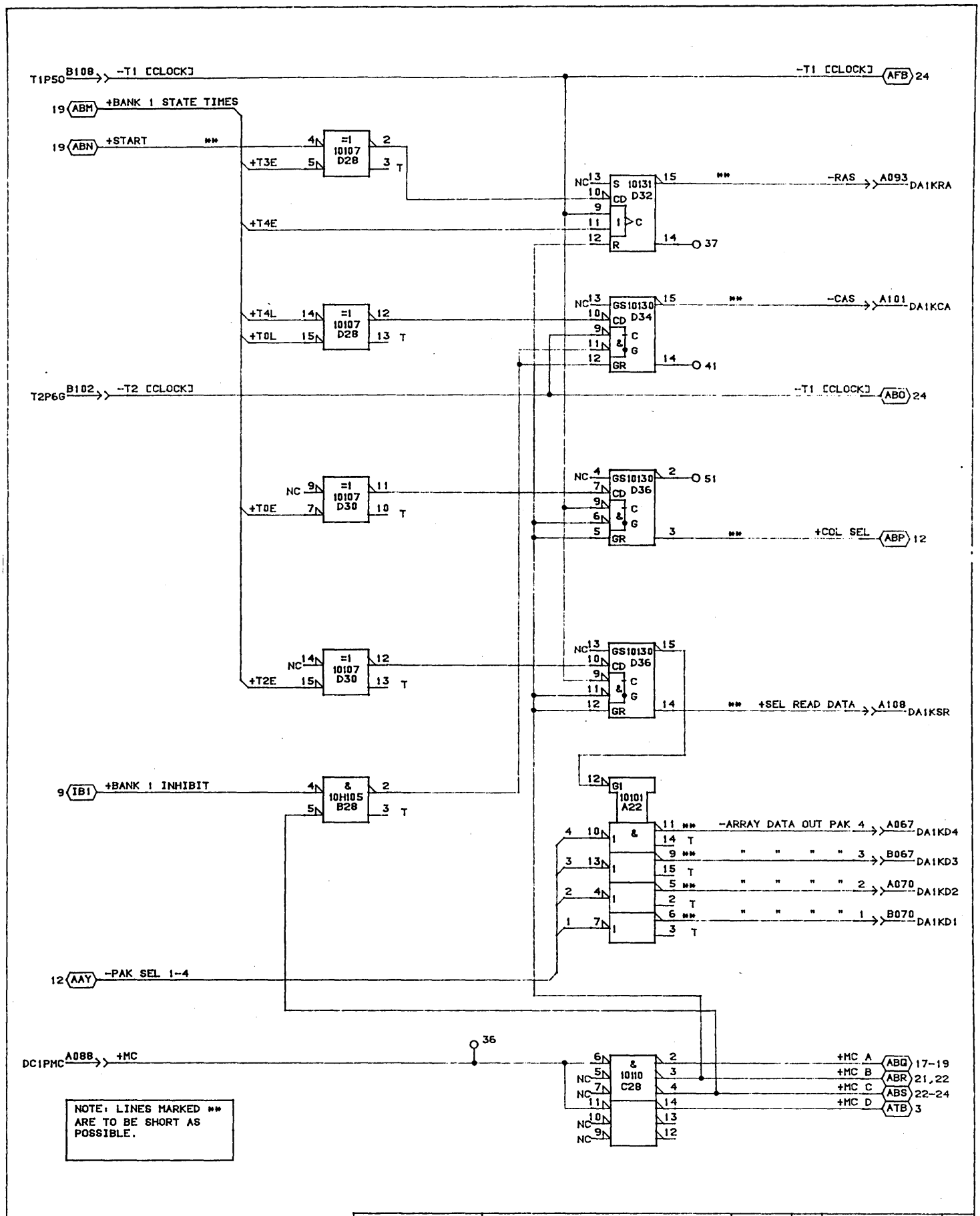

CONTROL DATA CANADA LTD	BANK 1 ARRAY CONTROL 210 PAK ASSEMBLY TYPE: 1DA0	C		A
		22-APR-85	SHEET 20	

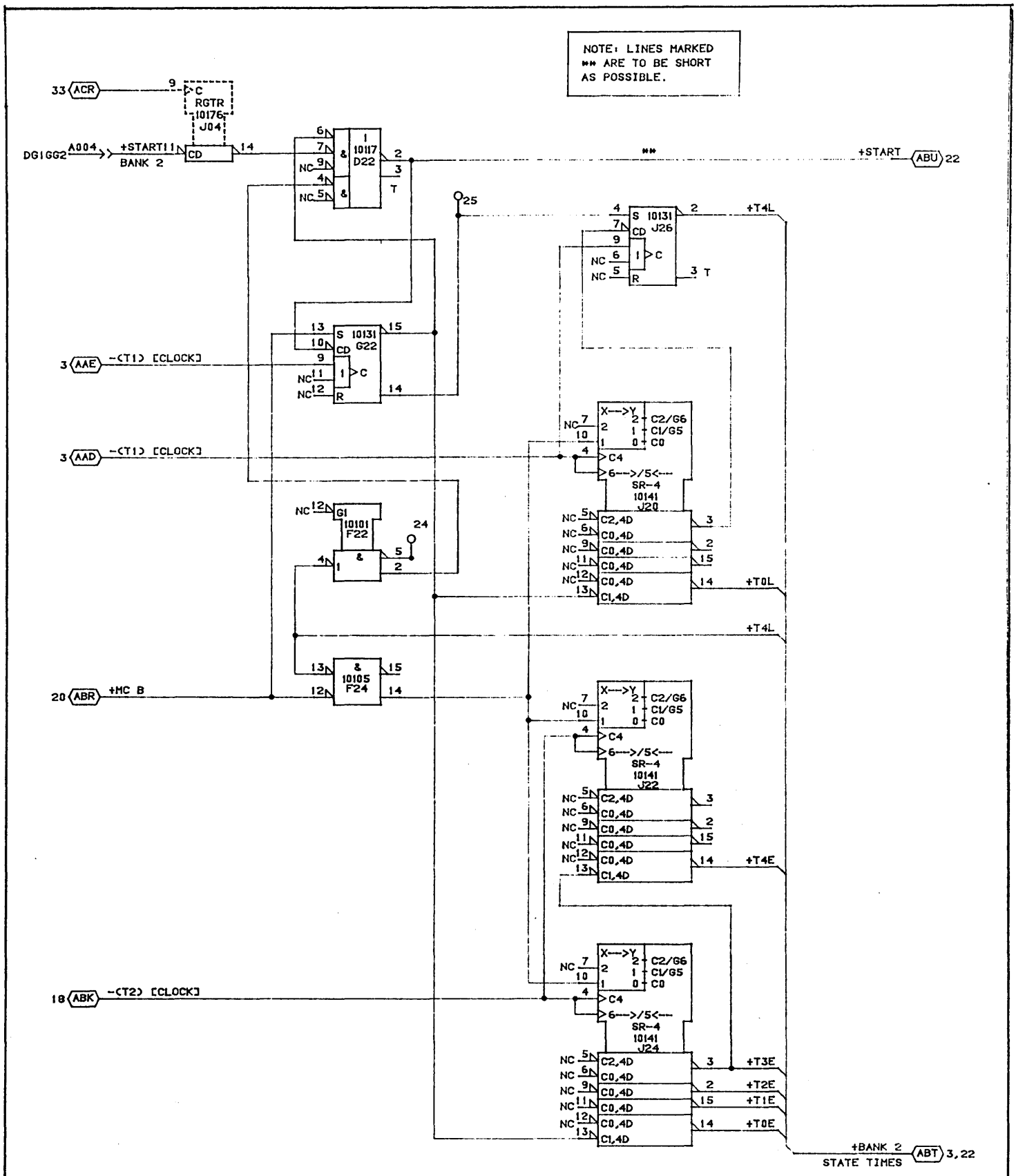

CONTROL DATA CANADA LTD	BANK 2 STATE COUNTERS 210 PAK ASSEMBLY TYPE: 1DA0	C		A
		22-APR-85	SHEET 21	

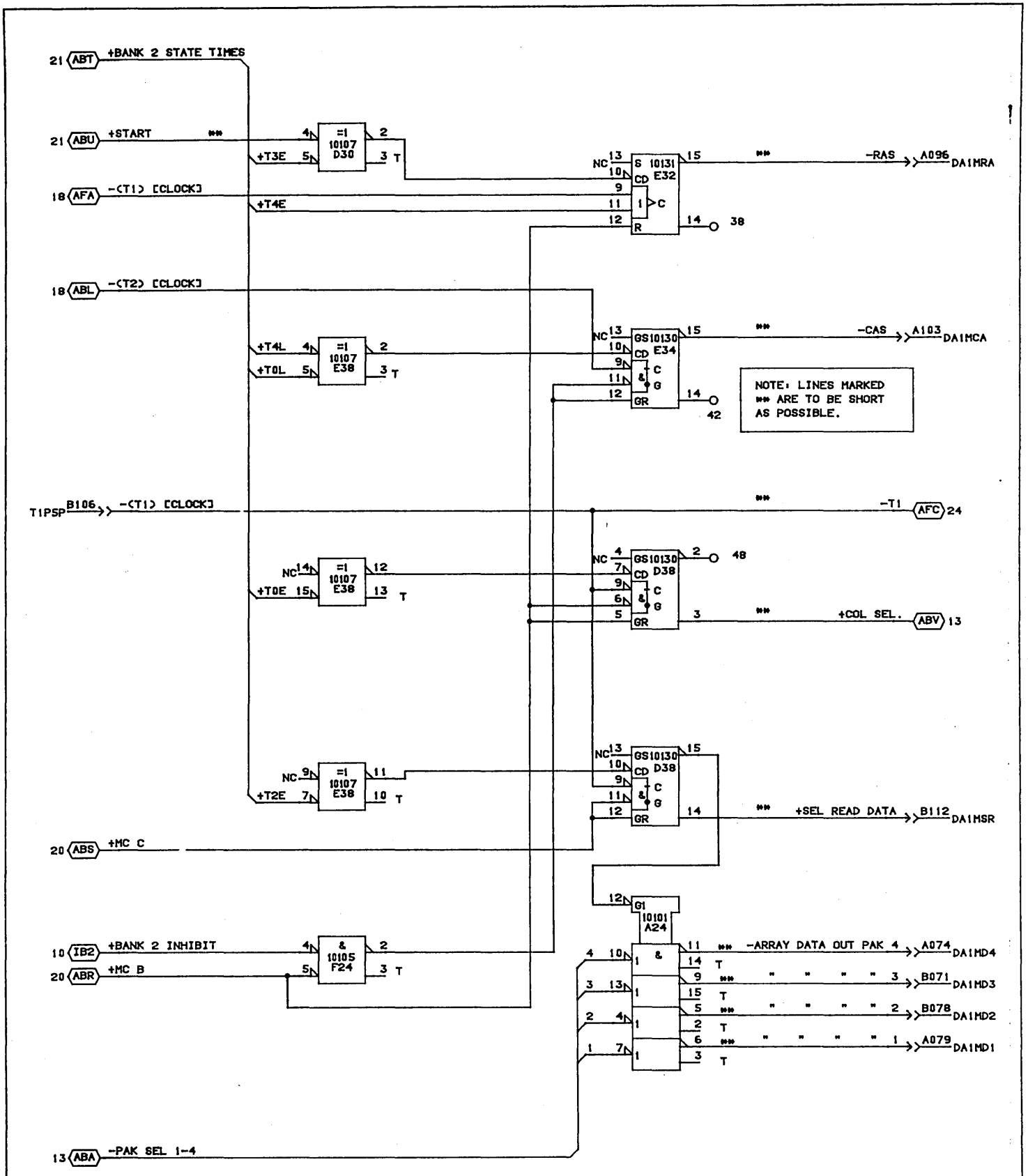

CONTROL DATA CANADA LTD	BANK 2 ARRAY CONTROL 210 PAK ASSEMBLY TYPE: 1DA0	C		A
		22-APR-85	SHEET 22	

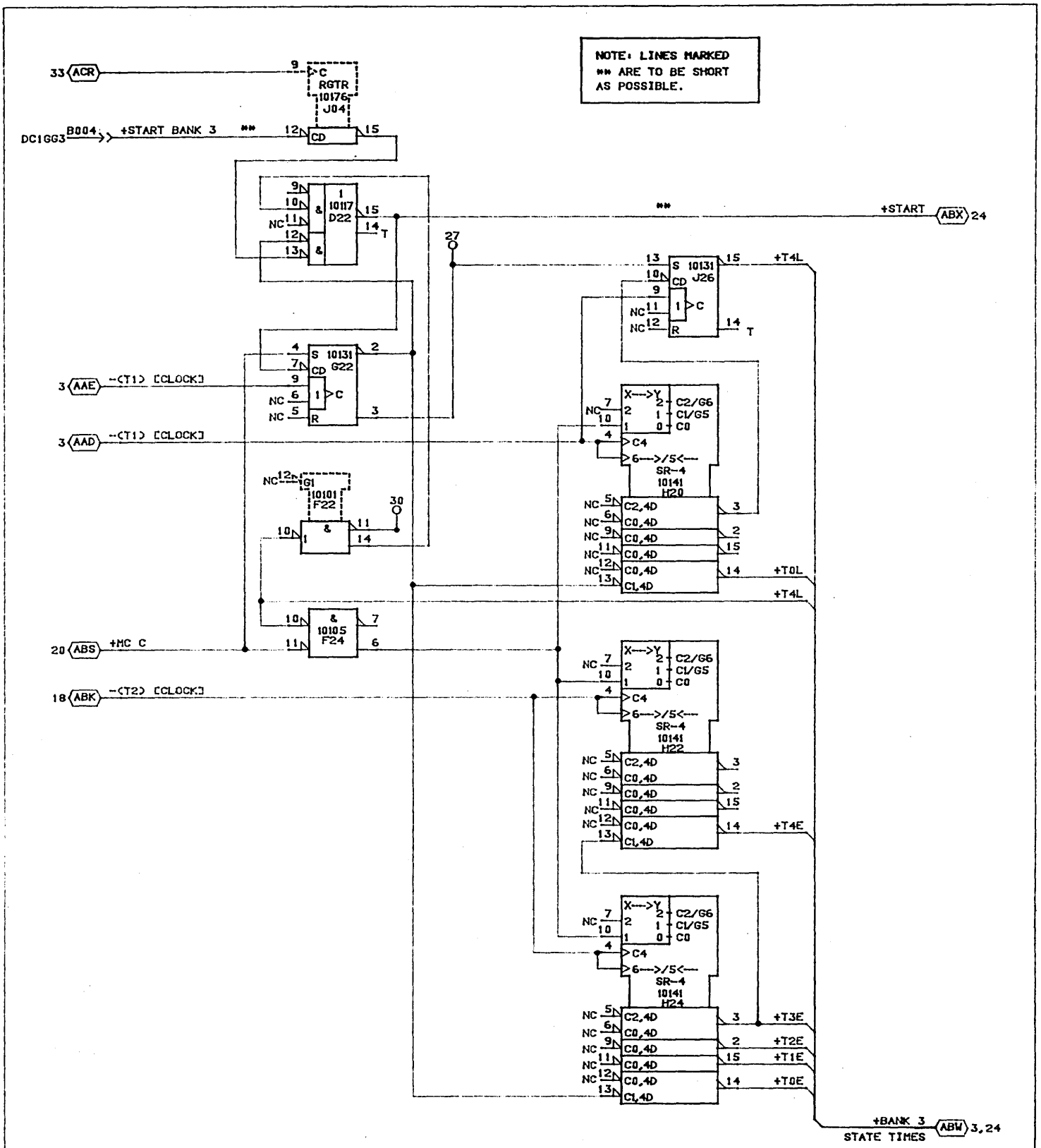

CONTROL DATA CANADA LTD	BANK 3 STATE COUNTERS MODULE ASSEMBLY - 210 PAK TYPE: 1DA0		C	A
		22-APR-85	SHEET 23	

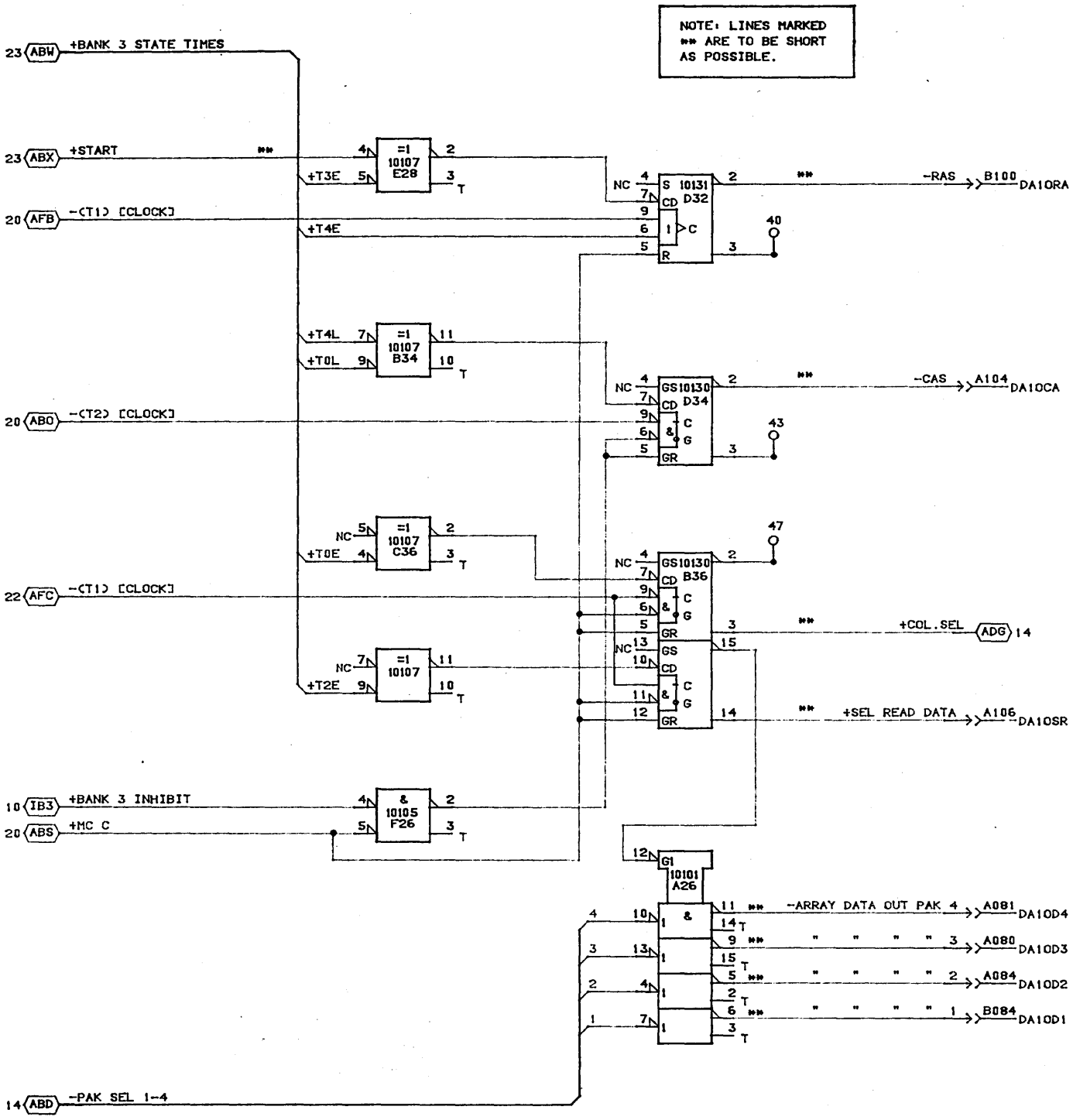

CONTROL DATA CANADA LTD	BANK 3 ARRAY CONTROL MODULE ASSEMBLY - 210 PAK TYPE: 1DA0	C		A
		22-APR-85	SHEET 24	

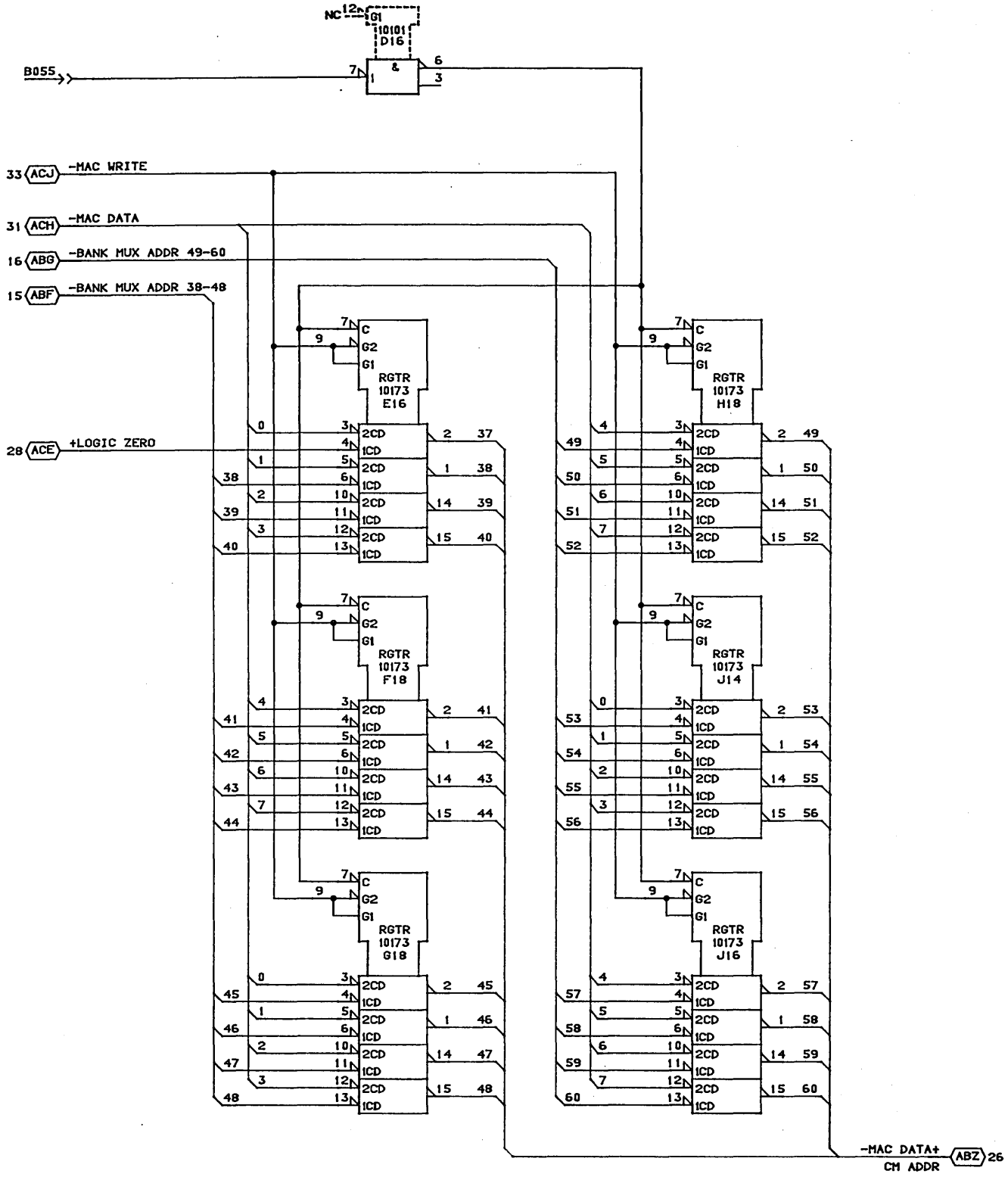

CONTROL DATA CANADA LTD	MAC DATA OR CM ADDR MODULE ASSEMBLY 210 PAK TYPE: 1DA0	C		A
		22-APR-85	SHEET 25	

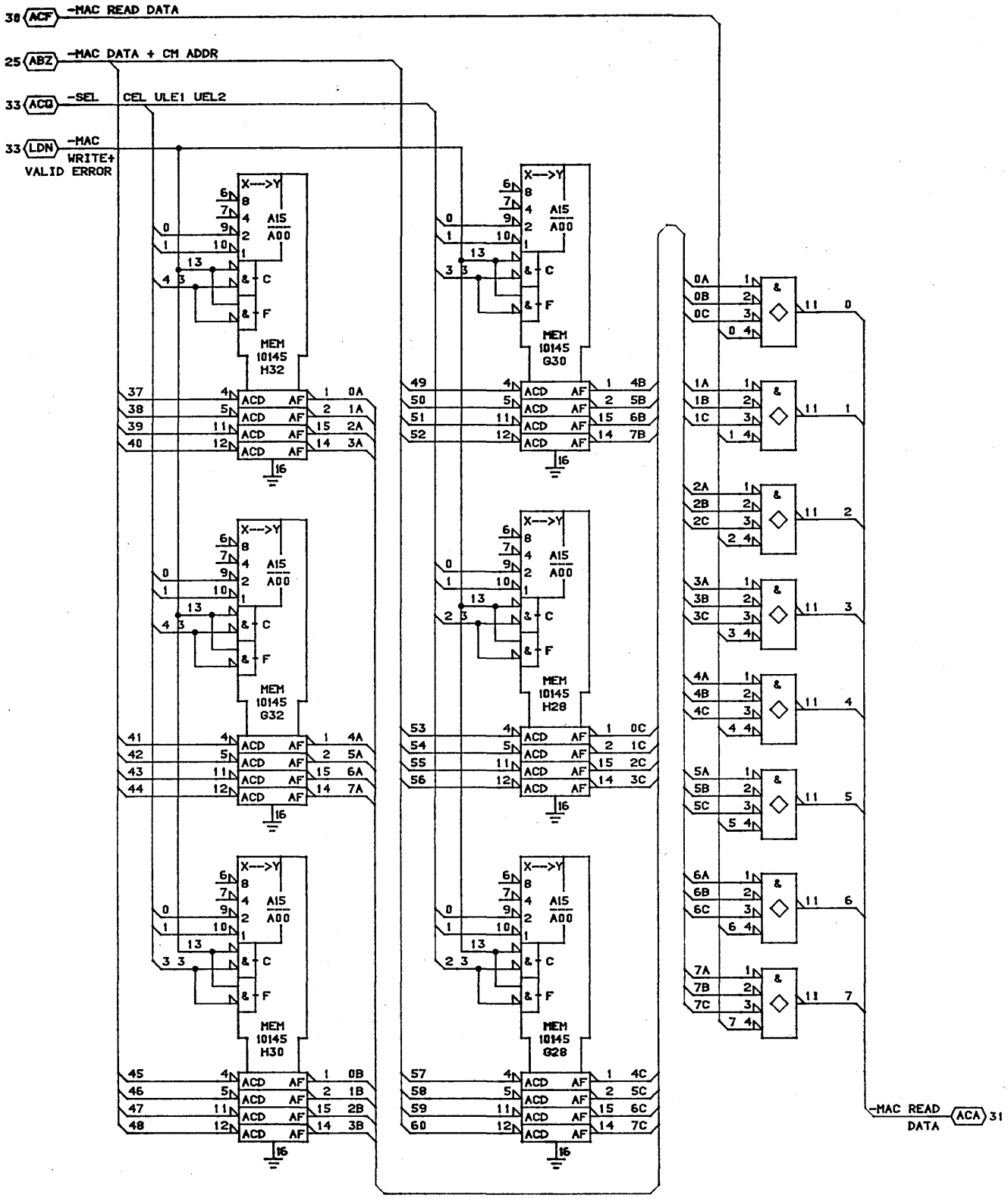

CONTROL DATA CANADA LTD	CEL, UEL1 AND UEL2 REG 210 PAK ASSEMBLY TYPE: 1DA0	C		A
		22-APR-85	SHEET 26	

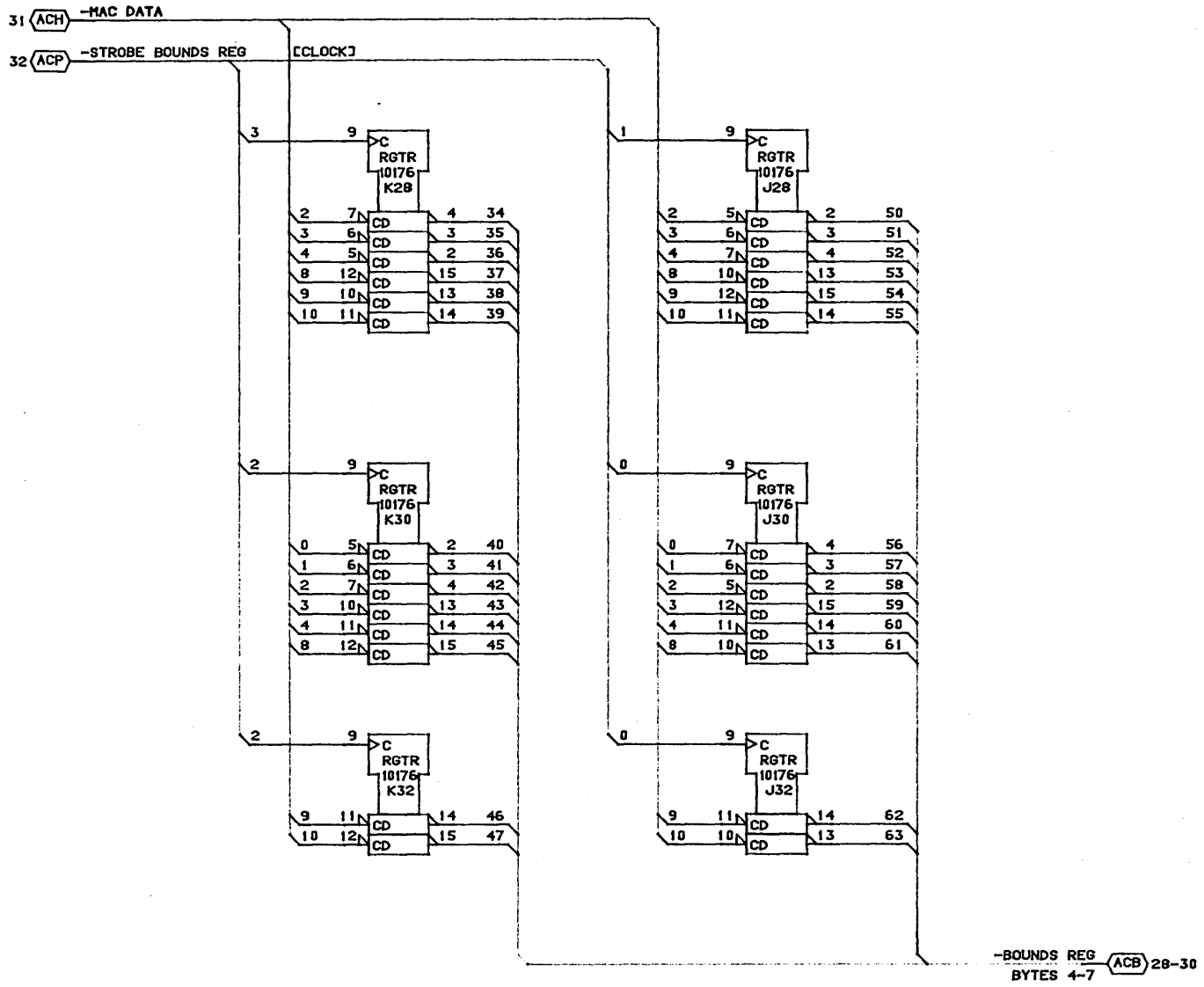

CONTROL DATA CANADA LTD	BOUNDS REGISTER 210 PAK ASSEMBLY TYPE: 1DA0	C		A
		22-APR-85	SHEET 27	

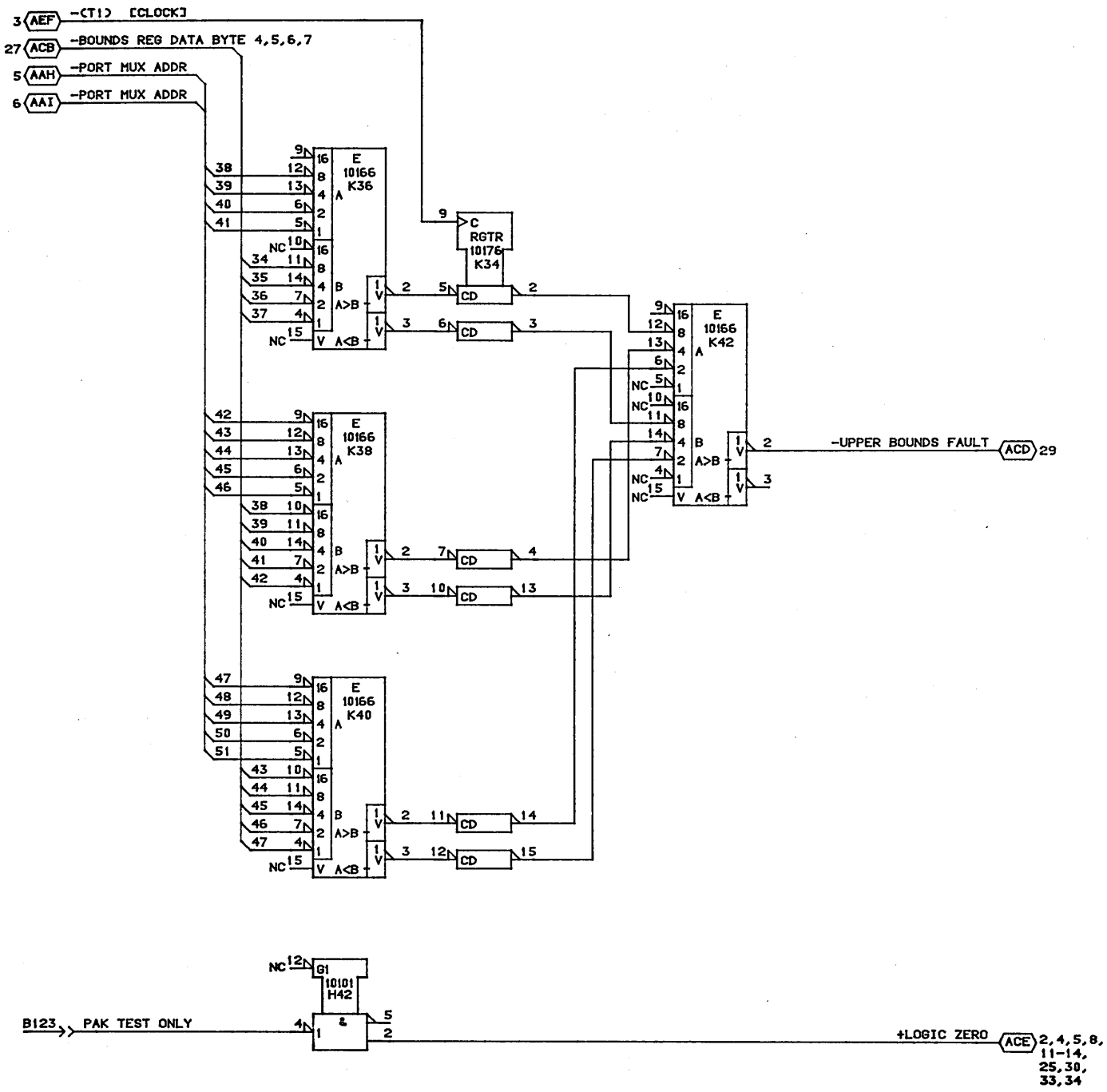

CONTROL DATA CANADA LTD	UPPER BOUNDS COMPARE 210 PAK ASSEMBLY TYPE: 1DA0	C		A
		22-APR-85	SHEET 28	

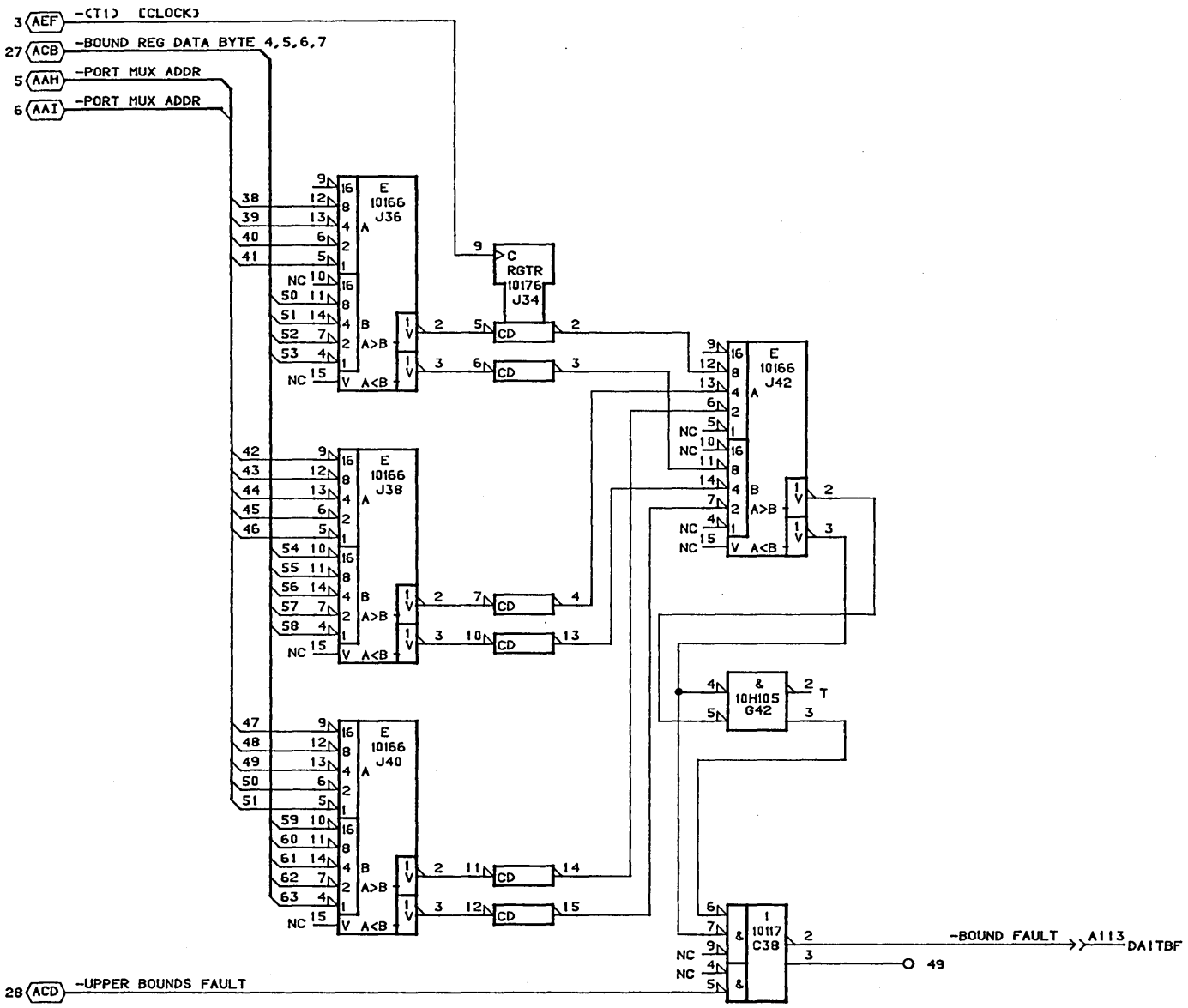

CONTROL DATA CANADA LTD	LOWER BOUNDS COMPARE 210 PAK ASSEMBLY TYPE: 1DA0	C		A
		22-APR-85	SHEET 29	

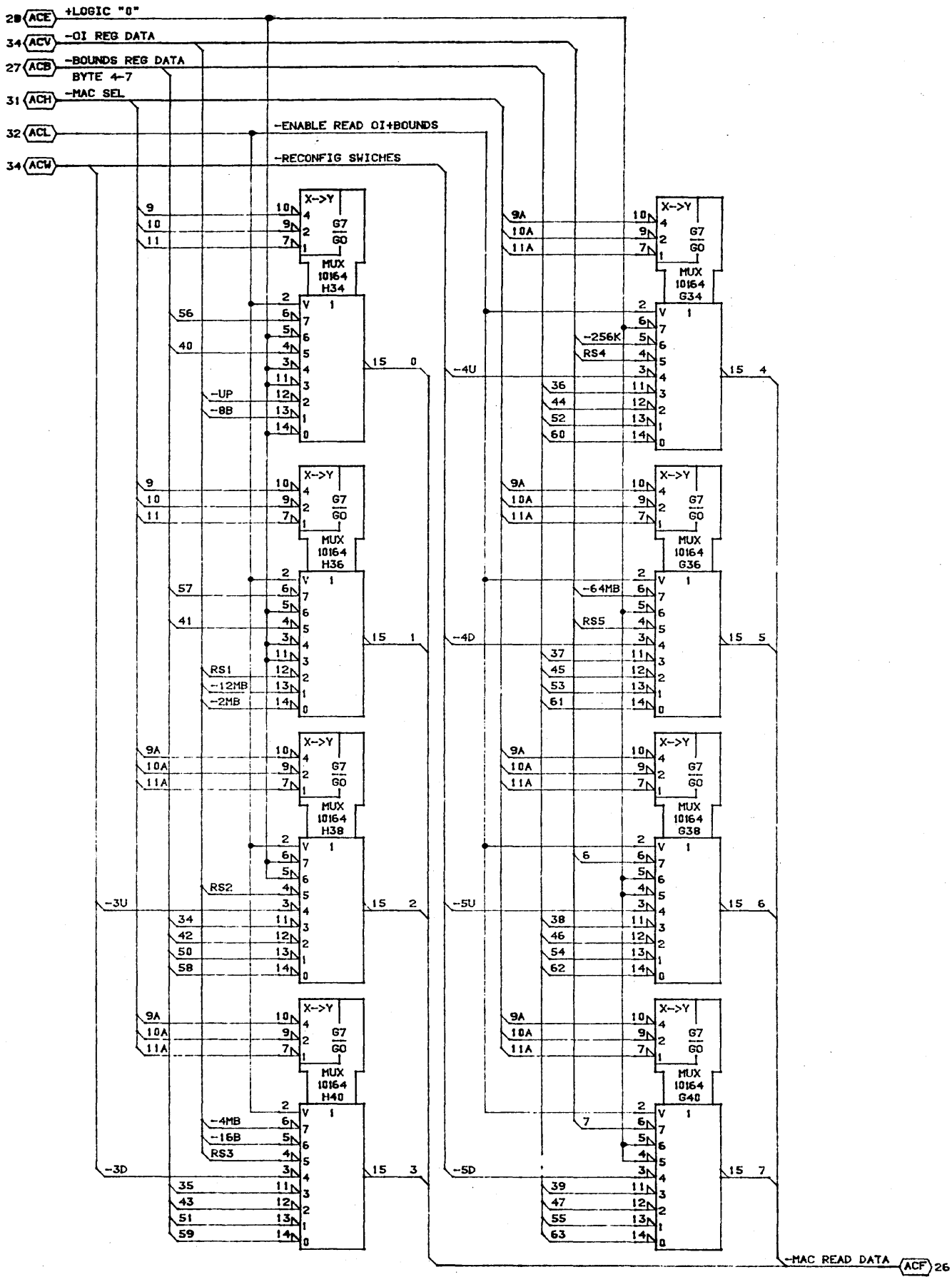

CONTROL DATA CANADA LTD	MAC READ MUX 210 PAK ASSEMBLY TYPE: 1DA0	C		A
		22-APR-85	SHEET 30	

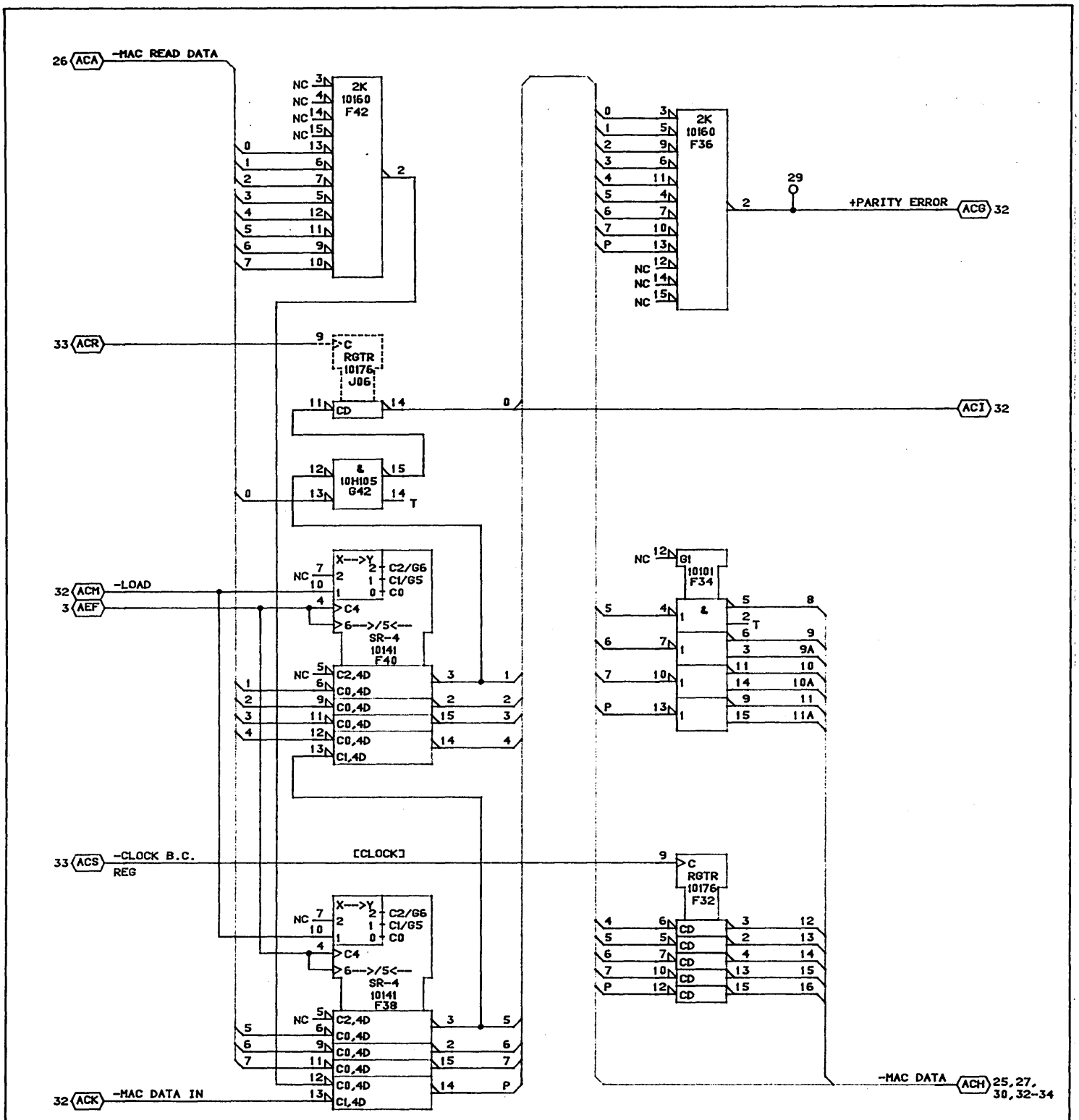

CONTROL DATA CANADA LTD	MAC INTERFACE 210 PAK ASSEMBLY TYPE: 1DA0	C		A
		22-APR-85	SHEET 31	

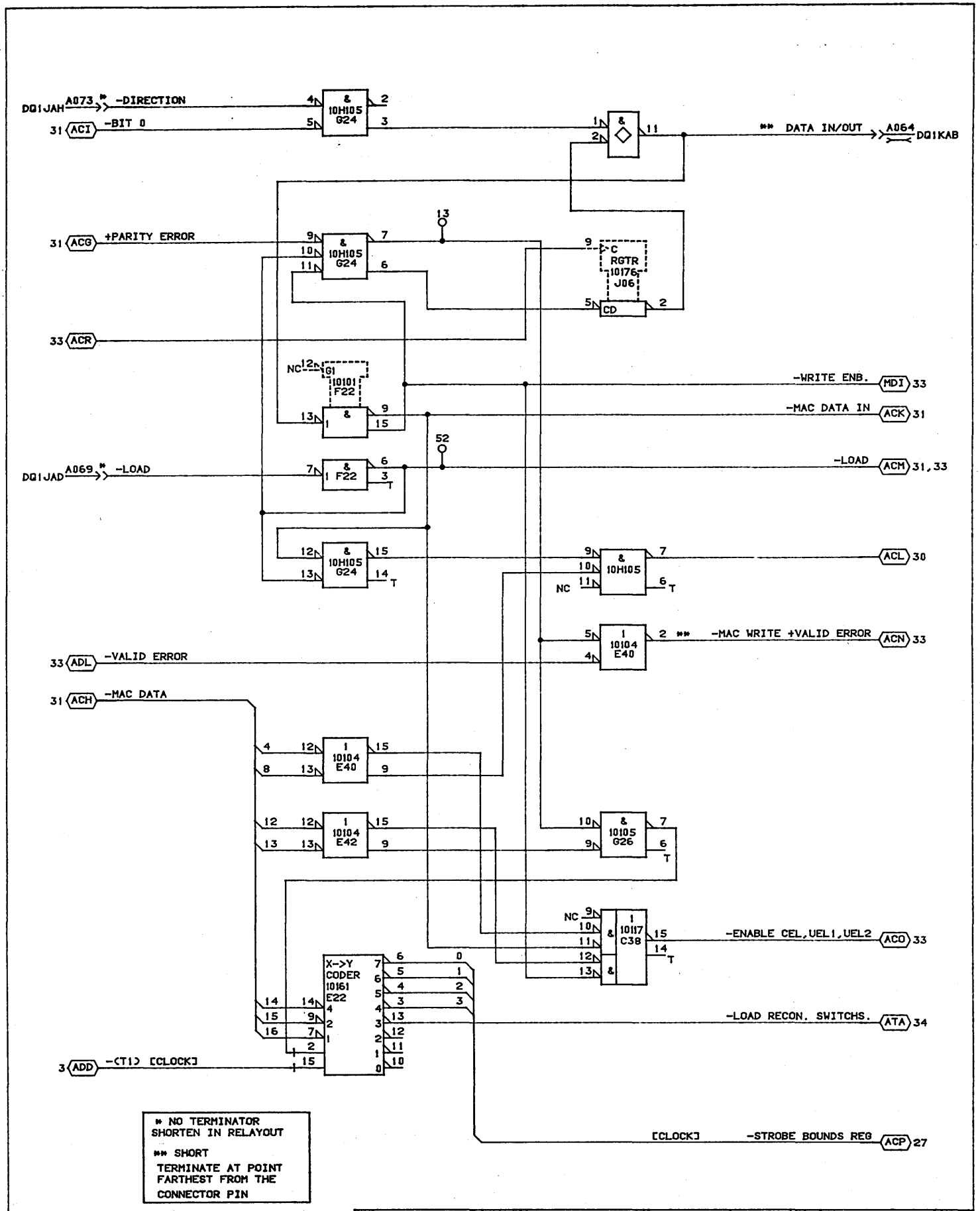

CONTROL DATA CANADA LTD	MAC CONTROL 210 PAK ASSEMBLY TYPE: 1DA0	C		B
		01-AUG-85	SHEET 32	

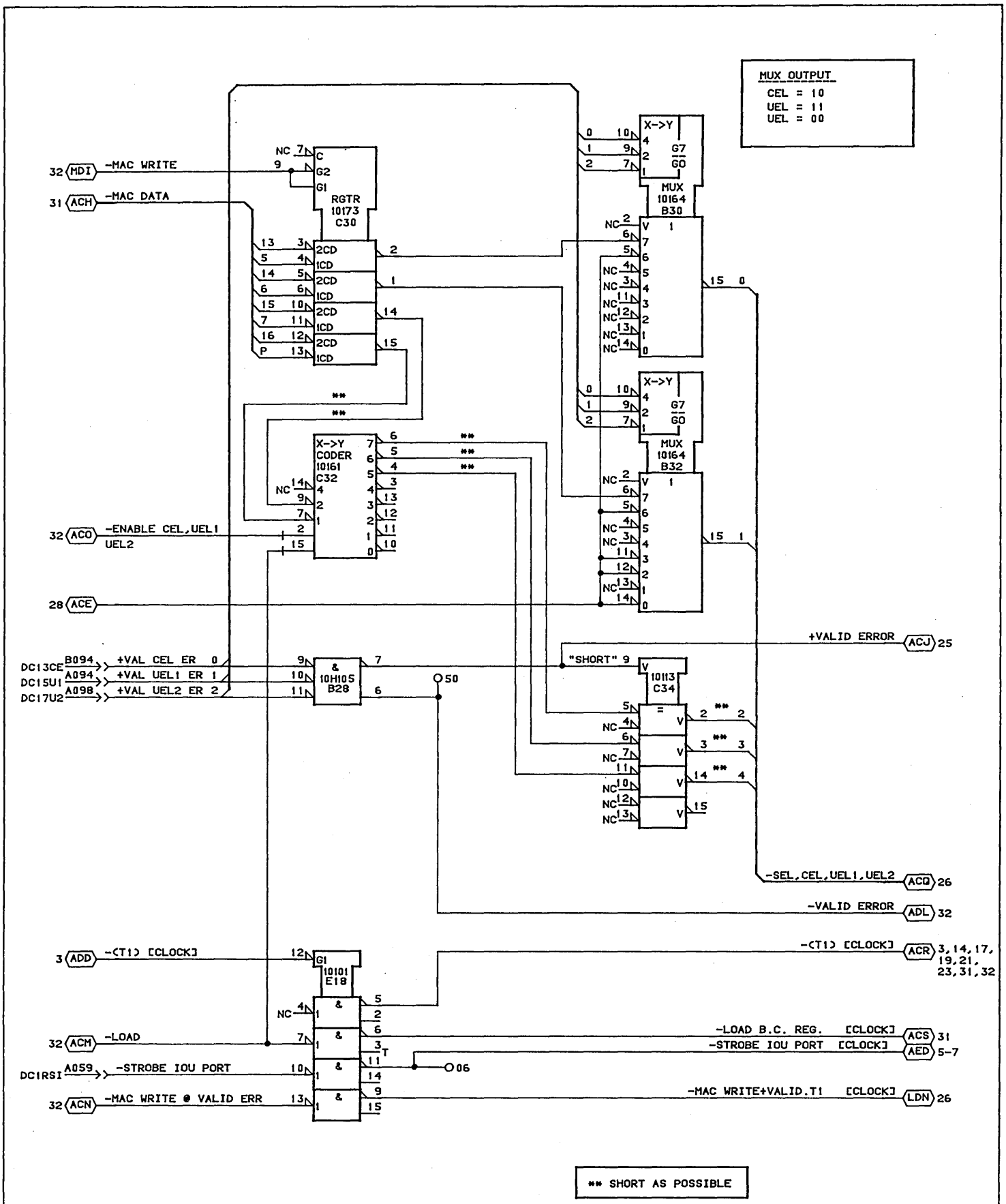

CONTROL DATA CANADA LTD	MAC CONTROL 210 PAK ASSEMBLY TYPE: 1DA0	C		A
		22-APR-85	SHEET 33	

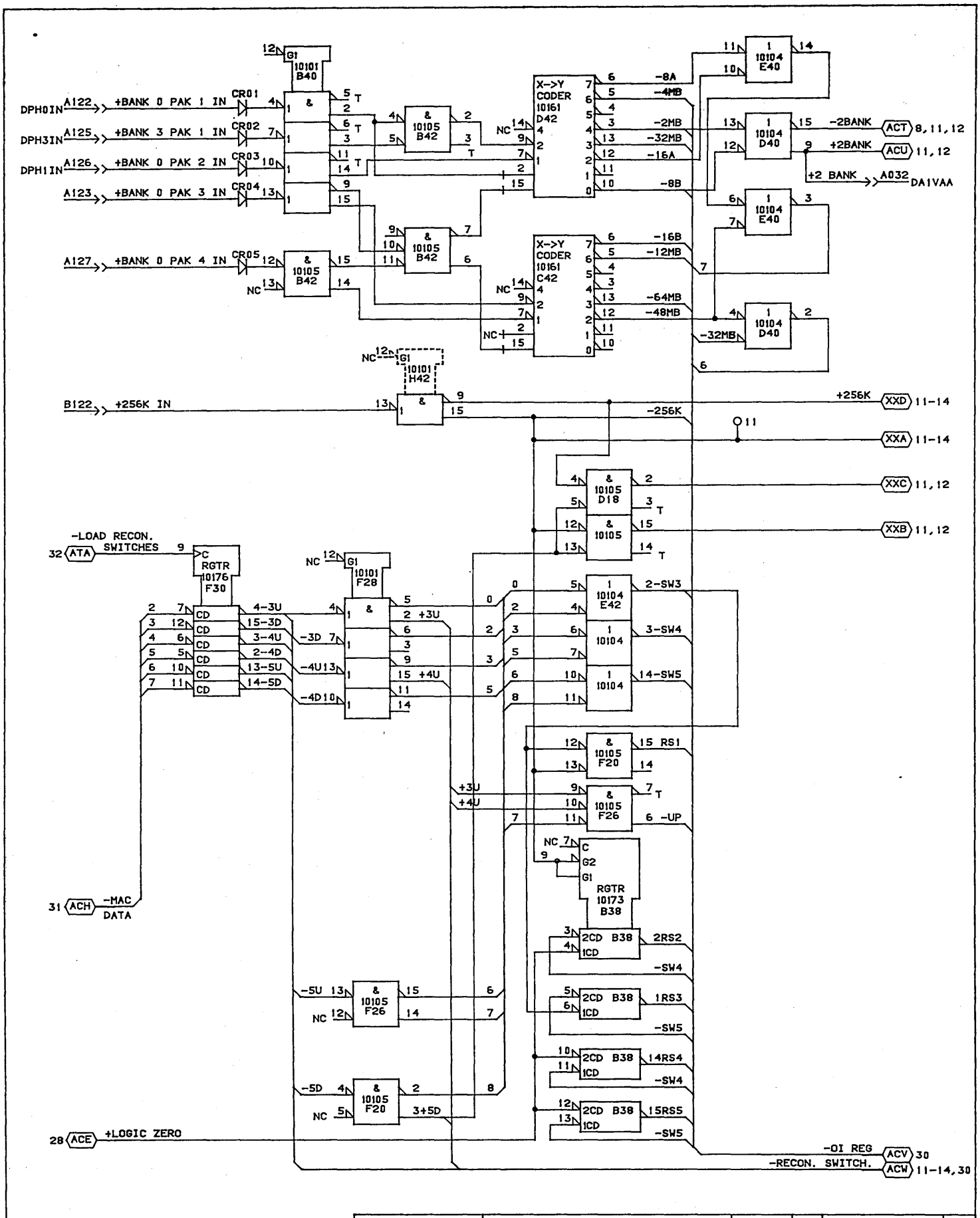

CONTROL DATA CANADA LTD	O/I REGISTER 210 PAK ASSEMBLY TYPE: 1DA0	C		B
		01-AUG-85	SHEET 34	

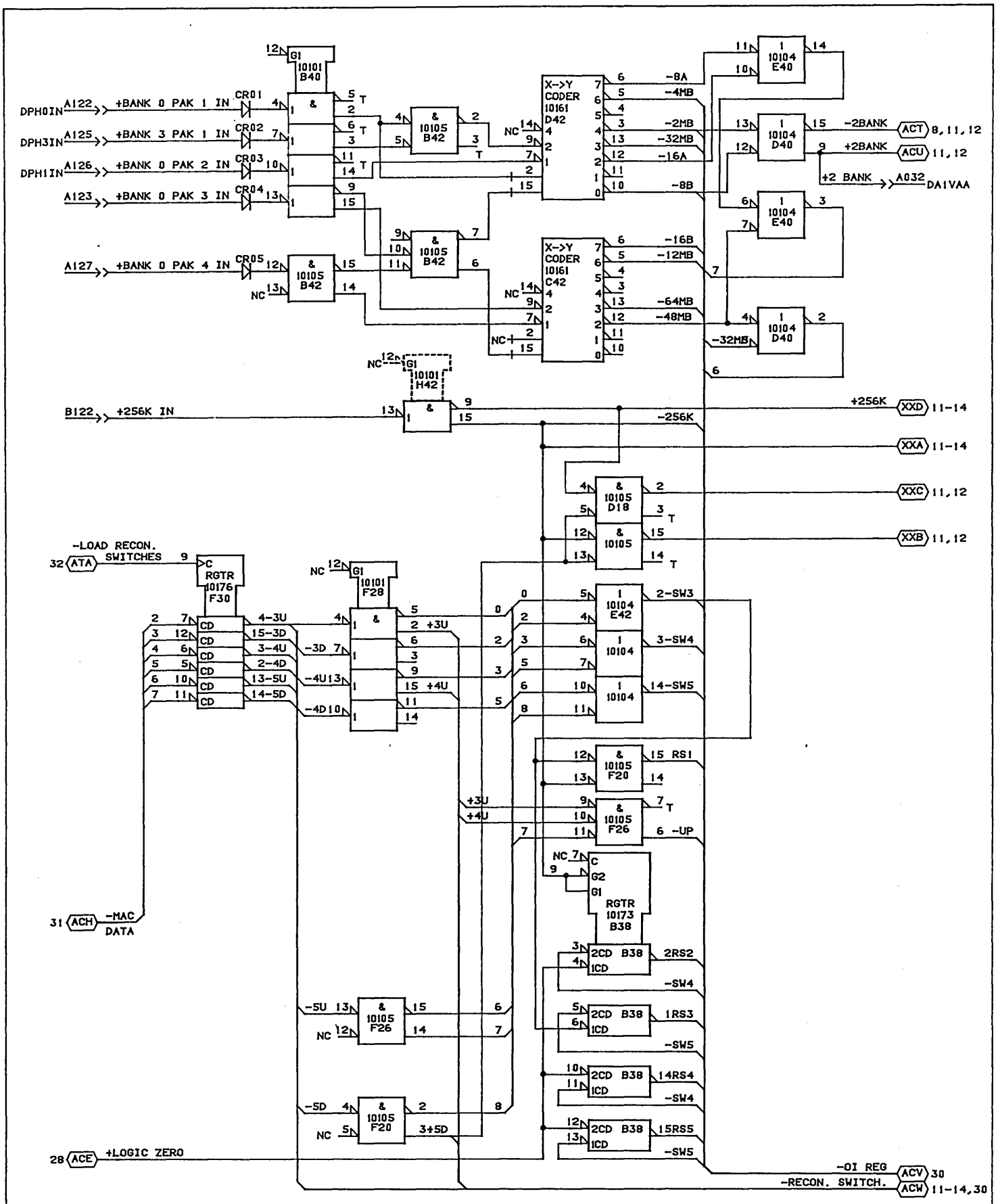

NOTE: THIS DRAWING IS APPLICABLE ONLY TO PWB 19268189 AND 19268838

CONTROL DATA CANADA LTD	O/I REGISTER 210 PAK ASSEMBLY TYPE: 1DA0	C		B
		02-AUG-85	SHEET 34A	

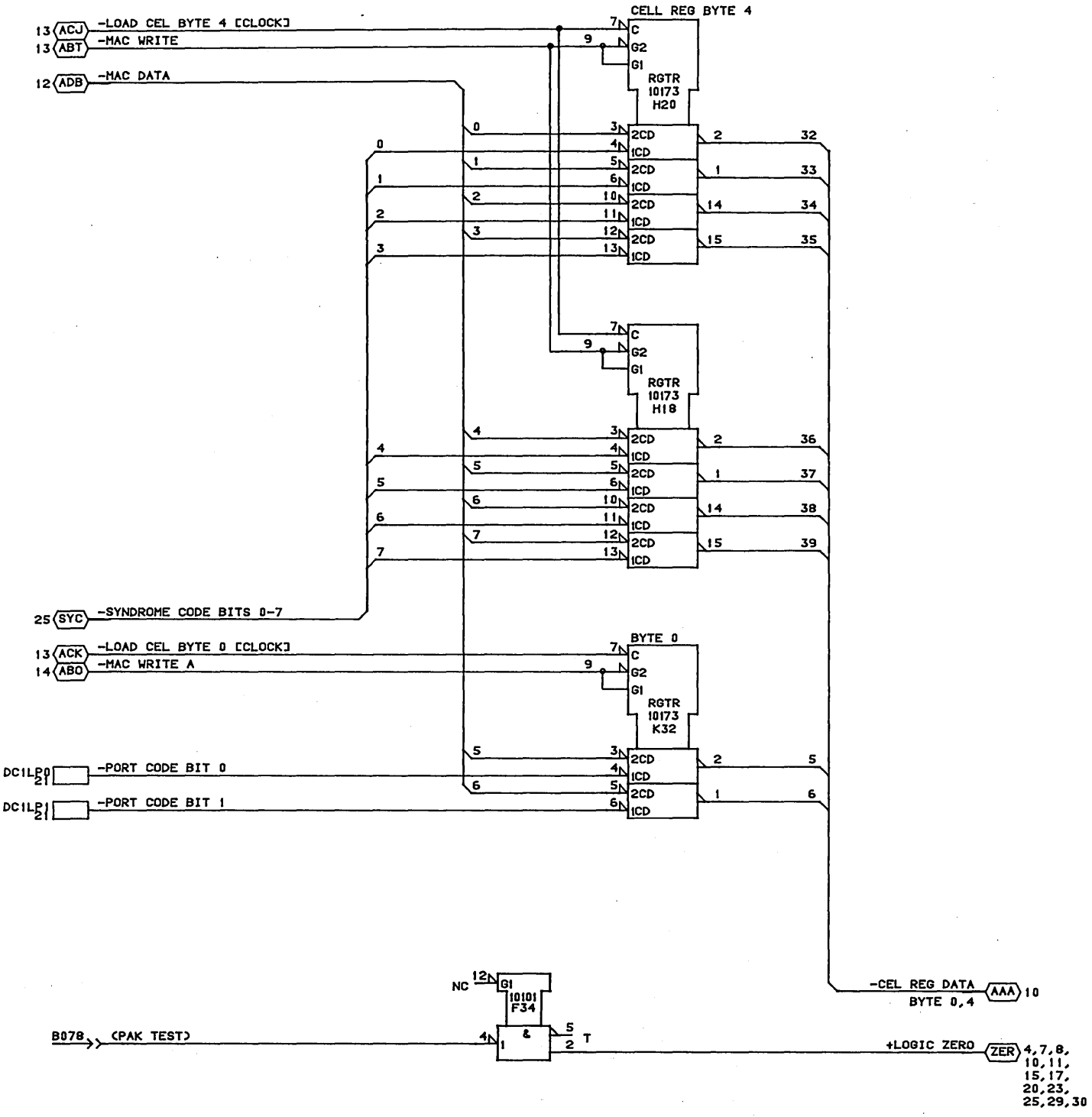

CONTROL DATA CANADA LTD	CELL REGISTER BYTE 0,4 MODULE ASSY:210 PAK TYPE: 1DC0	C		A
		23-APR-85	SHEET 02	

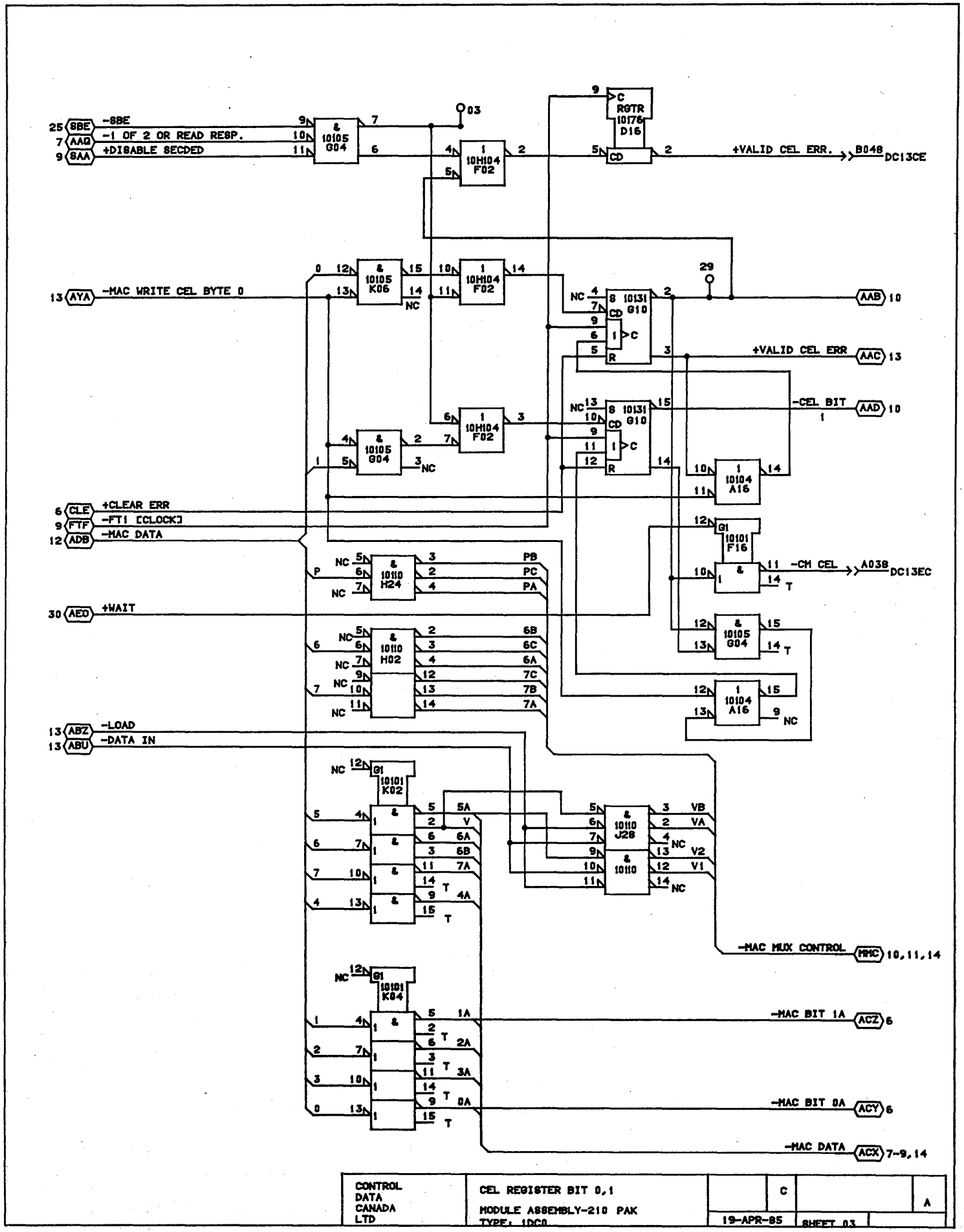
-SBE
-1 OF 2 OR READ RESP.
+DISABLE SECDED
10105 G04
10H104 F02
RGTR 10176 D16
+VALID CEL ERR.
B048 DC13CE
-MAC WRITE CEL BYTE 0
10105 K06
10131 G10
+VALID CEL ERR
-CEL BIT 1
10104 A16
+CLEAR ERR
-FT1 [CLOCK]
-MAC DATA
10101 F16
-CM CEL
A038 DC13EC
+WAIT
10110 H24
10110 H02
-LOAD
-DATA IN
10101 K02
10110 J28
-MAC MUX CONTROL
10101 K04
-MAC BIT 1A
-MAC BIT 0A
-MAC DATA
CONTROL DATA CANADA LTD
CEL REGISTER BIT 0,1
MODULE ASSEMBLY-210 PAK
TYPE: 1DC0
19-APR-85
SHEET 03

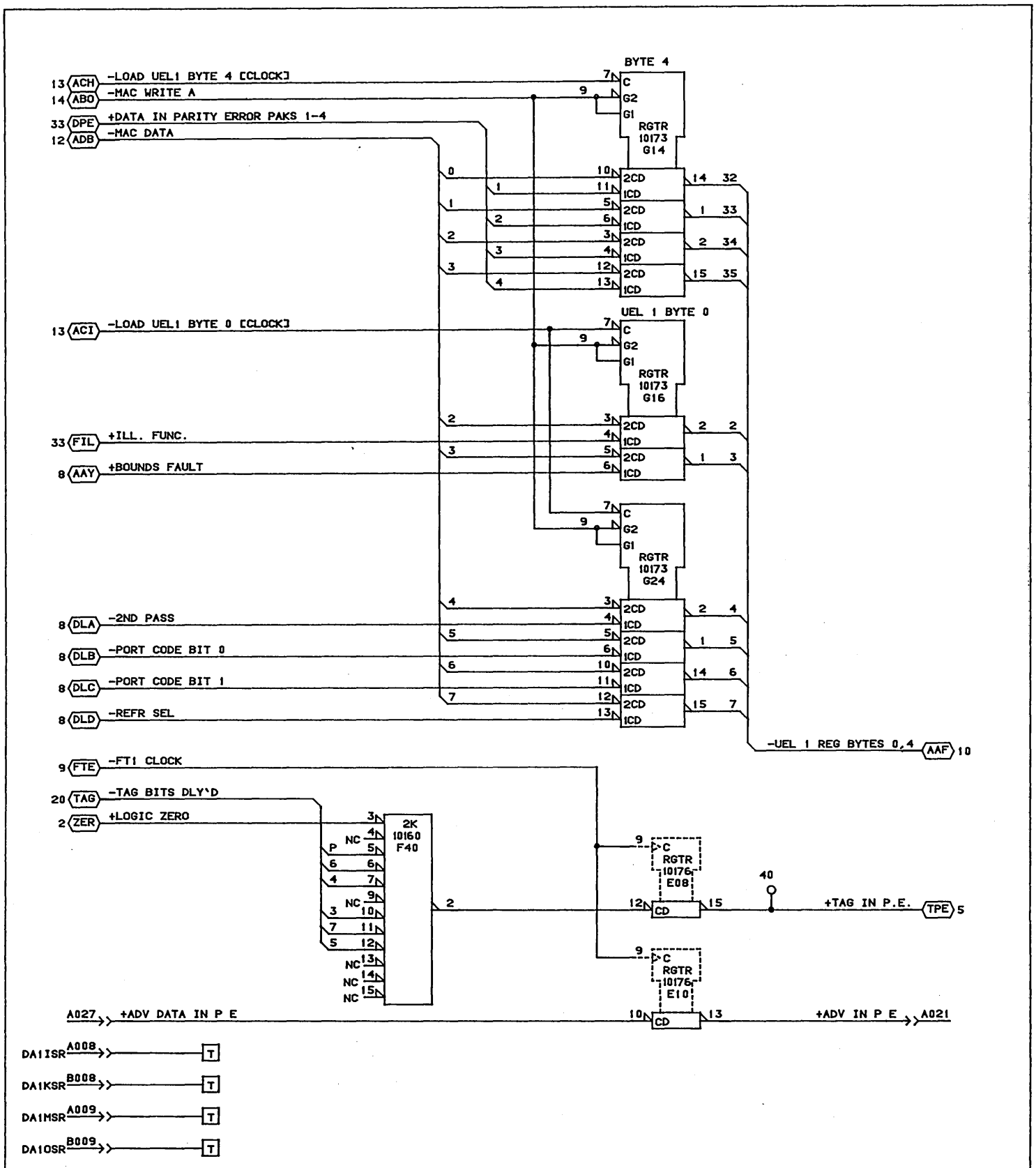

CONTROL DATA CANADA LTD	UEL1 BYTE 0,4 MODULE ASSEMBLY-210 PAK TYPE: 1DC0	C		A
		25-APR-85	SHEET 04	

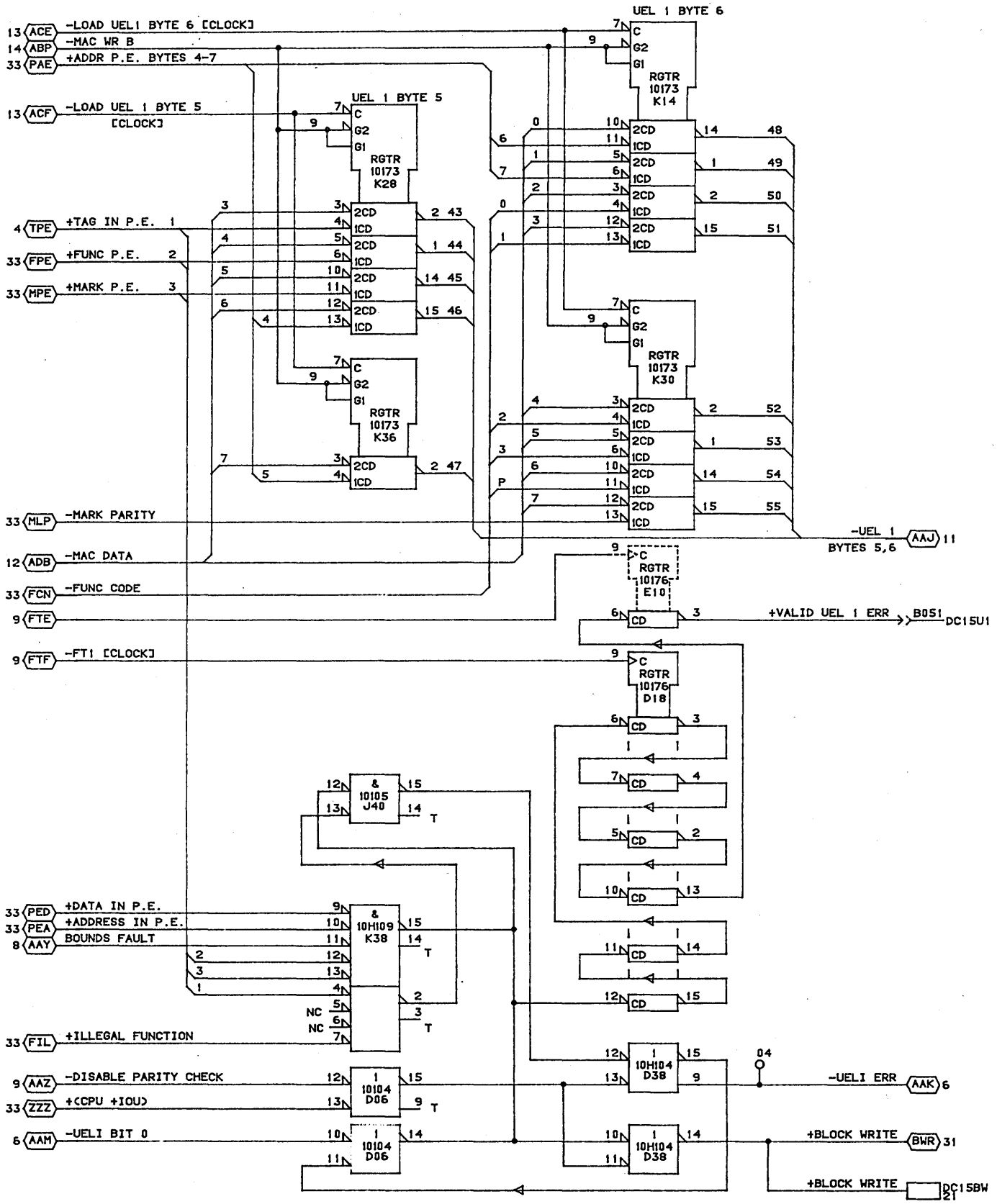

CONTROL DATA CANADA LTD	UEL1 BYTE 5,6 MODULE ASSEMBLY-210 PAK TYPE: 1DC0	C	B
		06-MAR-86	SHEET 05

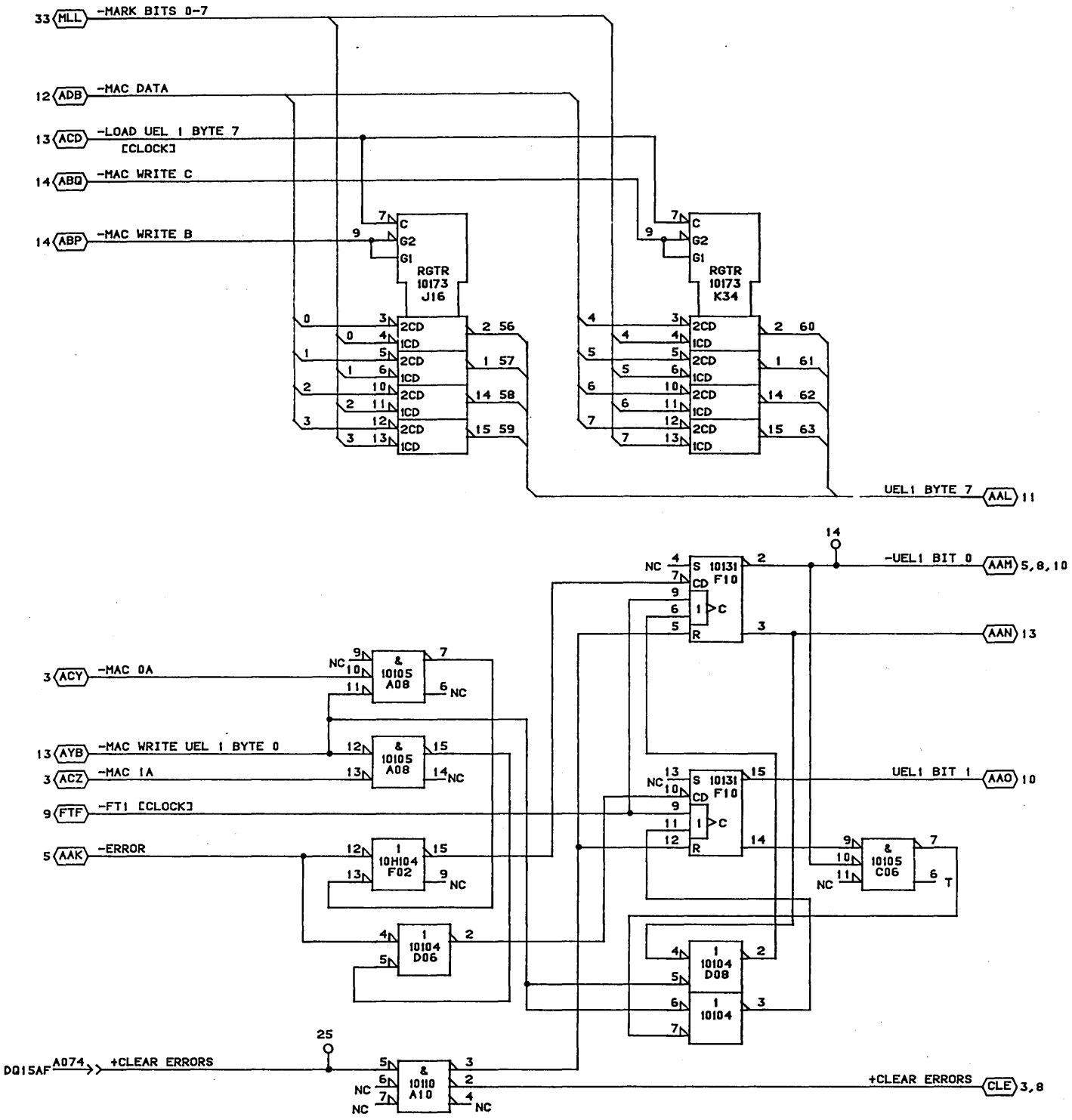

CONTROL DATA CANADA LTD	UEL1 REGISTER BYTE 7,BIT 0,1 MODULE ASSEMBLY-210 PAK TYPE: 1DC0	C		A
		23-APR-85	SHEET 06	

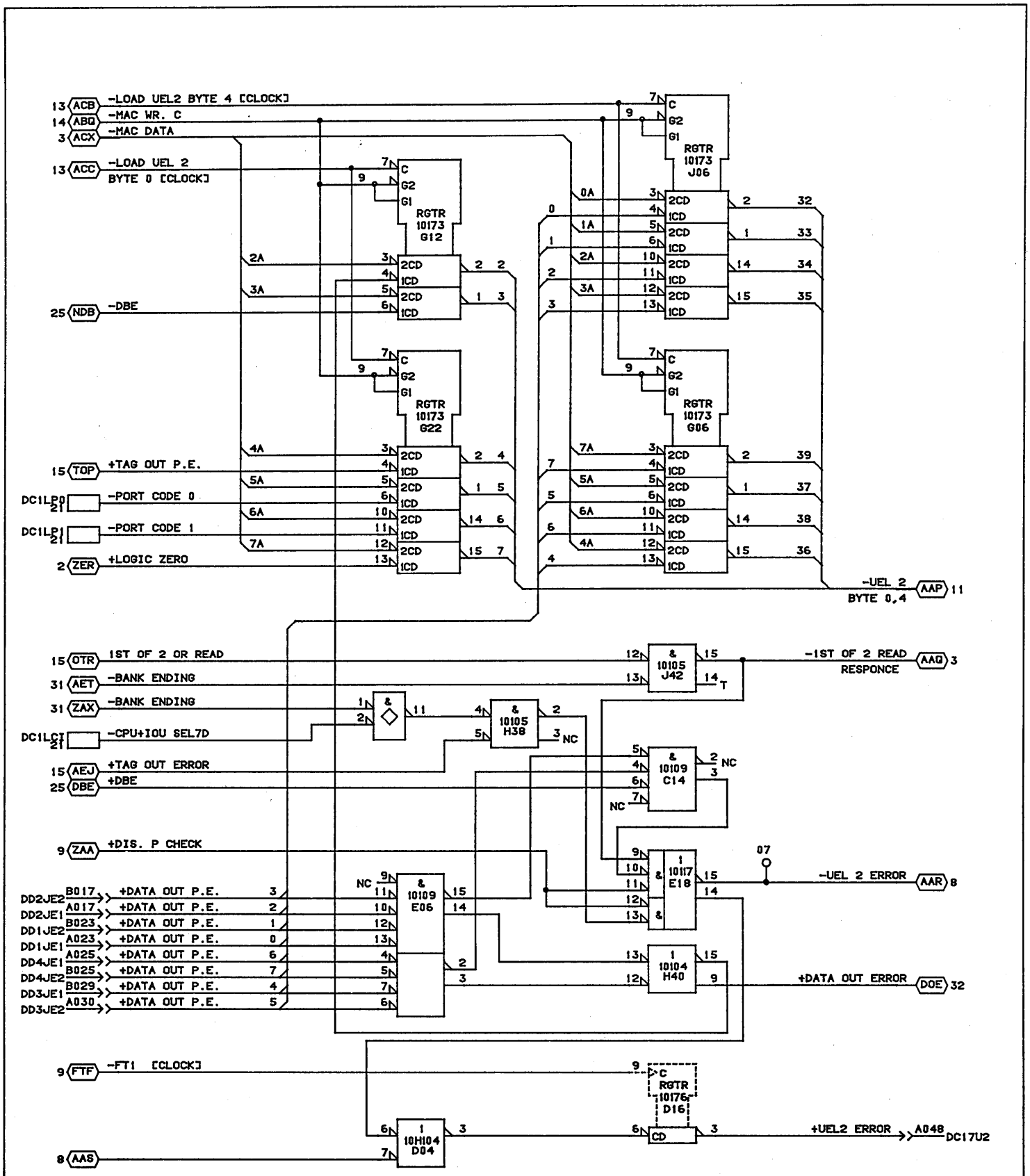

CONTROL DATA CANADA LTD	UEL2 BYTE 0,4 MODULE ASSY:210 PAK TYPE: 1DC0	C		A
		23-APR-85	SHEET 07	

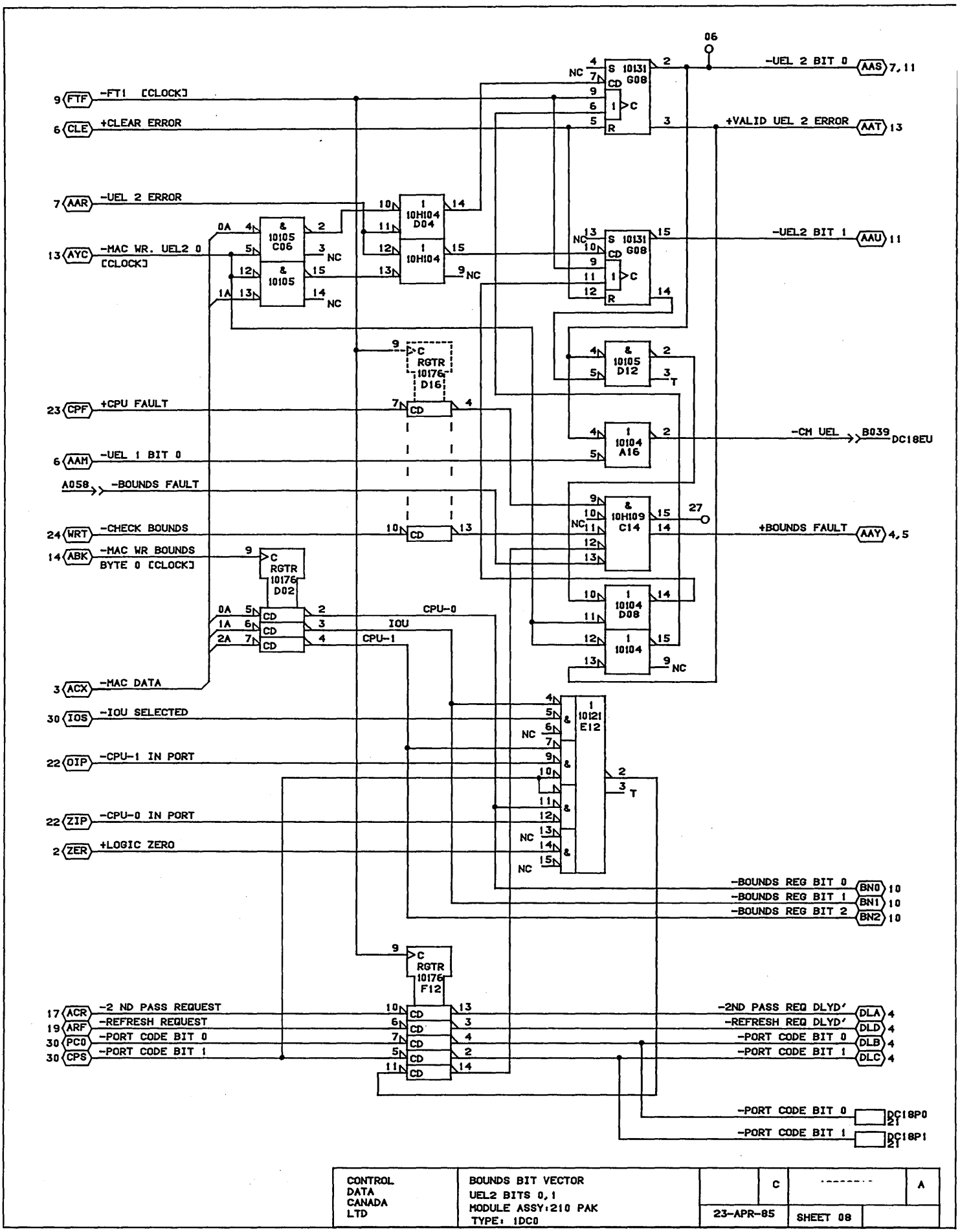
-FT1 [CLOCK]
+CLEAR ERROR
-UEL 2 ERROR
-MAC WR. UEL2 0 [CLOCK]
+CPU FAULT
-UEL 1 BIT 0
-BOUNDS FAULT
-CHECK BOUNDS
-MAC WR BOUNDS BYTE 0 [CLOCK]
-MAC DATA
-IOU SELECTED
-CPU-1 IN PORT
-CPU-0 IN PORT
+LOGIC ZERO
-2 ND PASS REQUEST
-REFRESH REQUEST
-PORT CODE BIT 0
-PORT CODE BIT 1
-UEL 2 BIT 0
+VALID UEL 2 ERROR
-UEL2 BIT 1
-CM UEL
+BOUNDS FAULT
-BOUNDS REG BIT 0
-BOUNDS REG BIT 1
-BOUNDS REG BIT 2
-2ND PASS REQ DLYD'
-REFRESH REQ DLYD'
-PORT CODE BIT 0
-PORT CODE BIT 1
CPU-0
IOU
CPU-1
CONTROL DATA CANADA LTD
BOUNDS BIT VECTOR
UEL2 BITS 0,1
MODULE ASSY:210 PAK
TYPE: 1DC0
23-APR-85
SHEET 08

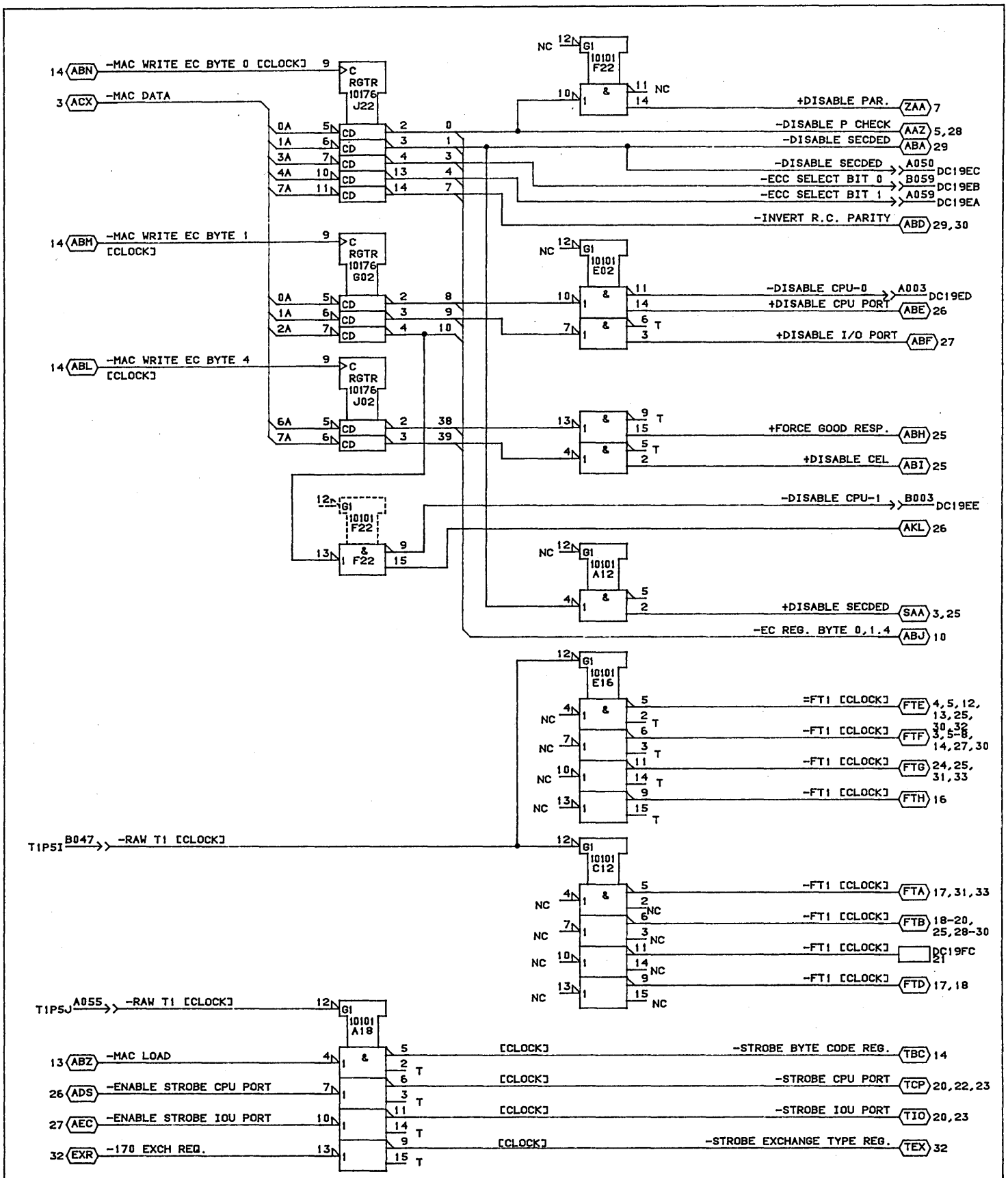

CONTROL DATA CANADA LTD	CLOCK FANOUT EC REGISTER BYTE 0,1,4 MODULE ASSY: 210 PAK TYPE: 1DC0	C		B
		05-MAR-86	SHEET 09	

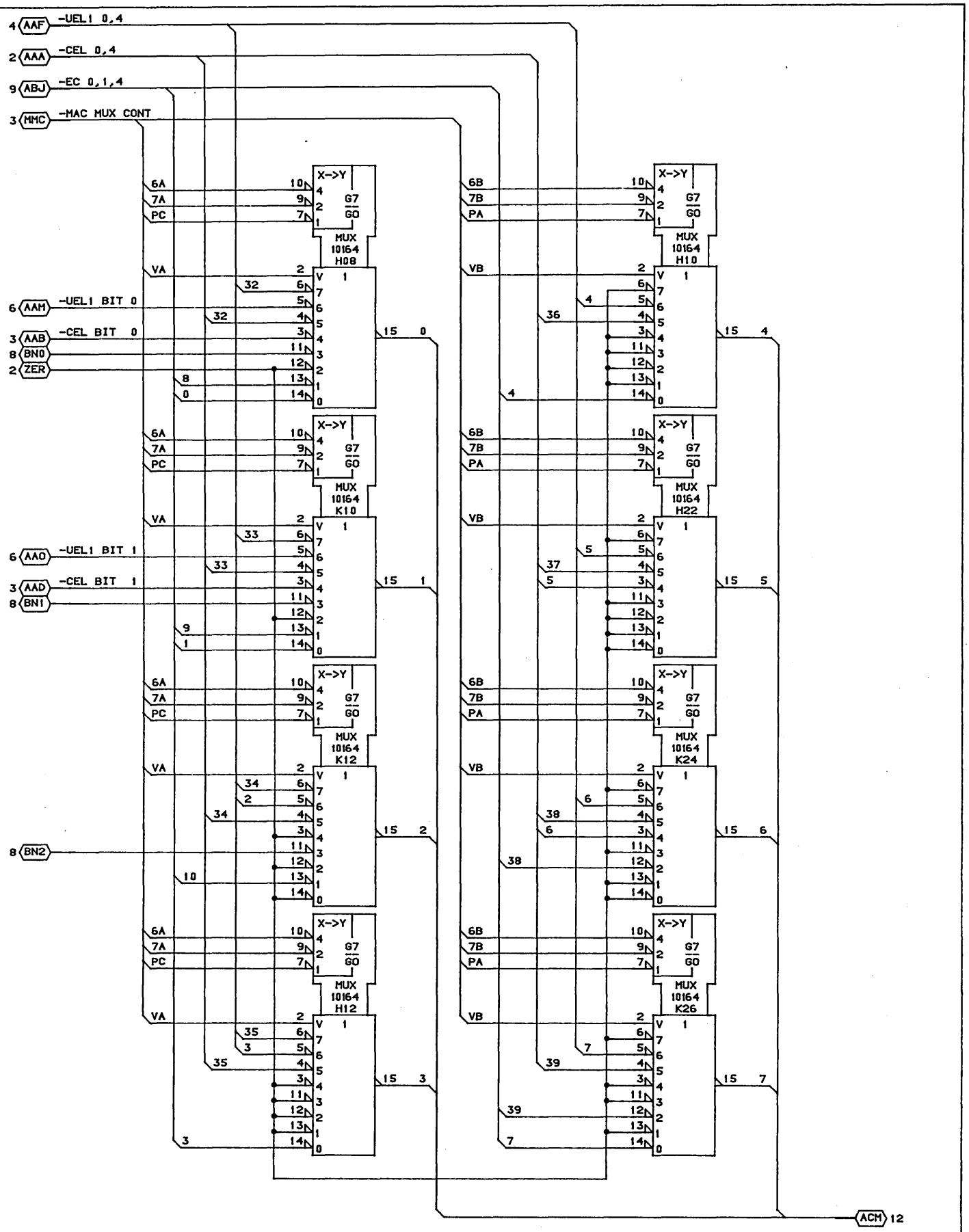

CONTROL DATA CANADA LTD	MAC READ MUX 1 MODULE ASSY:210 PAK TYPE:1DC0	C		A
		25-APR-85	SHEET 10	

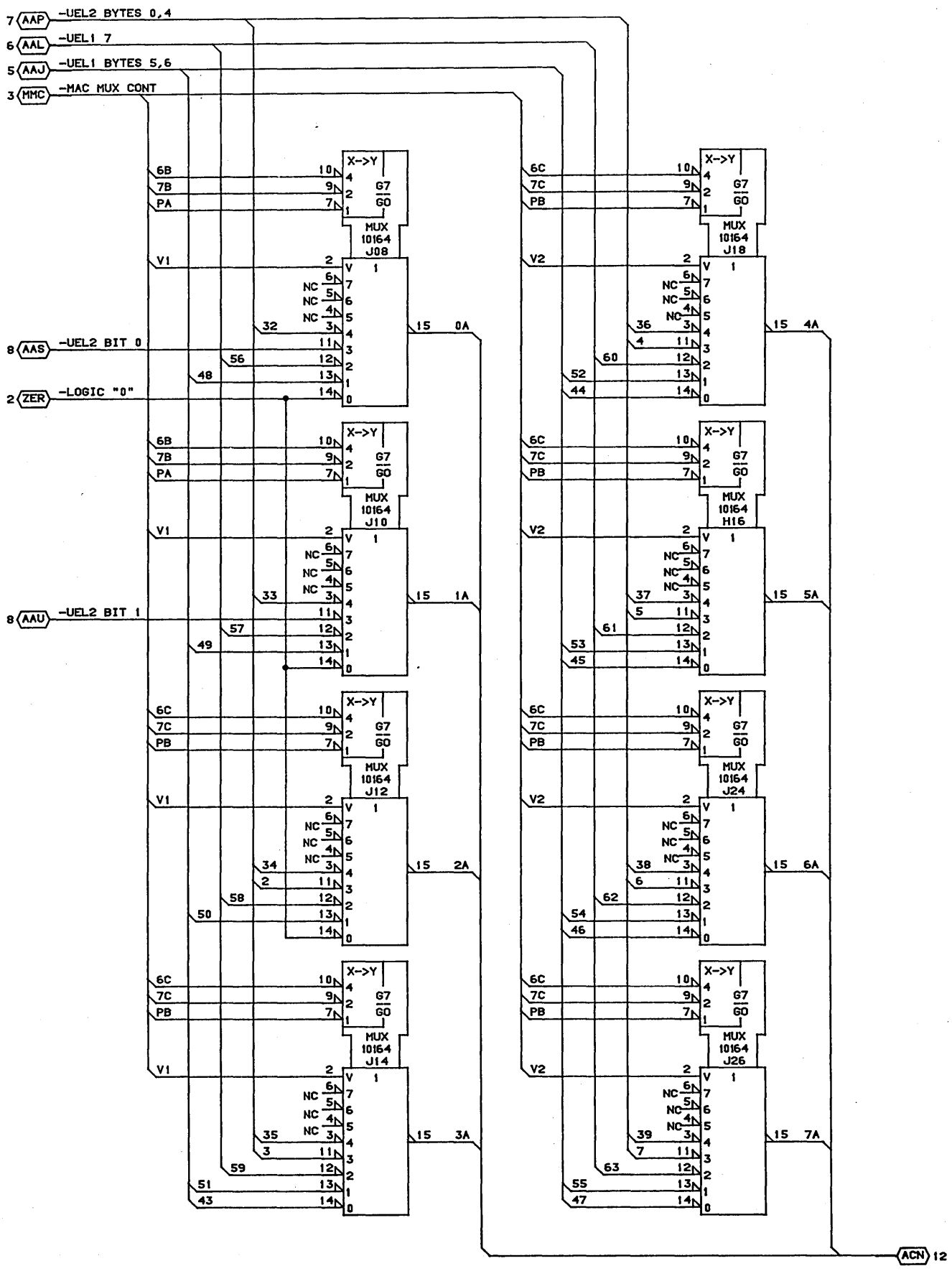

CONTROL DATA CANADA LTD	MAC READ MUX 2 MODULE ASSY:210 PAK TYPE: 1DC0		C	A
		25-APR-85	SHEET 11	

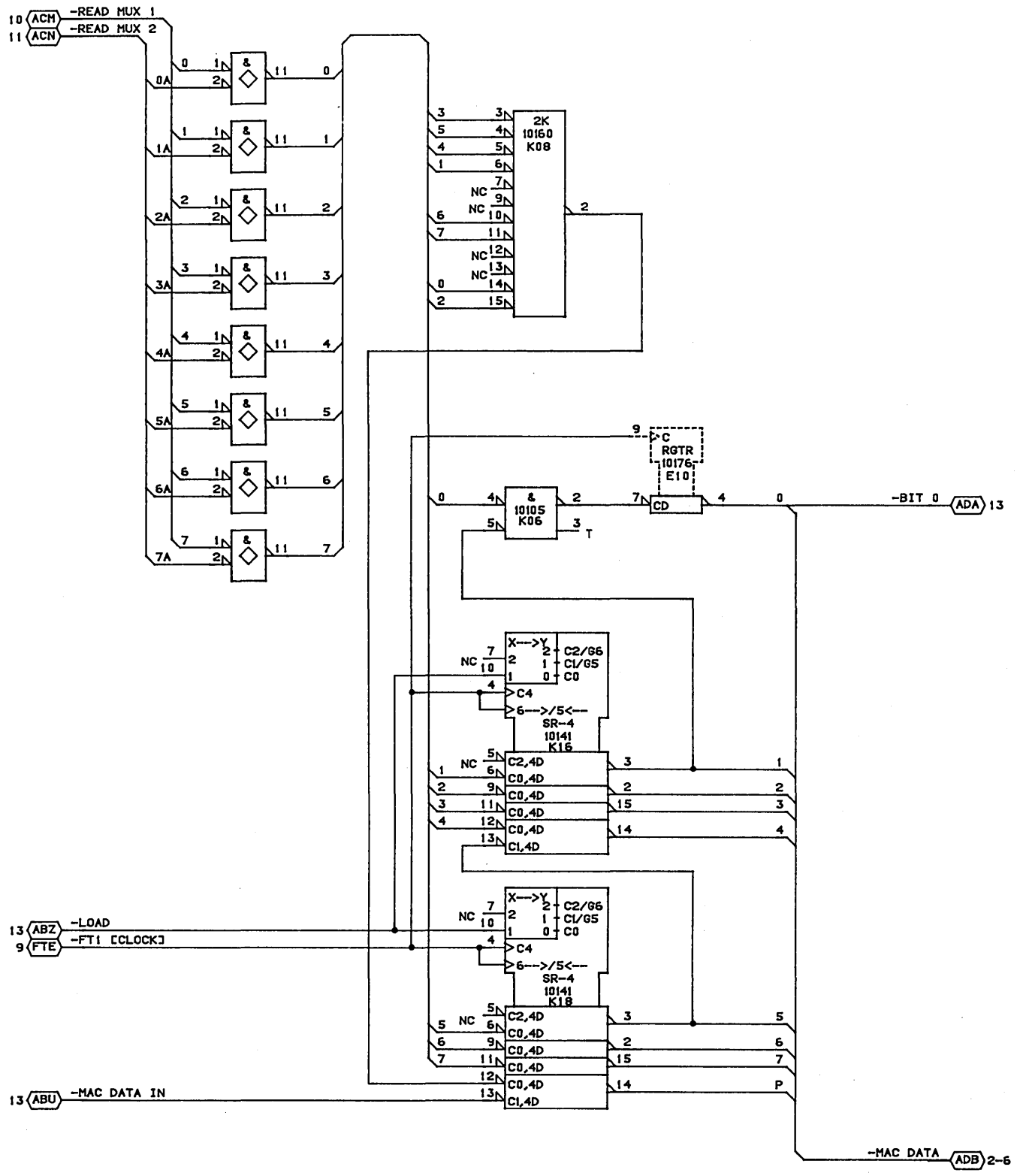

CONTROL DATA CANADA LTD	MAC INTERFACE MODULE ASSEMBLY-210 PAK TYPE: 1DC0	C		A
		25-APR-85	SHEET 12	

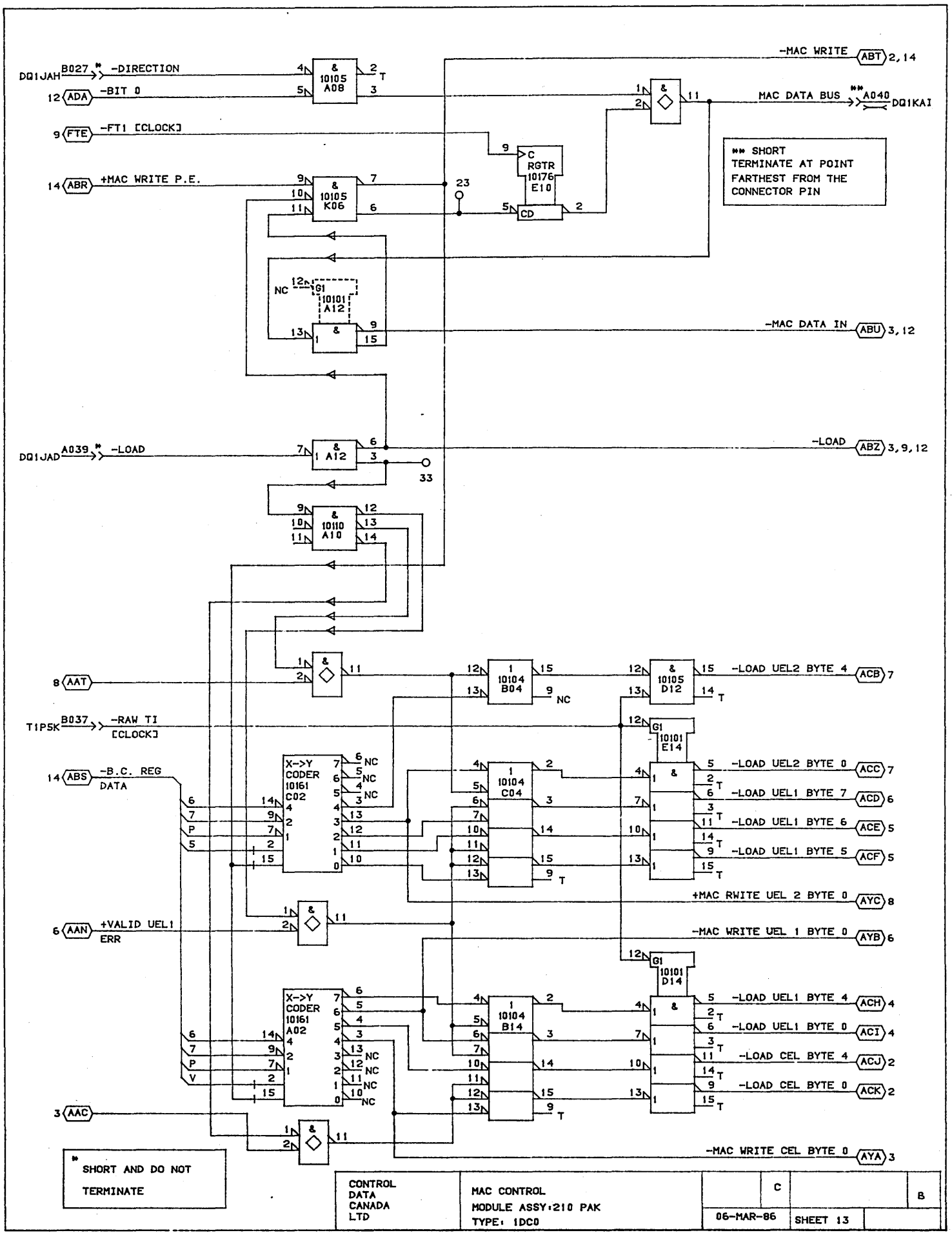
DQ1JAH B027 -DIRECTION
12 ADA -BIT 0
9 FTE -FT1 [CLOCK]
14 ABR +MAC WRITE P.E.
DQ1JAD A039 -LOAD
8 AAT
T1P5K B037 -RAW TI [CLOCK]
14 ABS -B.C. REG DATA
6 AAN +VALID UEL1 ERR
3 AAC
-MAC WRITE ABT 2,14
MAC DATA BUS A040 DQ1KAI
-MAC DATA IN ABU 3,12
-LOAD ABZ 3,9,12
-LOAD UEL2 BYTE 4 ACB 7
-LOAD UEL2 BYTE 0 ACC 7
-LOAD UEL1 BYTE 7 ACD 6
-LOAD UEL1 BYTE 6 ACE 5
-LOAD UEL1 BYTE 5 ACF 5
+MAC RWITE UEL 2 BYTE 0 AYC 8
-MAC WRITE UEL 1 BYTE 0 AYB 6
-LOAD UEL1 BYTE 4 ACH 4
-LOAD UEL1 BYTE 0 ACI 4
-LOAD CEL BYTE 4 ACJ 2
-LOAD CEL BYTE 0 ACK 2
-MAC WRITE CEL BYTE 0 AYA 3
& 10105 A08
& 10105 K06
C RGTR 10176 E10
CD
G1 10101 A12
& A12
& 10110 A10
1 10104 B04
& 10105 D12
G1 10101 E14
X->Y CODER 10161 C02
1 10104 C04
X->Y CODER 10161 A02
1 10104 B14
G1 10101 D14
** SHORT TERMINATE AT POINT FARTHEST FROM THE CONNECTOR PIN
* SHORT AND DO NOT TERMINATE
CONTROL DATA CANADA LTD
MAC CONTROL
MODULE ASSY:210 PAK
TYPE: 1DC0
C
B
06-MAR-86
SHEET 13

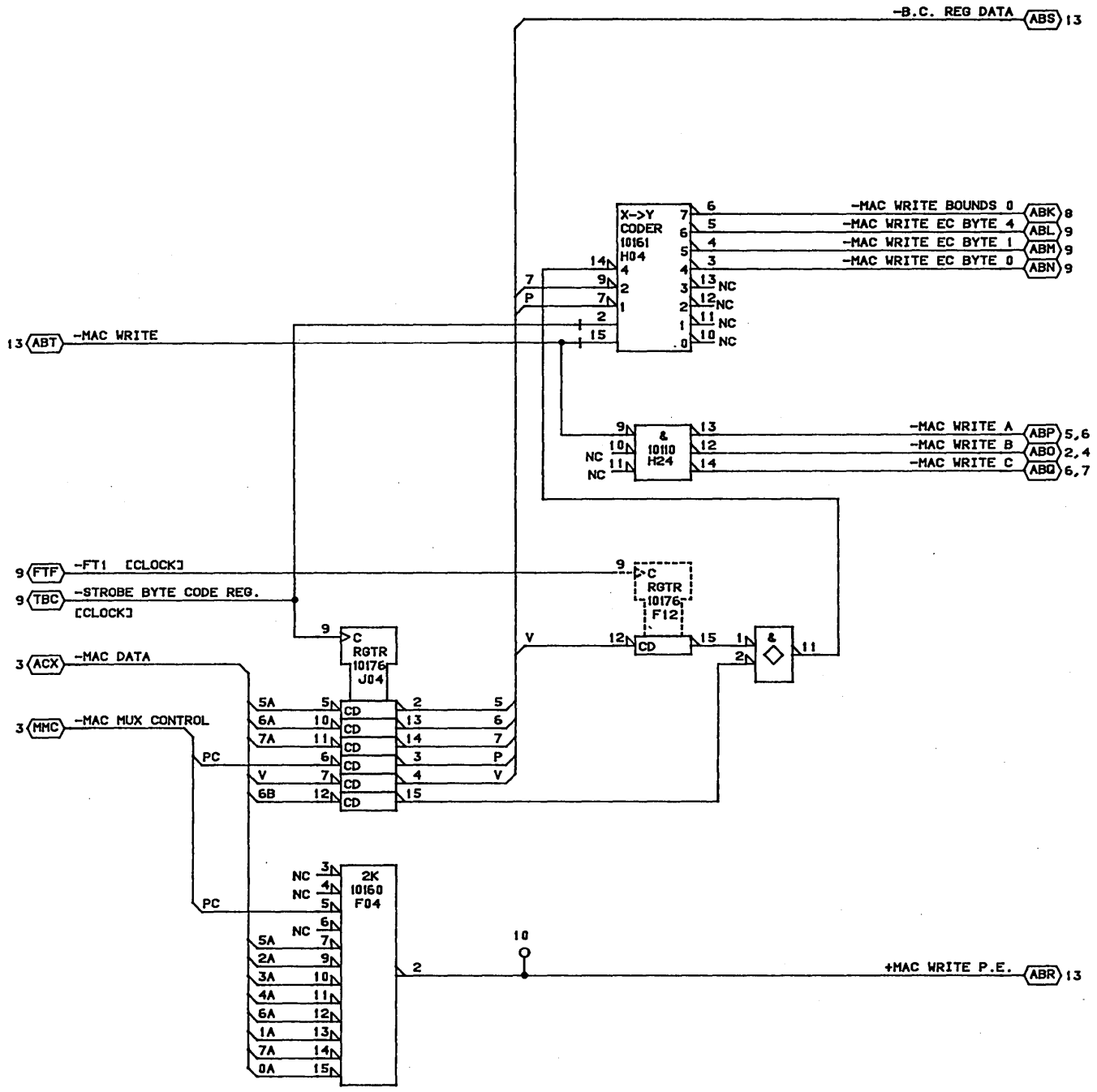

CONTROL DATA CANADA LTD	MAC DATA PARITY CHECK, WRITE ENABLES MODULE ASSY:210 PAK TYPE: 1DC0		C	A
		25-APR-85	SHEET 14	

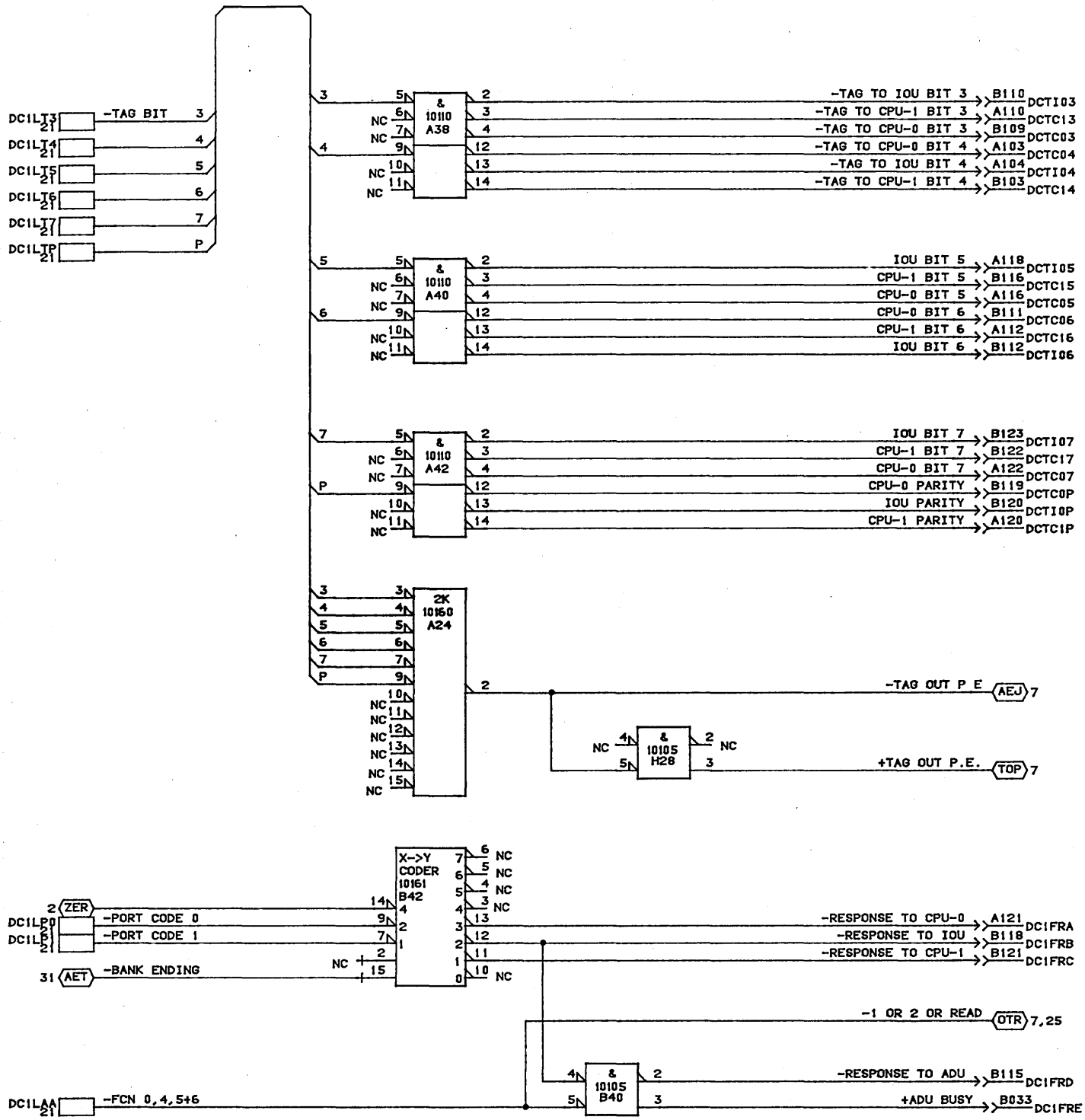

CONTROL DATA CANADA LTD	TAGS OUT RESPONSES TYPE:1DC0	C		A
		25-APR-85	SHEET 15	

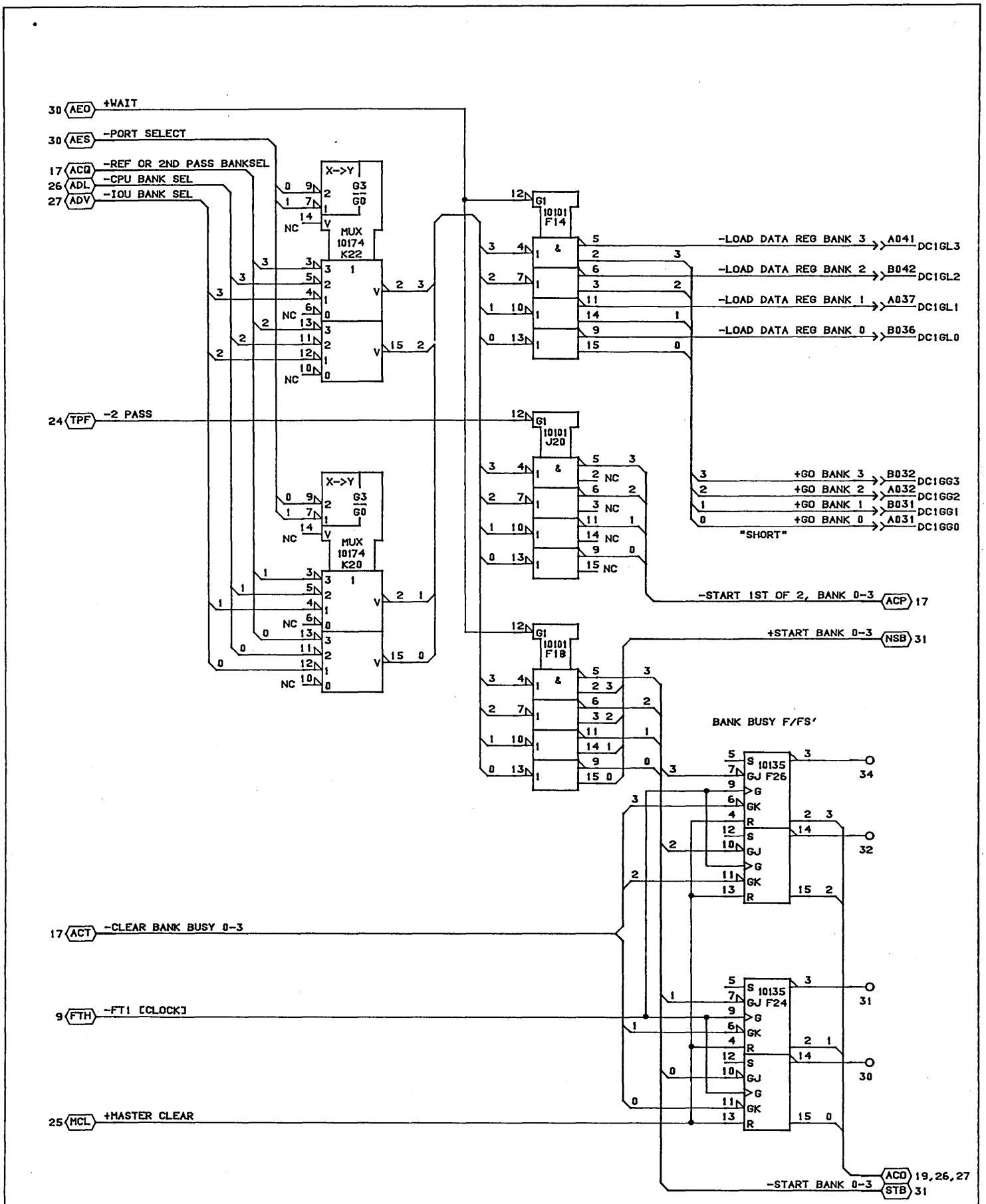

CONTROL DATA CANADA LTD	BANK SELECTS BANK BUSY F/FS' MODULE ASSEMBLY-210 PAK TYPE: 1DC0	C		A
		25-APR-85	SHEET 16	

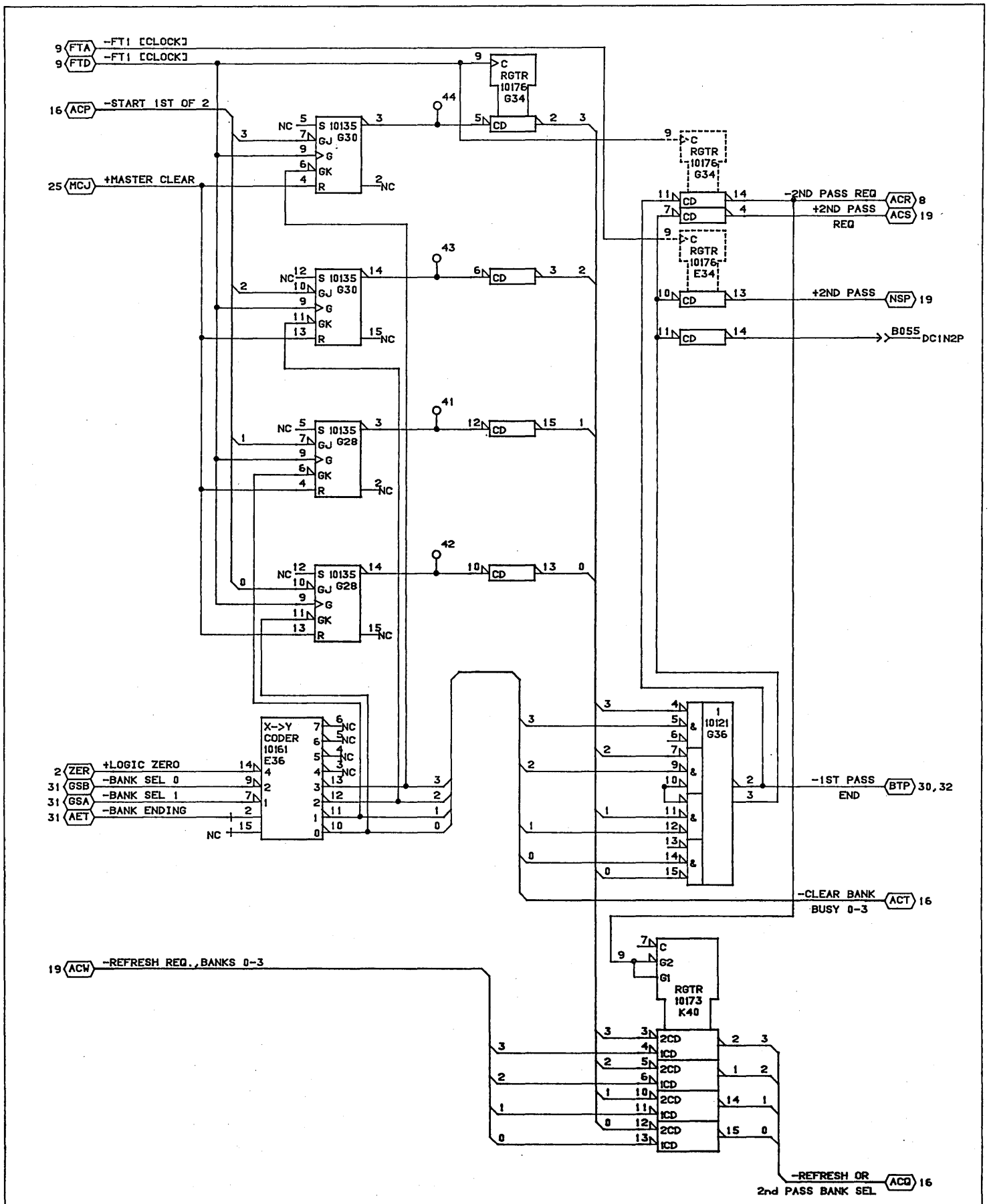

CONTROL DATA CANADA LTD	FIRST PASS F/FS' MODULE ASSY:210 PAK TYPE: 1DC0	C		A
		25-APR-85	SHEET 17	

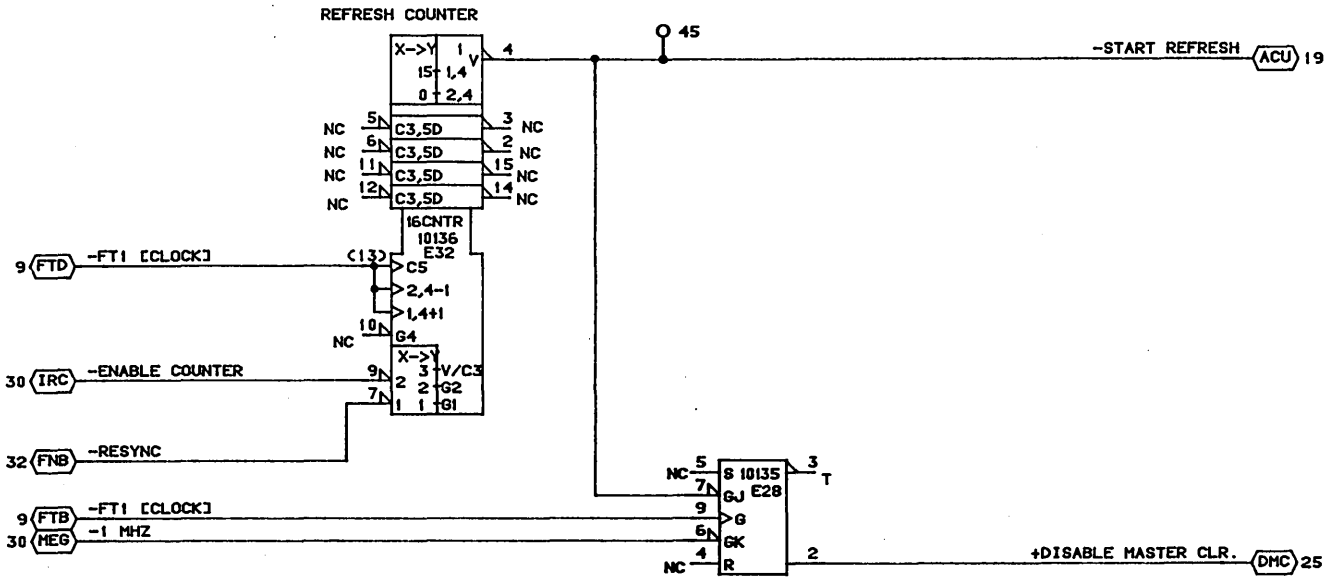

CONTROL DATA CANADA LTD	REFRESH COUNTER MODULE ASSY:210 PAK TYPE: 1DC0		C	A
		25-APR-85	SHEET 18	

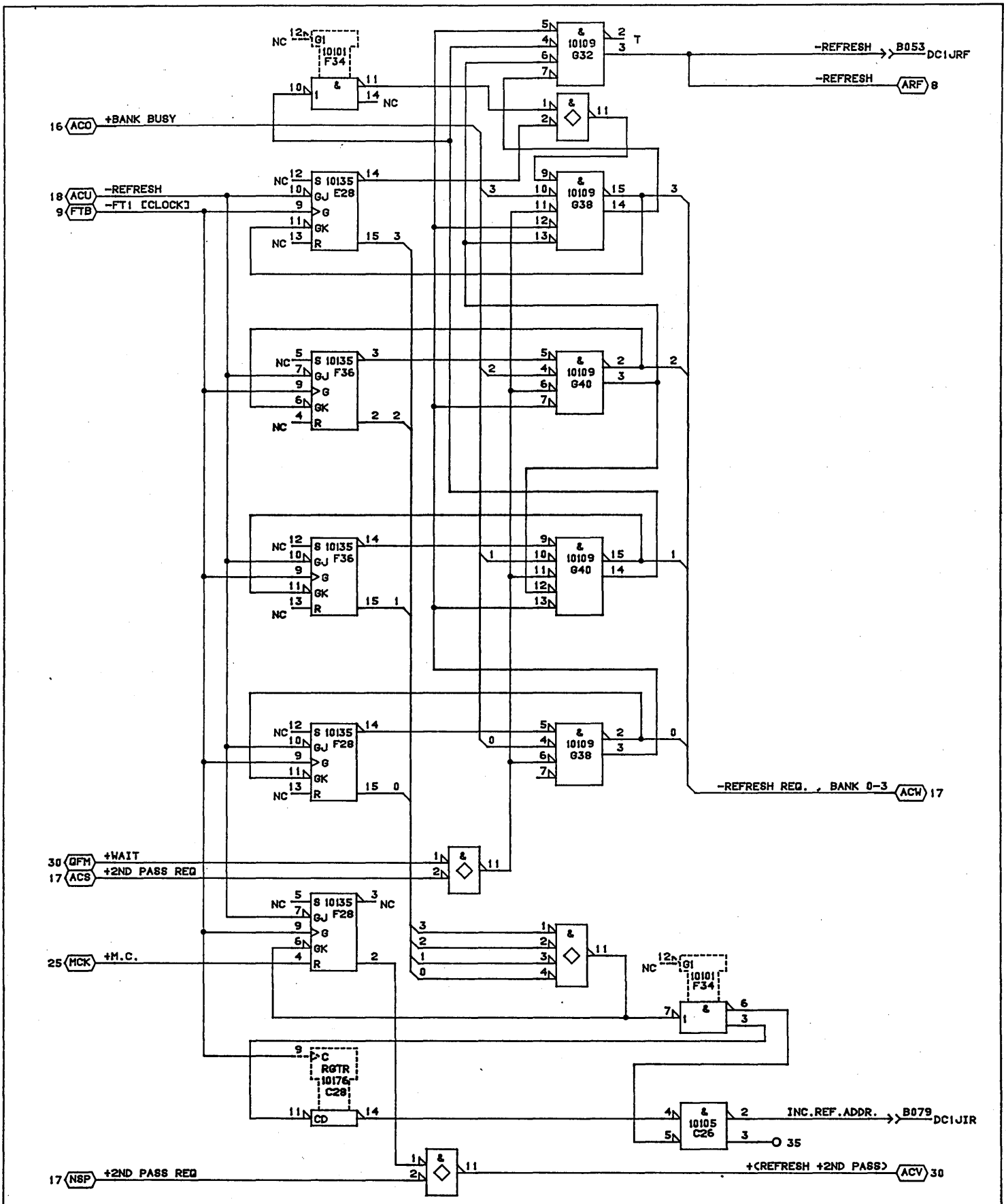

CONTROL DATA CANADA LTD	REFRESH MODULE ASSY:210 PAK TYPE: 1DC0	C		A
		25-APR-85	SHEET 19	

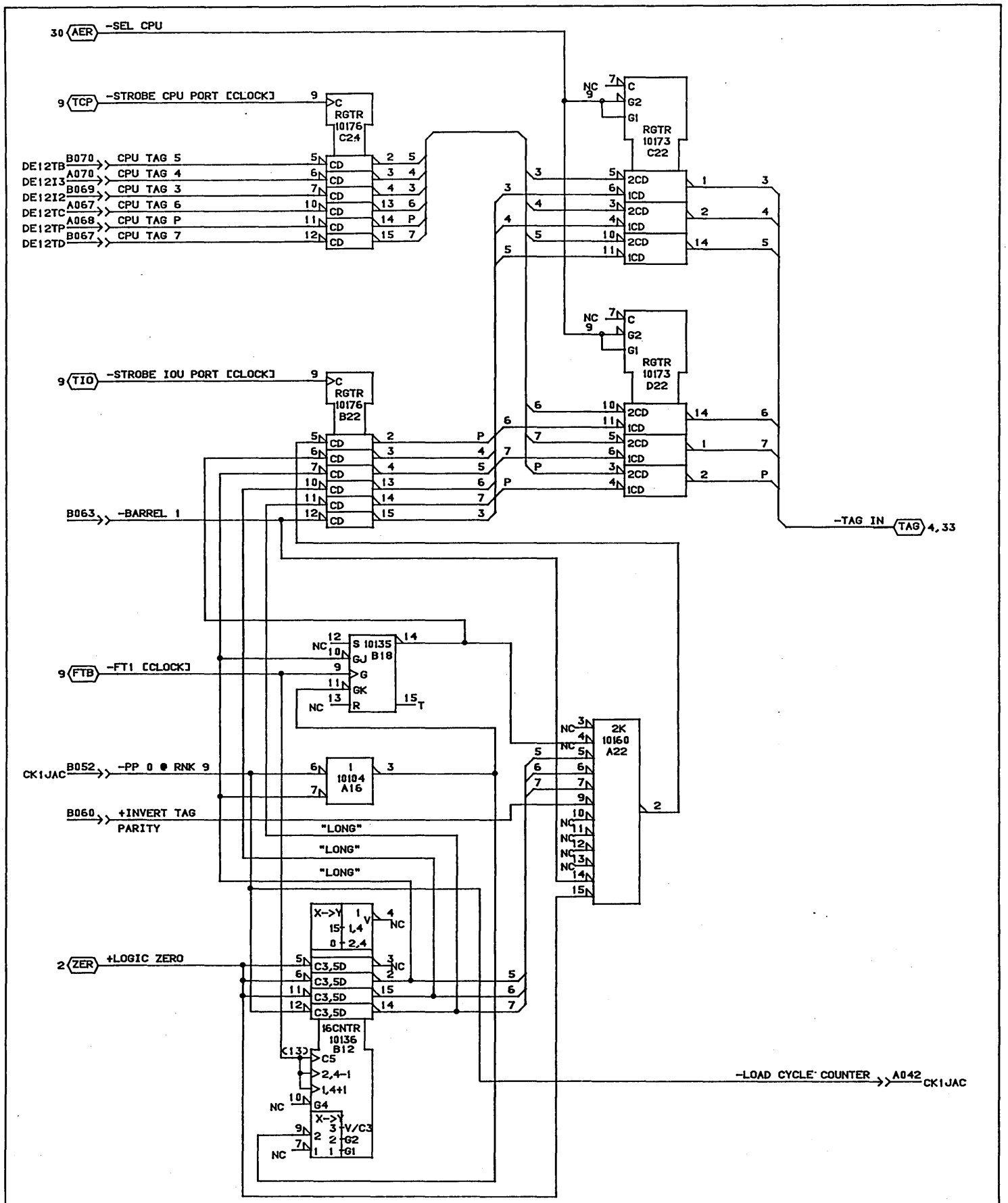

CONTROL DATA CANADA LTD	TAGS IN MODULE ASSEMBLY-210 PAK TYPE: 1DC0	C	--------	A
		25-APR-85	SHEET 20	

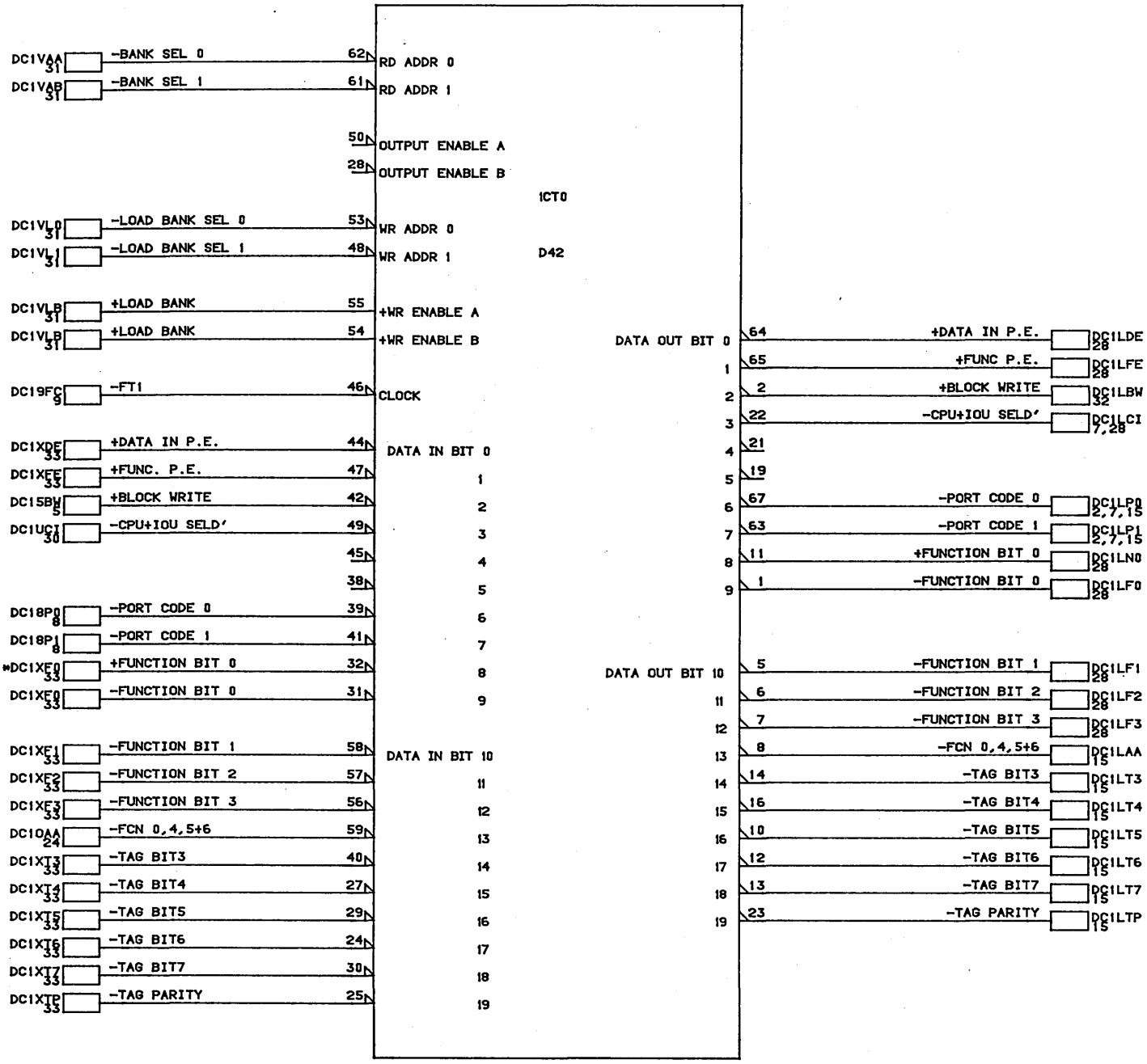

CONTROL DATA CANADA LTD	BANK LOGS FOR UEL1 AND TAGS TYPE: 1DC0	C		A
		26-APR-85	SHEET 21	

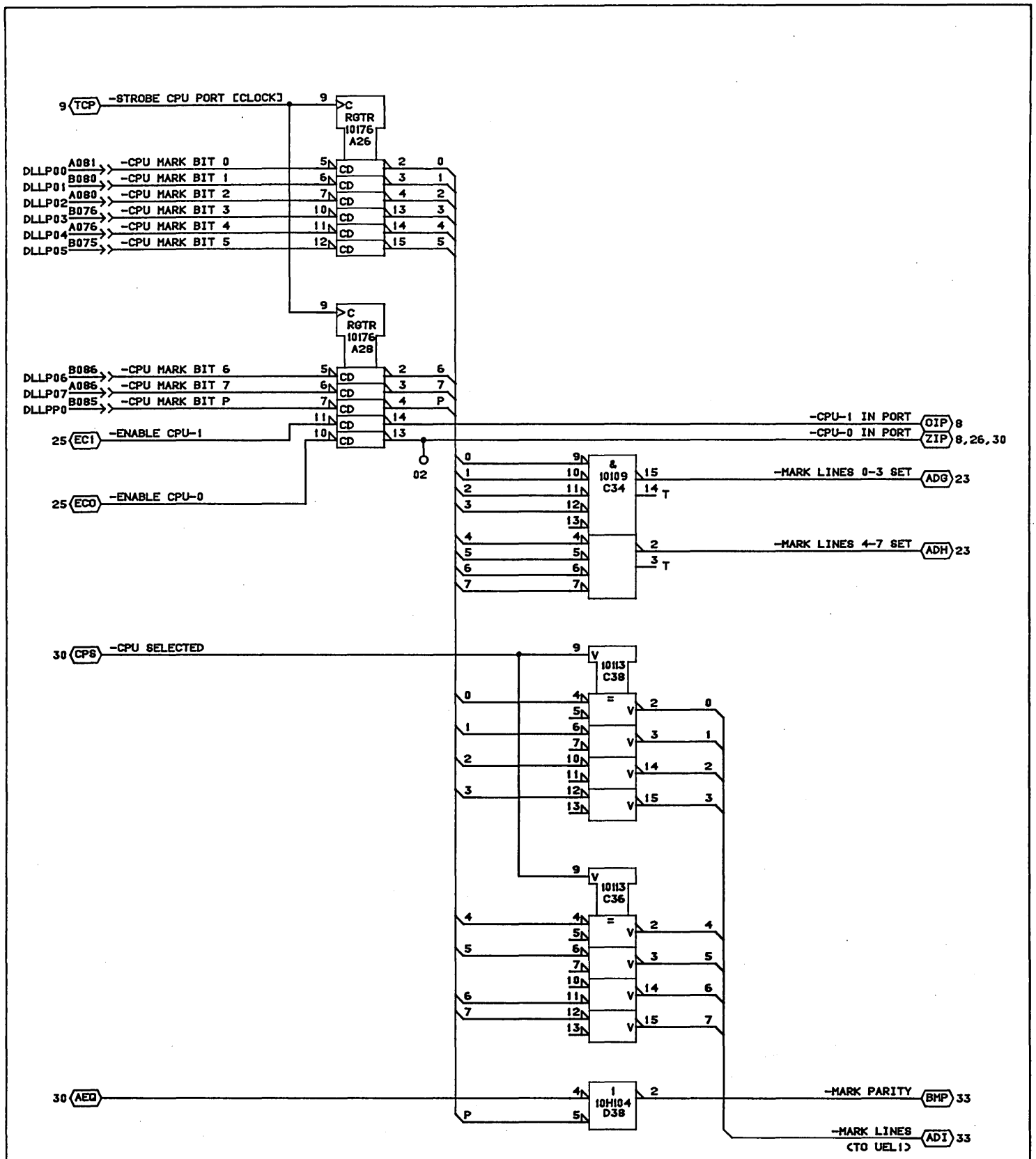

CONTROL DATA CANADA LTD	MARK LINES MODULE ASSY:210 PAK TYPE: 1DC0	C		A
		23-APR-85	SHEET 22	

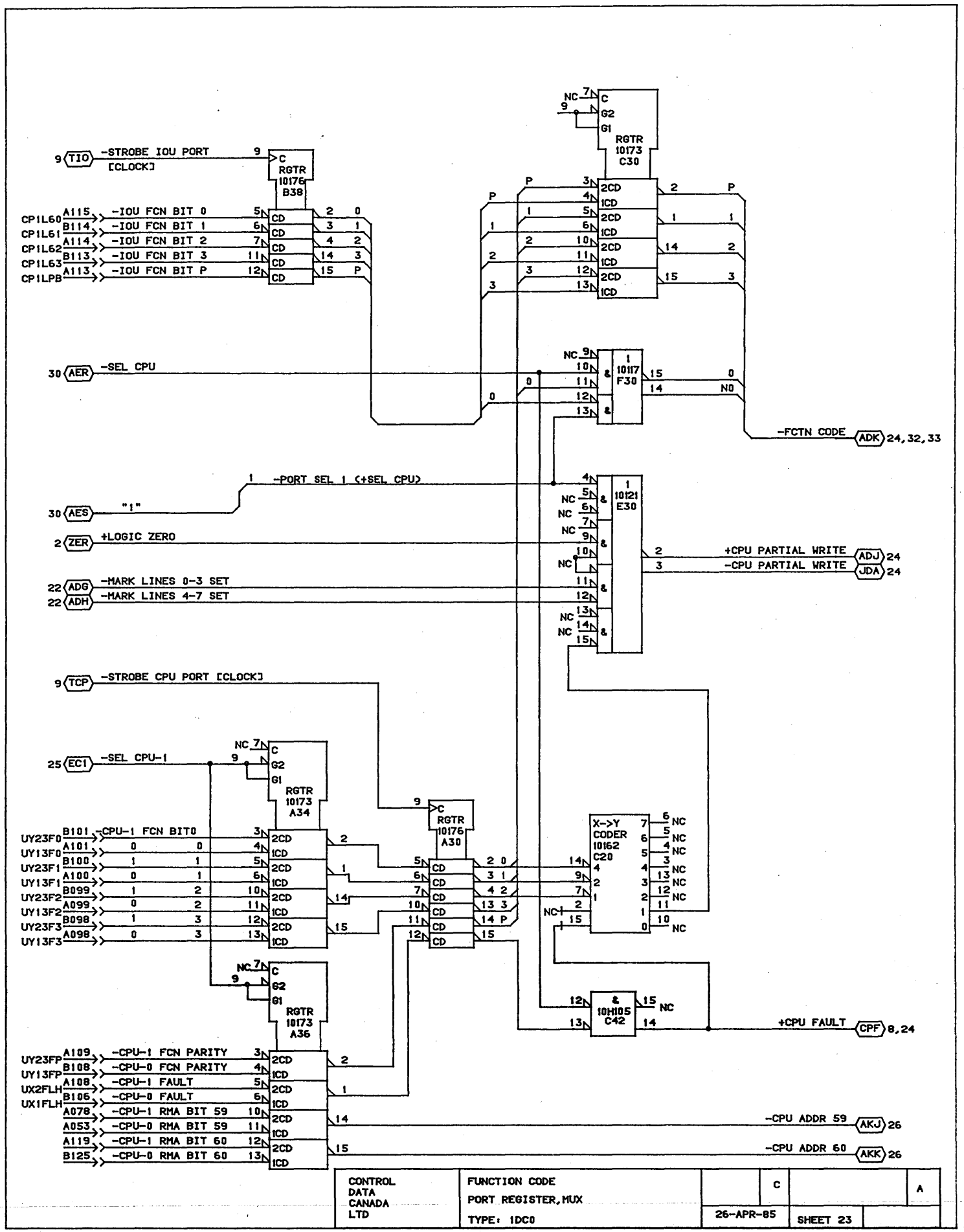
9 TIO -STROBE IOU PORT [CLOCK]
RGTR 10176 B38
CP1L60 A115 -IOU FCN BIT 0
CP1L61 B114 -IOU FCN BIT 1
CP1L62 A114 -IOU FCN BIT 2
CP1L63 B113 -IOU FCN BIT 3
CP1LPB A113 -IOU FCN BIT P
RGTR 10173 C30
30 AER -SEL CPU
10117 F30
-FCTN CODE ADK 24,32,33
-PORT SEL 1 (+SEL CPU)
30 AES "1"
10121 E30
2 ZER +LOGIC ZERO
+CPU PARTIAL WRITE ADJ 24
-CPU PARTIAL WRITE JDA 24
22 ADG -MARK LINES 0-3 SET
22 ADH -MARK LINES 4-7 SET
9 TCP -STROBE CPU PORT [CLOCK]
25 EC1 -SEL CPU-1
RGTR 10173 A34
RGTR 10176 A30
UY23F0 B101 -CPU-1 FCN BIT0
UY13F0 A101
UY23F1 B100
UY13F1 A100
UY23F2 B099
UY13F2 A099
UY23F3 B098
UY13F3 A098
X->Y CODER 10162 C20
RGTR 10173 A36
10H105 C42
+CPU FAULT CPF 8,24
UY23FP A109 -CPU-1 FCN PARITY
UY13FP B108 -CPU-0 FCN PARITY
UX2FLH A108 -CPU-1 FAULT
UX1FLH B106 -CPU-0 FAULT
A078 -CPU-1 RMA BIT 59
A053 -CPU-0 RMA BIT 59
A119 -CPU-1 RMA BIT 60
B125 -CPU-0 RMA BIT 60
-CPU ADDR 59 AKJ 26
-CPU ADDR 60 AKK 26
CONTROL DATA CANADA LTD
FUNCTION CODE
PORT REGISTER, MUX
TYPE: 1DC0
C
A
26-APR-85
SHEET 23

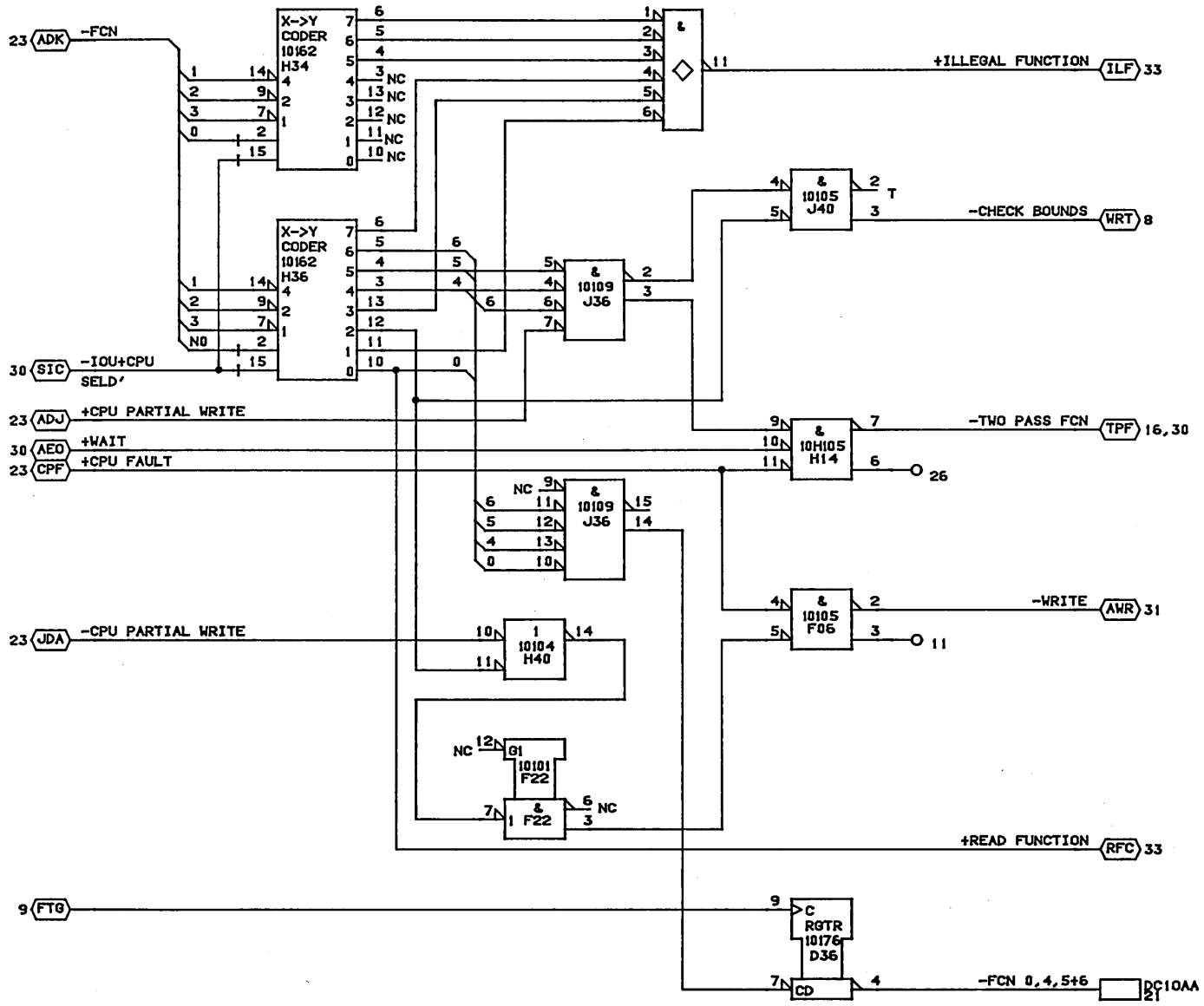

CONTROL DATA CANADA LTD	FUNCTION DECODE TYPE: 1DC0	C		A
		24-APR-85	SHEET 24	

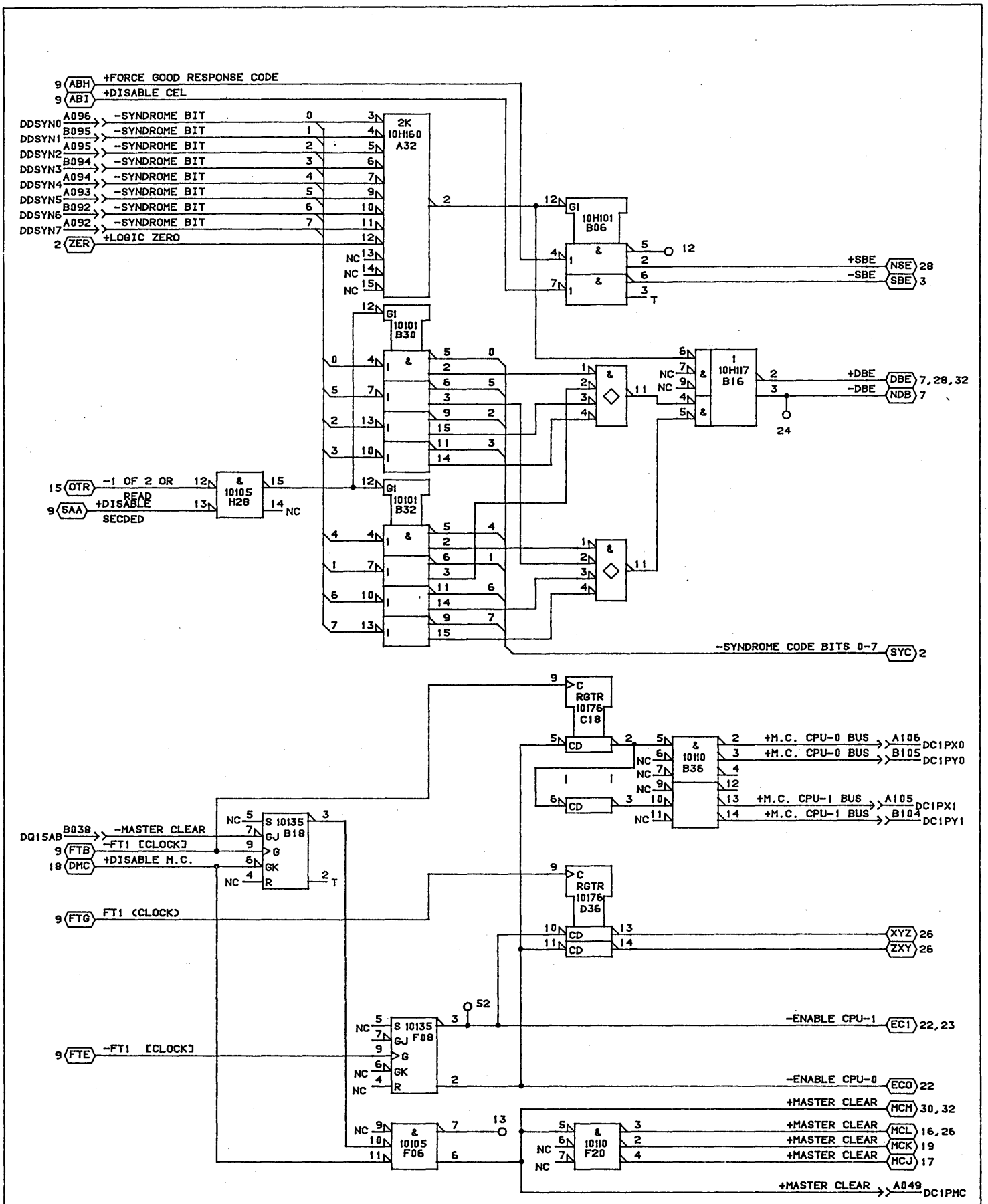

CONTROL DATA CANADA LTD	SYNDROME CHECK AND CPU SELECT MASTER CLEAR MODULE ASSY:210 PAK TYPE:1DC0	C		B
		05-MAR-86	SHEET 25	

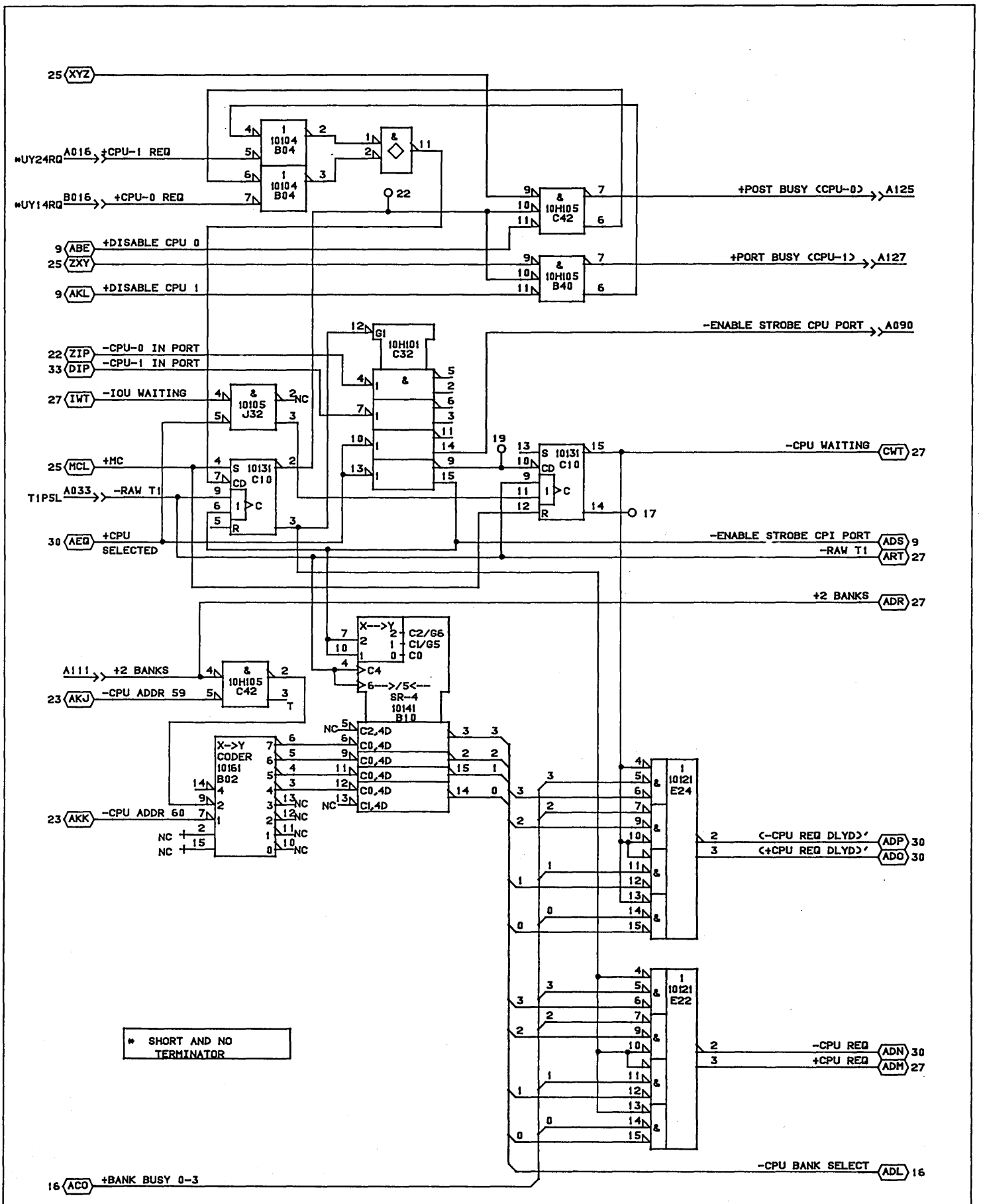

CONTROL DATA CANADA LTD	CPU REQUEST MODULE ASSY:210 PAK TYPE: 1DC0	C		A
		24-APR-85	SHEET 26	

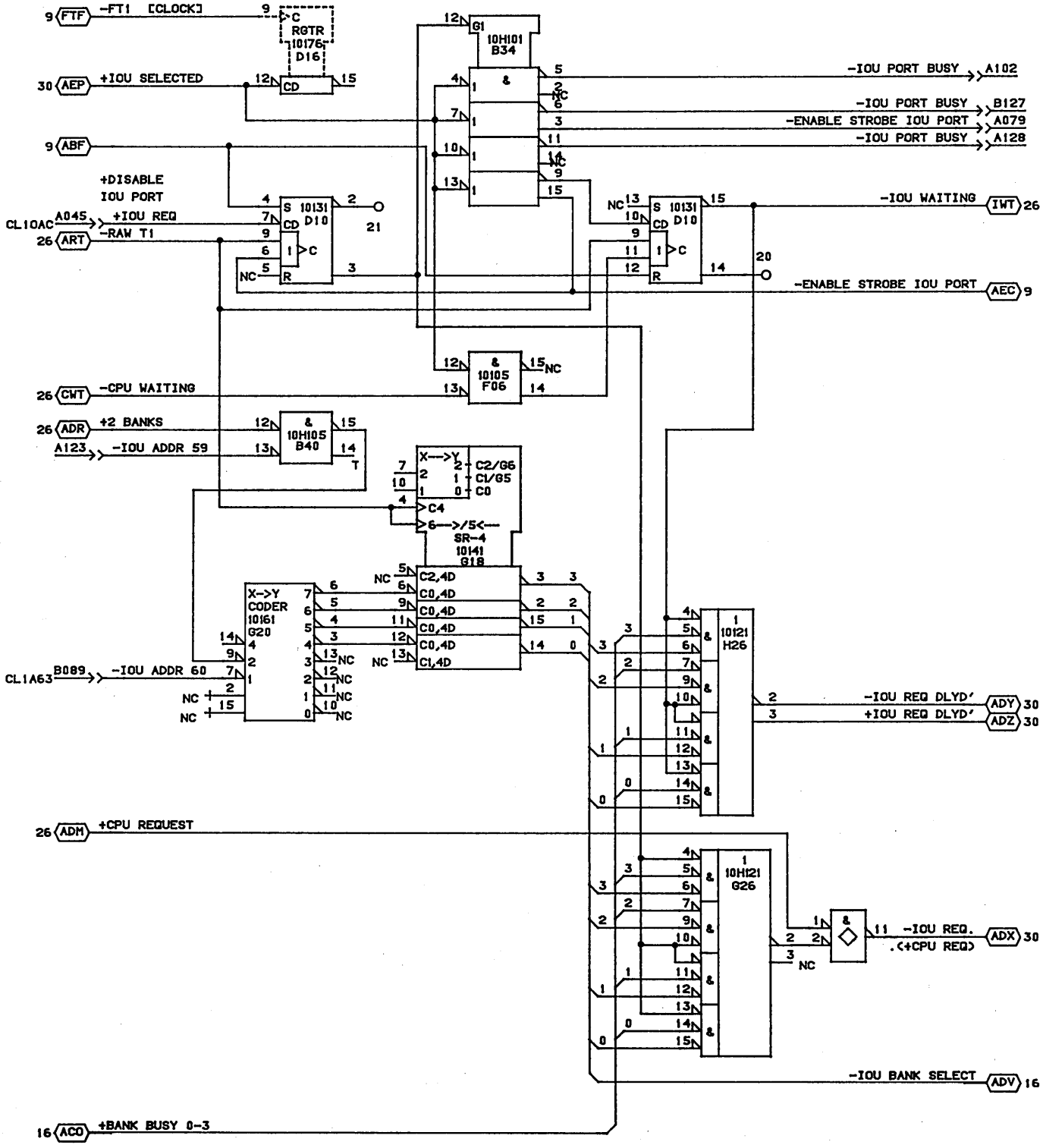

CONTROL DATA CANADA LTD	IOU REQUEST TYPE: 1DC0	C		A
		23-APR-85	SHEET 27	

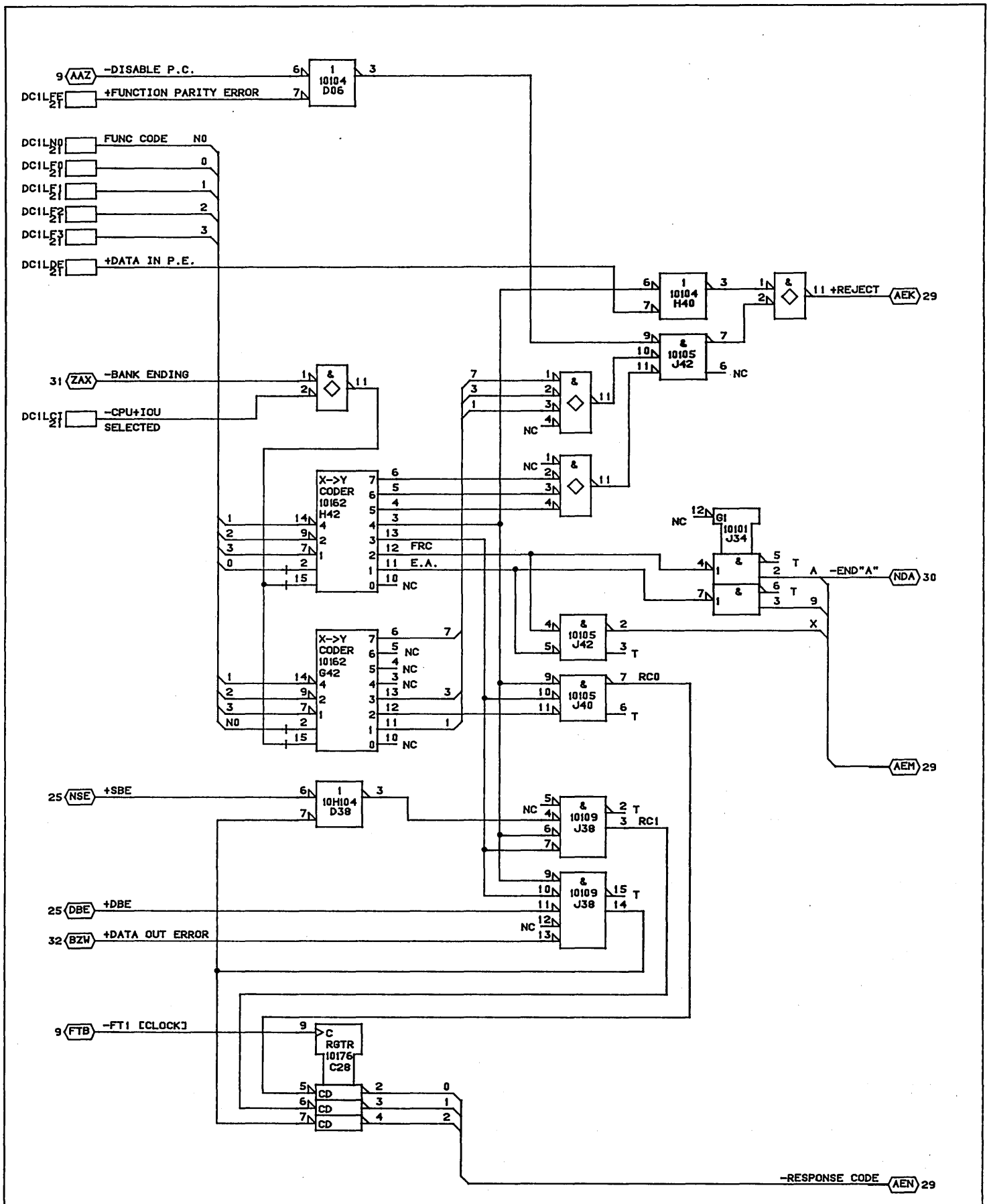

CONTROL DATA CANADA LTD	RESPONSE CODE	C		A
	TYPE: 1DC0	23-APR-85	SHEET 28	

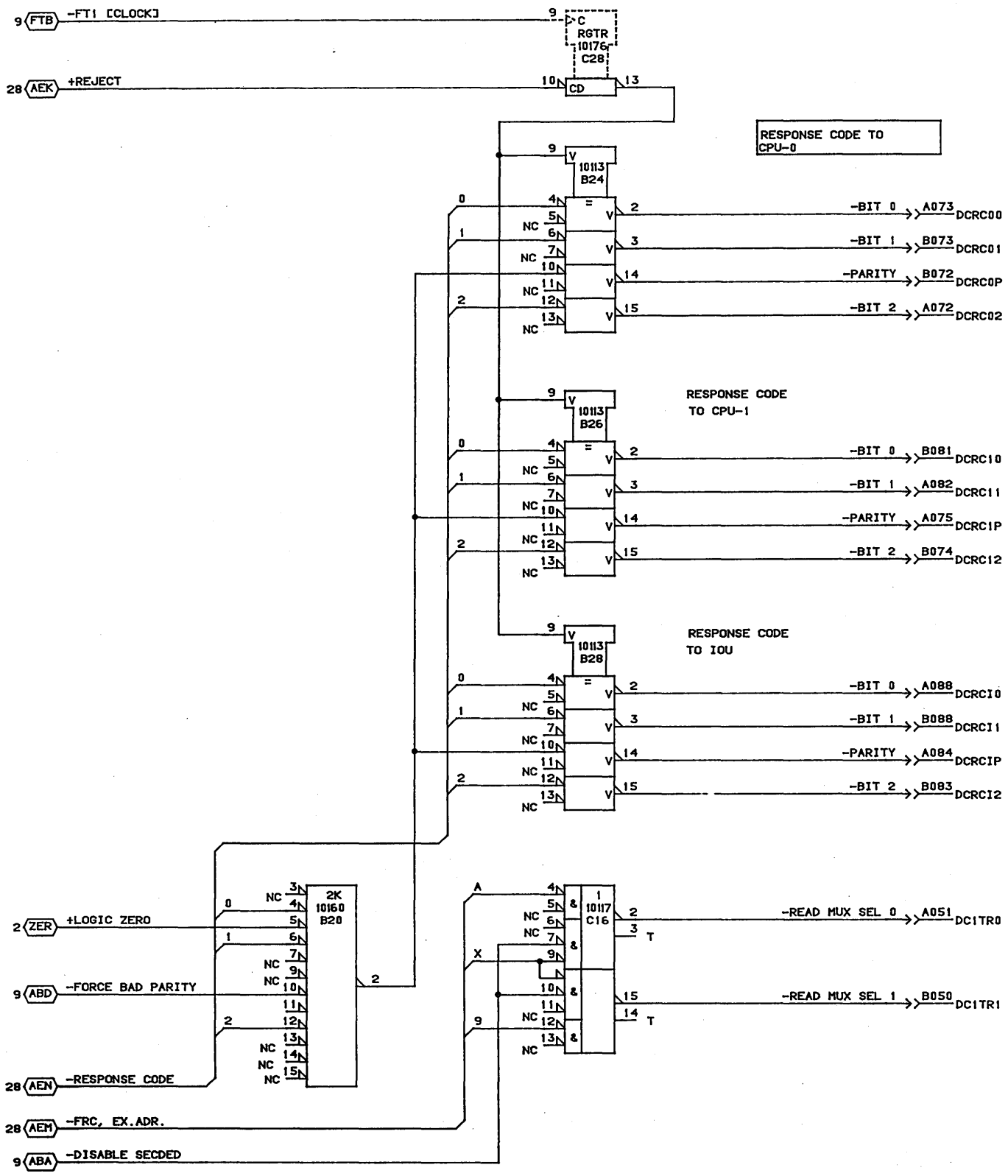

CONTROL DATA CANADA LTD	RESPONSE CODE READ MUX SELECTS TYPE:1DC0	C		A
		25-APR-85	SHEET 29	

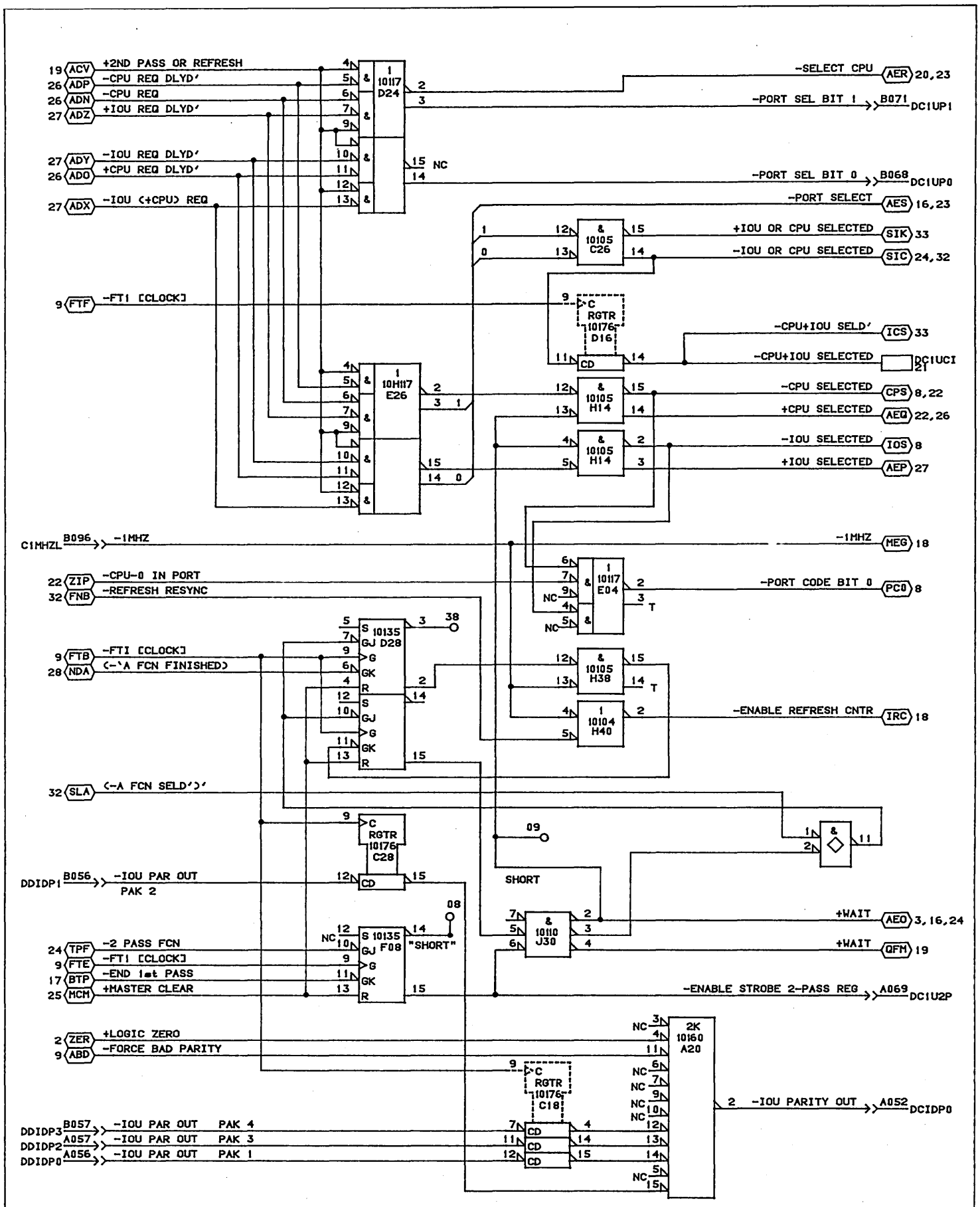
19 ACV +2ND PASS OR REFRESH
26 ADP -CPU REQ DLYD'
26 ADN -CPU REQ
27 ADZ +IOU REQ DLYD'
27 ADY -IOU REQ DLYD'
26 ADO +CPU REQ DLYD'
27 ADX -IOU (+CPU) REQ
9 FTF -FT1 [CLOCK]
1 10117 D24
NC
-SELECT CPU AER 20,23
-PORT SEL BIT 1 B071 DC1UP1
-PORT SEL BIT 0 B068 DC1UP0
-PORT SELECT AES 16,23
1 10H117 E26
& 10105 C26
+IOU OR CPU SELECTED SIK 33
-IOU OR CPU SELECTED SIC 24,32
RGTR 10176 D16
-CPU+IOU SELD' ICS 33
-CPU+IOU SELECTED DC1UCI 21
& 10105 H14
-CPU SELECTED CPS 8,22
+CPU SELECTED AEQ 22,26
-IOU SELECTED IOS 8
+IOU SELECTED AEP 27
C1MHZL B096 -1MHZ
-1MHZ MEG 18
22 ZIP -CPU-0 IN PORT
32 FNB -REFRESH RESYNC
1 10117 E04
-PORT CODE BIT 0 PC0 8
9 FTB -FT1 [CLOCK]
28 NDA (-'A FCN FINISHED)
S 10135 GJ D28
38
& 10105 H38
1 10104 H40
-ENABLE REFRESH CNTR IRC 18
32 SLA (-A FCN SELD')'
RGTR 10176 C28
DDIDP1 B056 -IOU PAR OUT PAK 2
09
SHORT
08
S 10135 F08 "SHORT"
24 TPF -2 PASS FCN
9 FTE -FT1 [CLOCK]
17 BTP -END 1st PASS
25 MCM +MASTER CLEAR
& 10110 J30
+WAIT AEO 3,16,24
+WAIT QFM 19
-ENABLE STROBE 2-PASS REG A069 DC1U2P
2 ZER +LOGIC ZERO
9 ABD -FORCE BAD PARITY
2K 10160 A20
RGTR 10176 C18
2 -IOU PARITY OUT A052 DC1DP0
DDIDP3 B057 -IOU PAR OUT PAK 4
DDIDP2 A057 -IOU PAR OUT PAK 3
DDIDP0 A056 -IOU PAR OUT PAK 1
CONTROL DATA CANADA LTD
PRIORITY
FRC OR 2-PASS WAIT
TYPE:1DC0
C
A
23-APR-85
SHEET 30

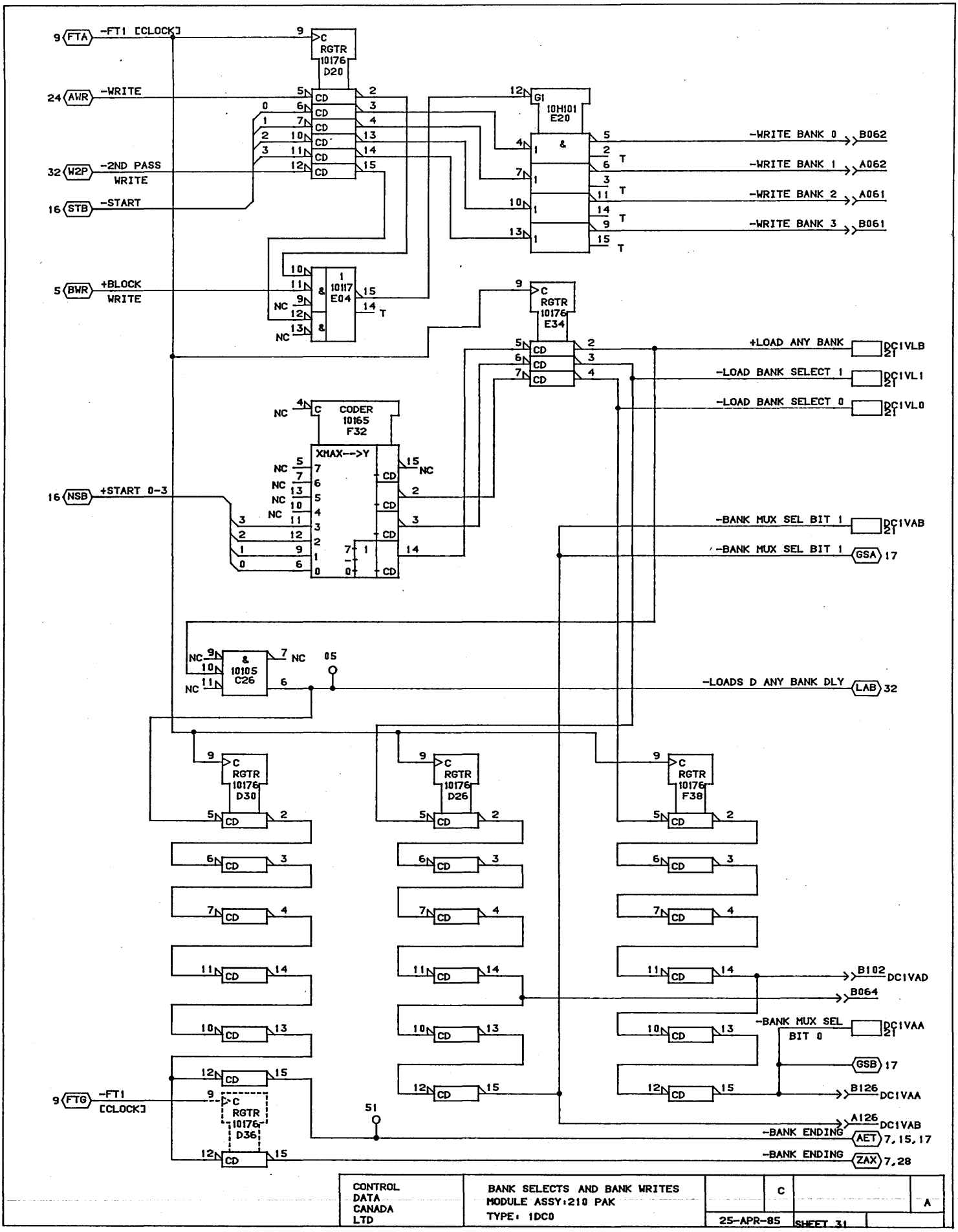

CONTROL DATA CANADA LTD	BANK SELECTS AND BANK WRITES MODULE ASSY:210 PAK TYPE: 1DC0	C		A
		25-APR-85	SHEET 31	

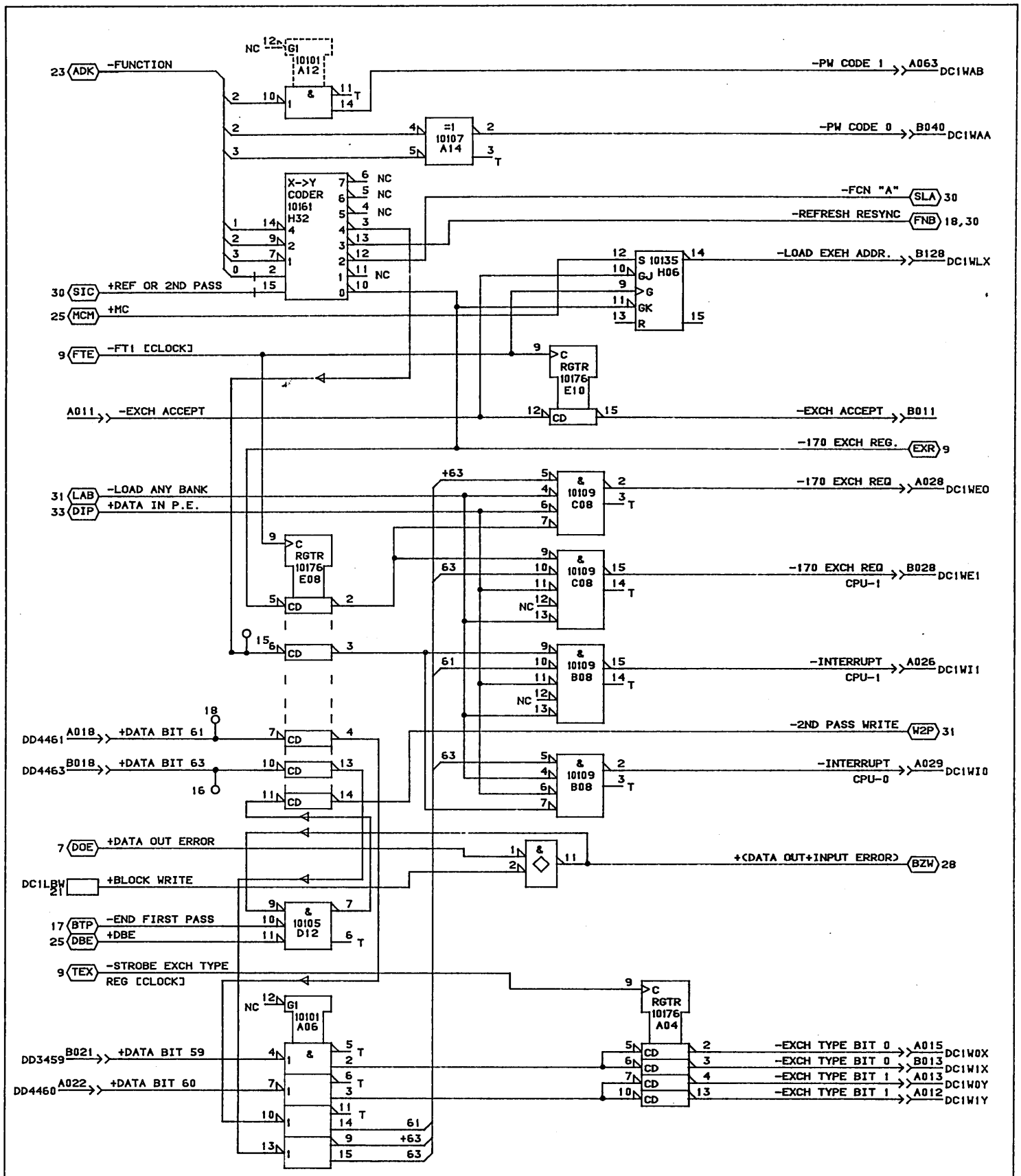

CONTROL DATA CANADA LTD	170 EXCHANGE REQ. 180 INTERRUPT TYPE:1DC0	C	----------	B
		06-MAR-86	SHEET 32	

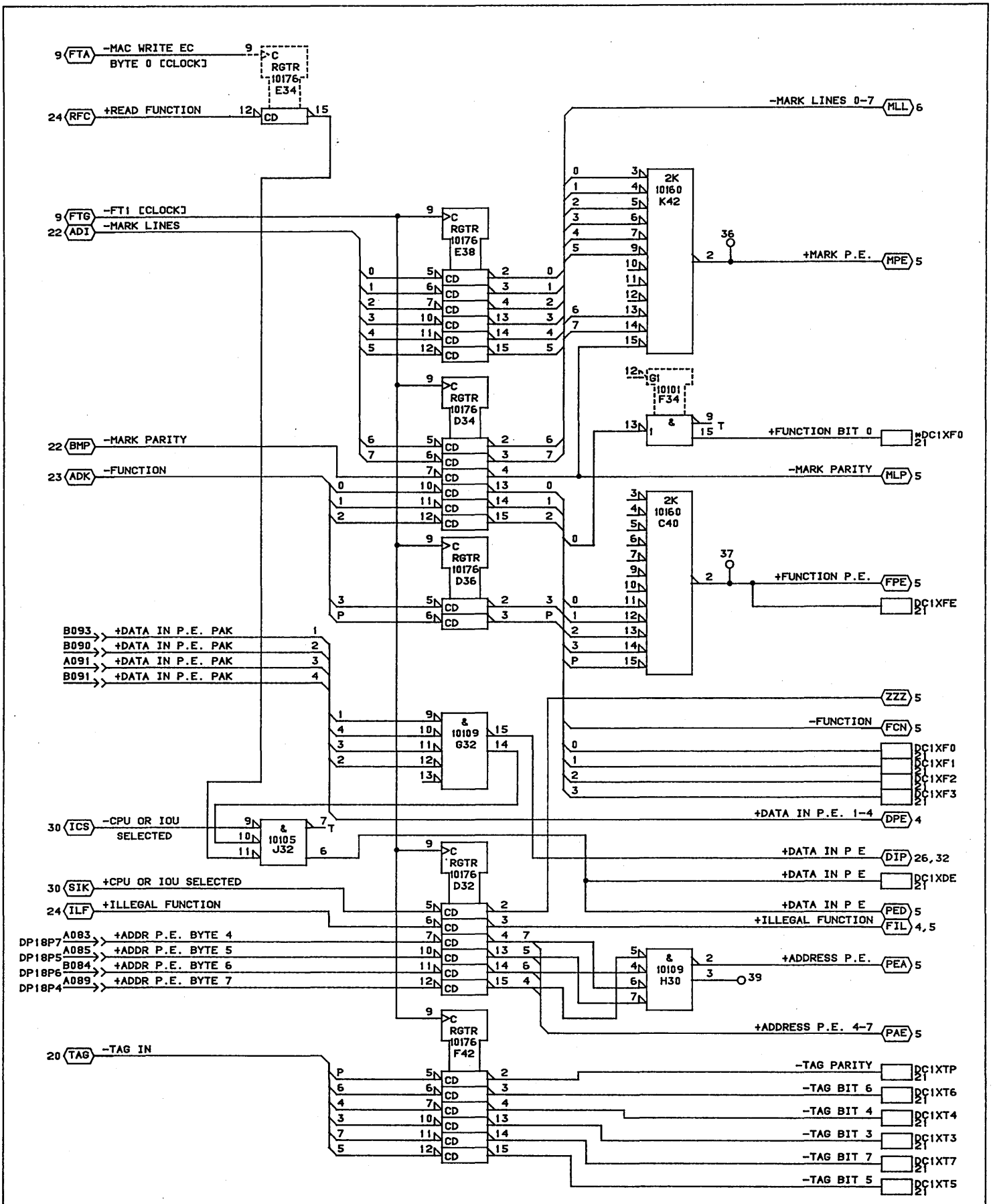

CONTROL DATA CANADA LTD	DELAY FOR INPUT ERROR CHECKING MODULE ASSY:210 PAK TYPE: 1DC0	C		B
		06-MAR-86	SHEET 33	

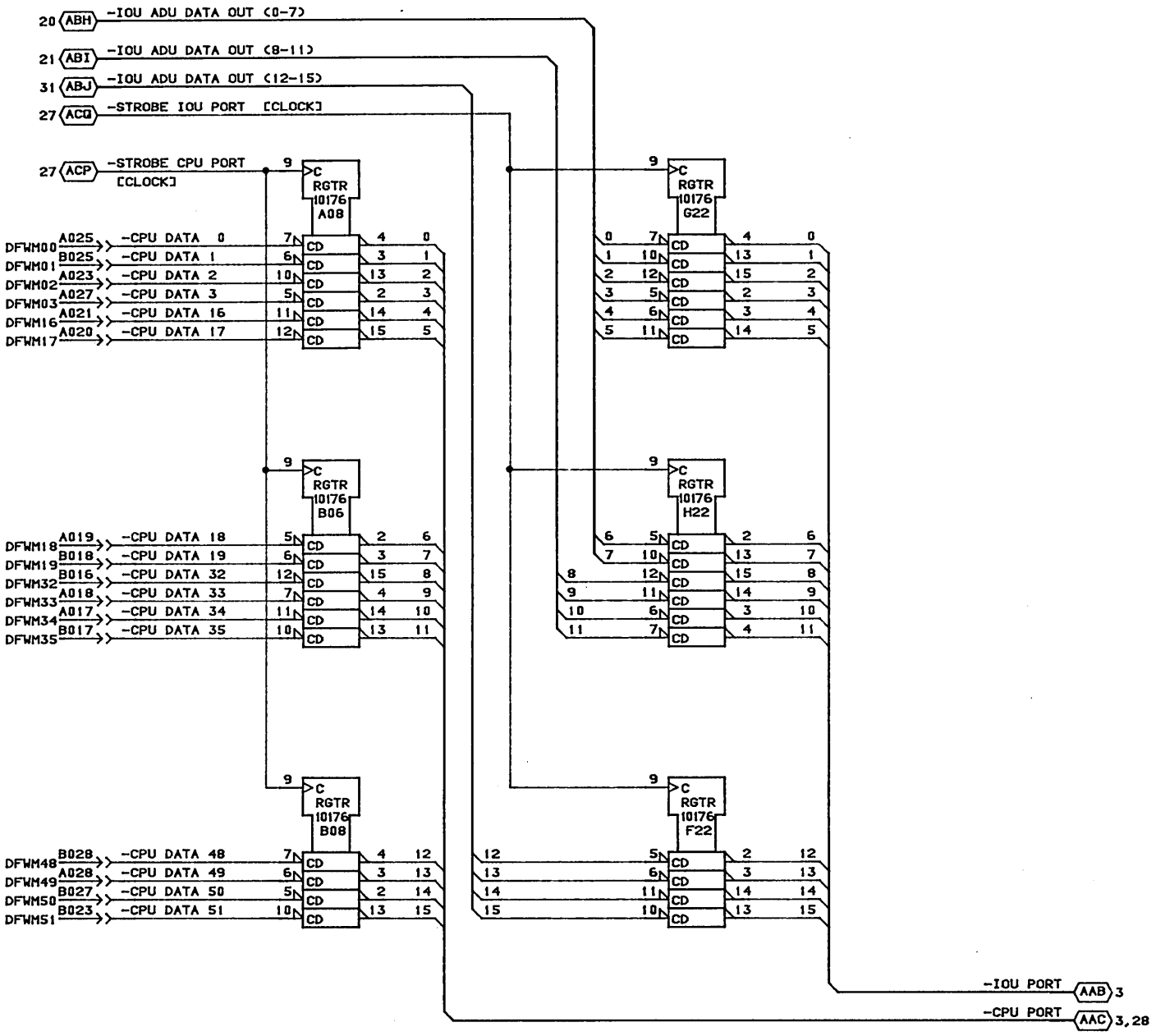

CONTROL DATA CANADA LTD	PORT REGISTERS MODULE ASSY:210 PAK TYPE: 1DD0	C		B
		27-MAR-85	SHEET 02	

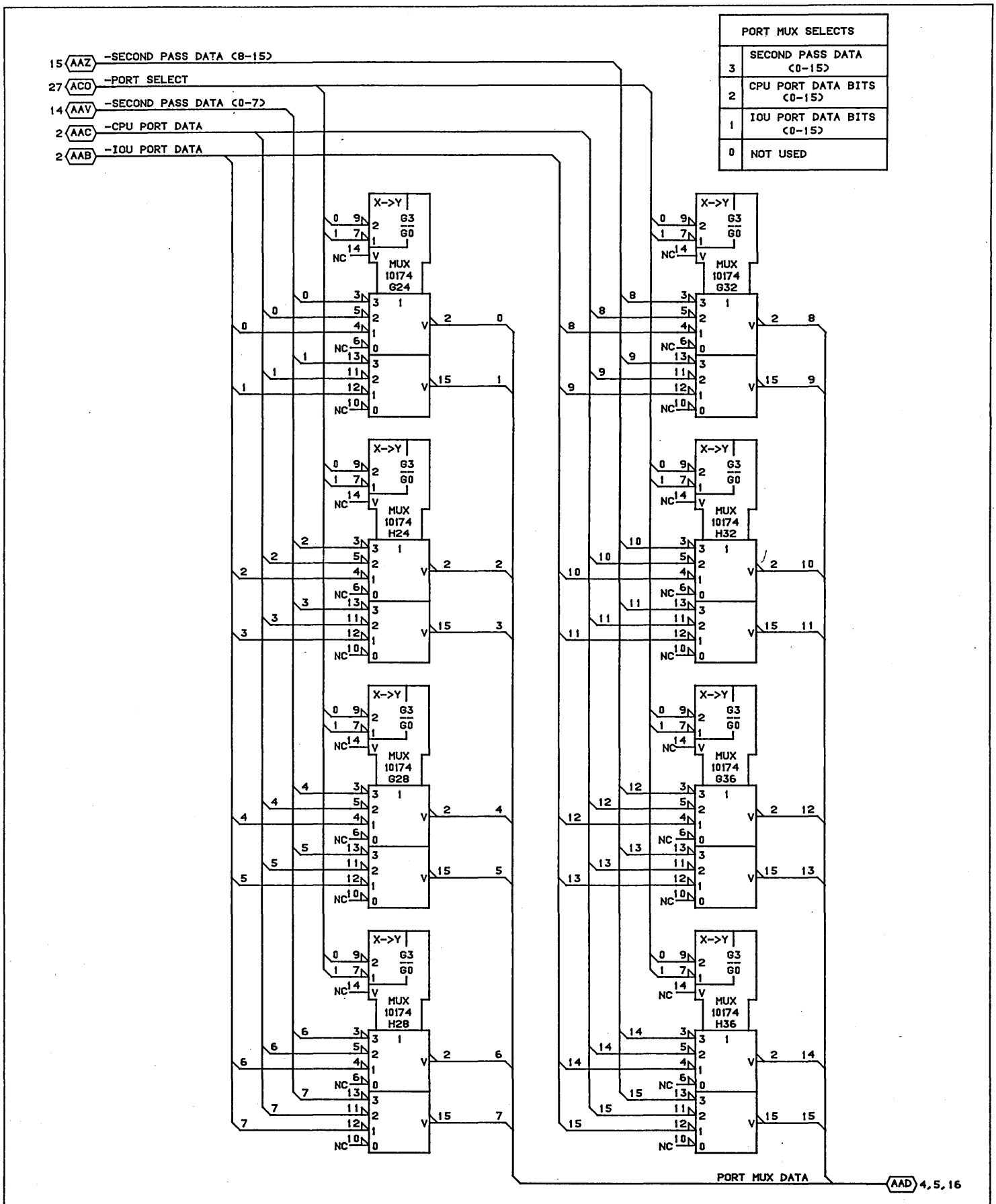

CONTROL DATA CANADA LTD	PORT MUX TYPE: 1DD0	C		B
		27-MAR-85	SHEET 03	

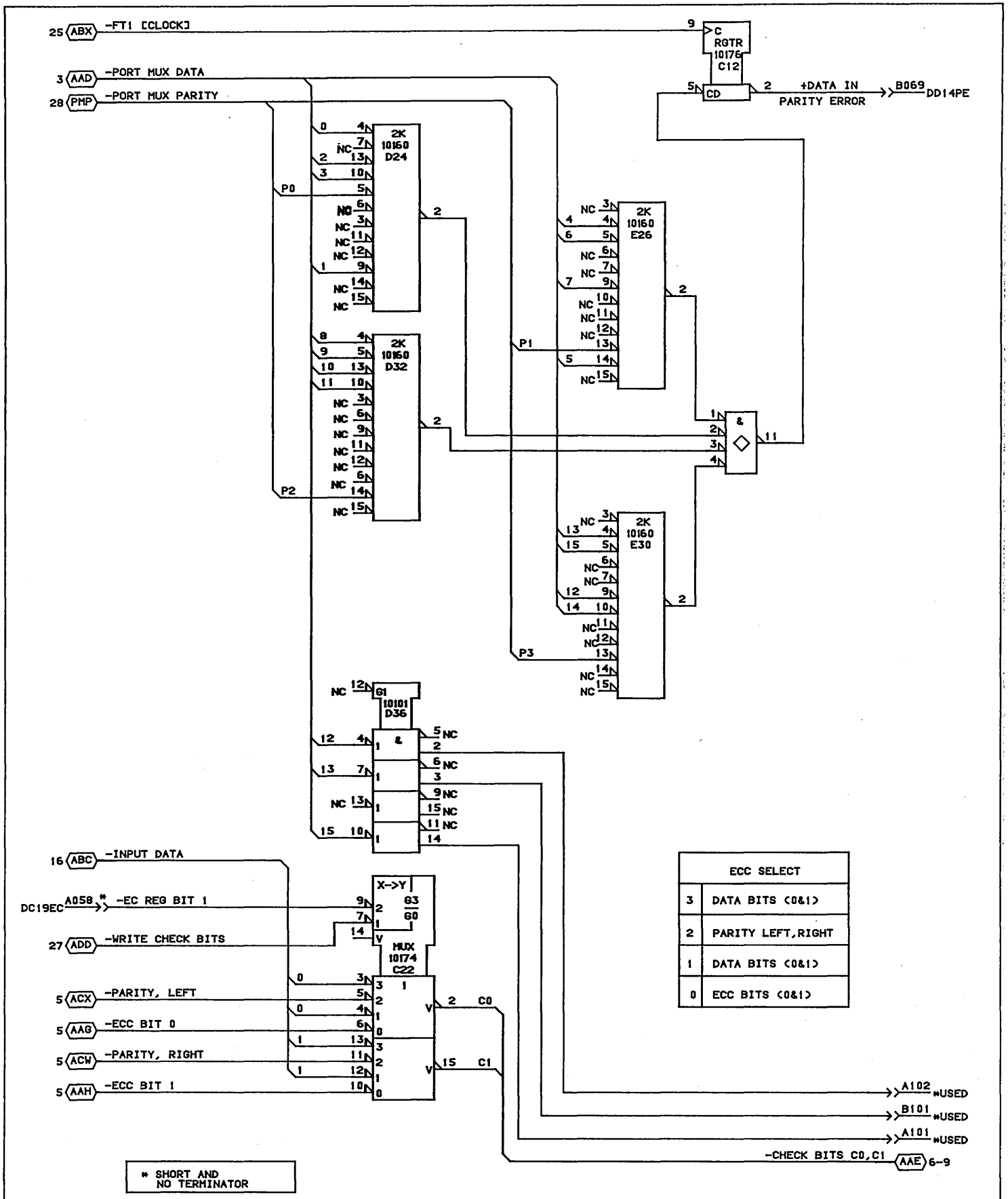

ECC SELECT	
3	DATA BITS (0&1)
2	PARITY LEFT,RIGHT
1	DATA BITS (0&1)
0	ECC BITS (0&1)

CONTROL DATA CANADA LTD	PORT MUX FANOUT 1 LEVEL PARITY CHECK CHECK BIT SELECT TYPE: 1DD0		C	B
		27-MAR-85	SHEET 04	

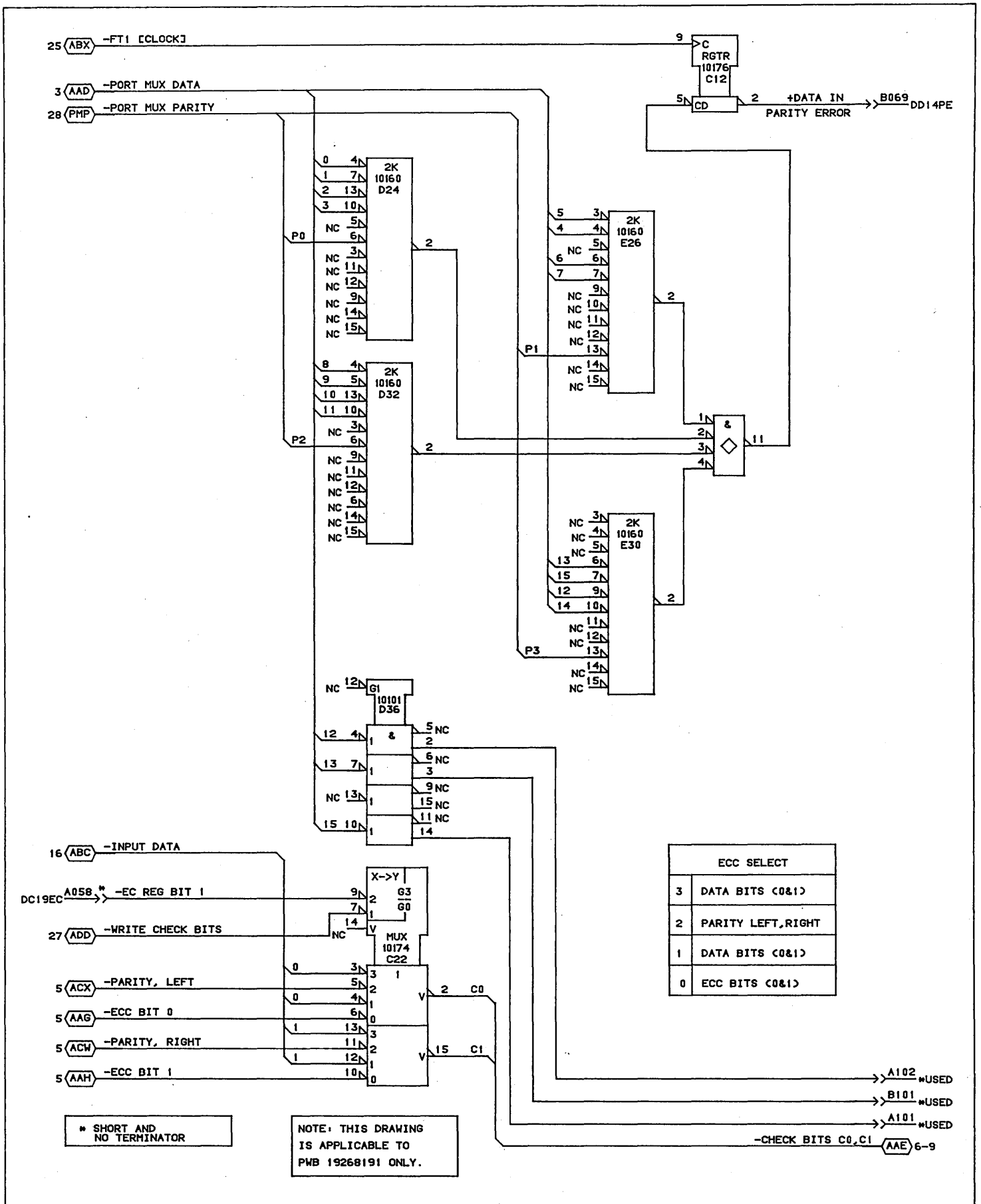

ECC SELECT	
3	DATA BITS (0&1)
2	PARITY LEFT,RIGHT
1	DATA BITS (0&1)
0	ECC BITS (0&1)

CONTROL DATA CANADA LTD	PORT MUX FANOUT 1 LEVEL PARITY CHECK CHECK BIT SELECT TYPE: 1DD0	C		B
		27-MAR-85	SHEET 04A	

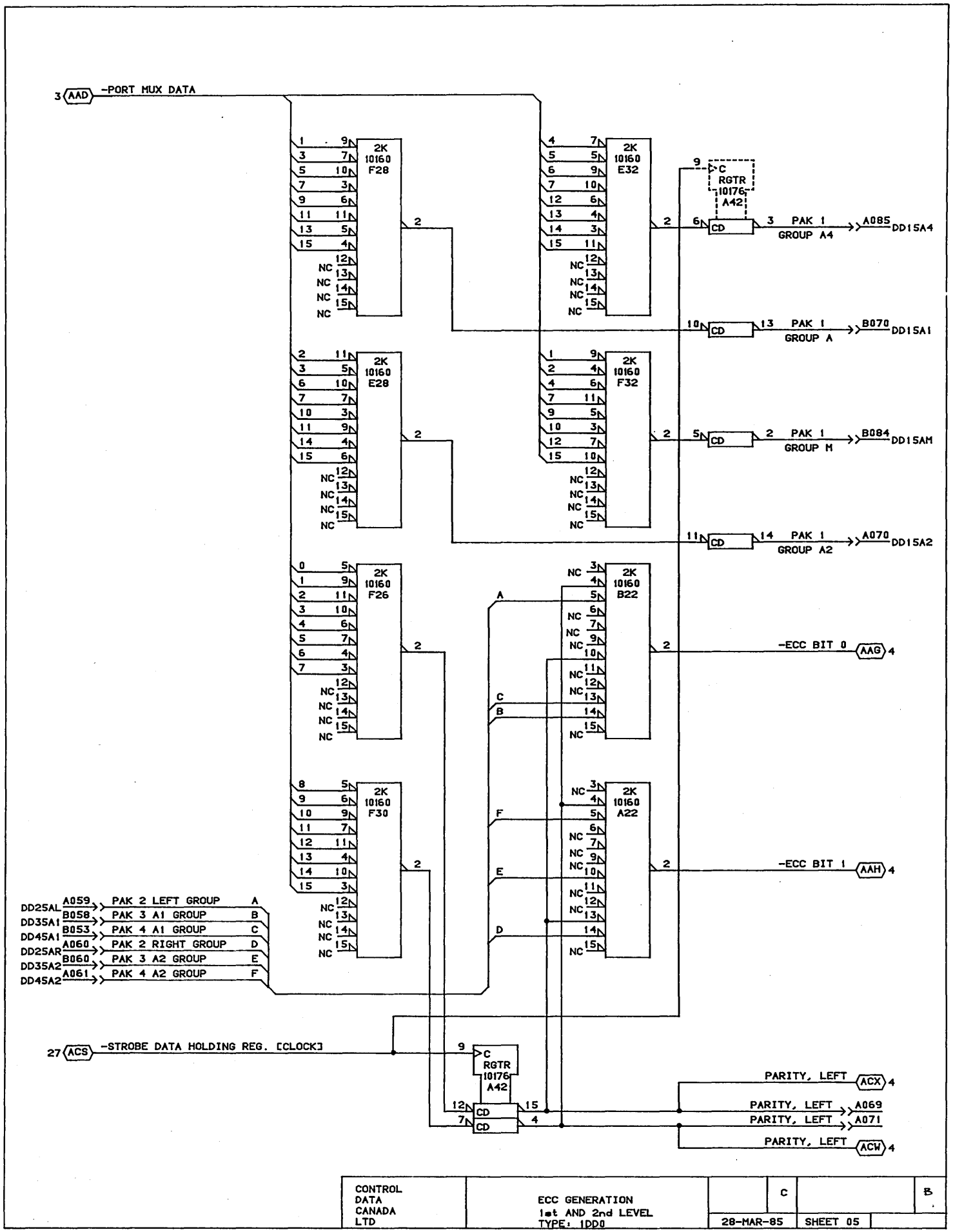

CONTROL DATA CANADA LTD	ECC GENERATION 1st AND 2nd LEVEL TYPE: 1DD0	C		B
		28-MAR-85	SHEET 05	

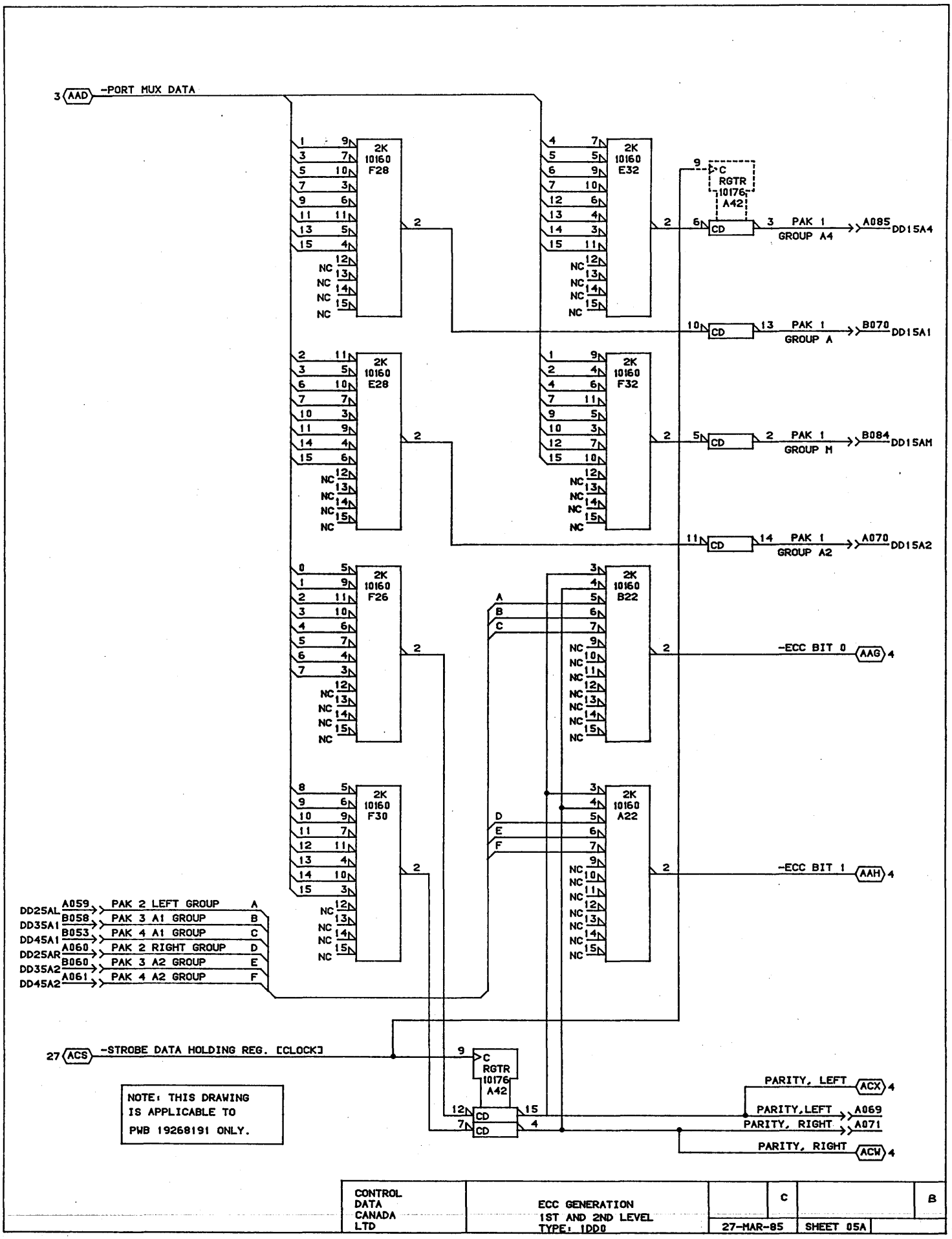

CONTROL DATA CANADA LTD	ECC GENERATION 1ST AND 2ND LEVEL TYPE: 1DD0	C		B
		27-MAR-85	SHEET 05A	

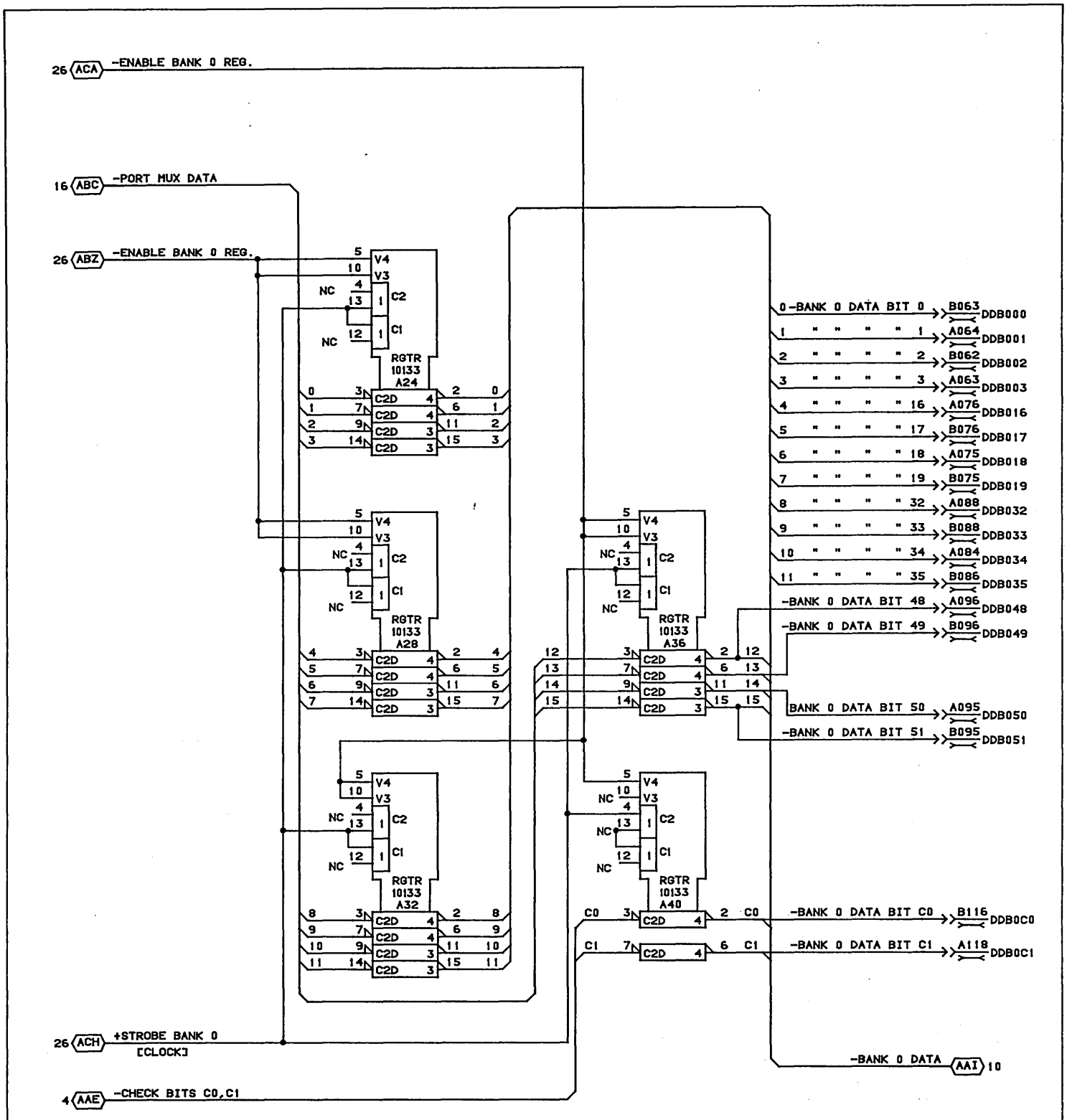

CONTROL DATA CANADA LTD	DATA REGISTER BI-DIRECTIONAL BUS BANK 0 MODULE ASSY:210 PAK TYPE: 1DD0	C		B
		27-MAR-85	SHEET 06	INST 01

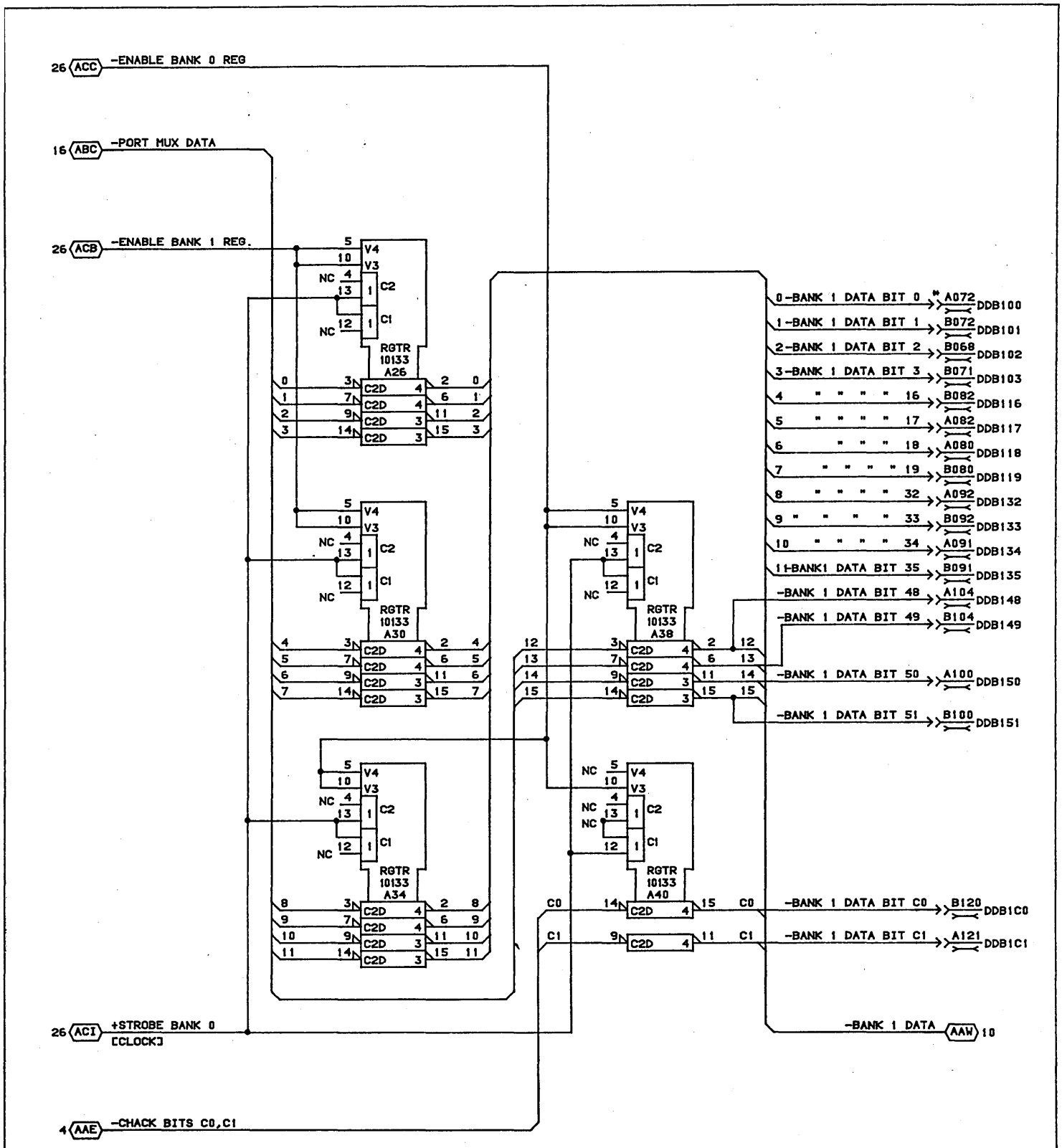

CONTROL DATA CANADA LTD	DATA REGISTER BI-DIRECTIONAL BUS BANK 1 TYPE: 1DD0	C		B
		27-MAR-85	SHEET 07	INST 01

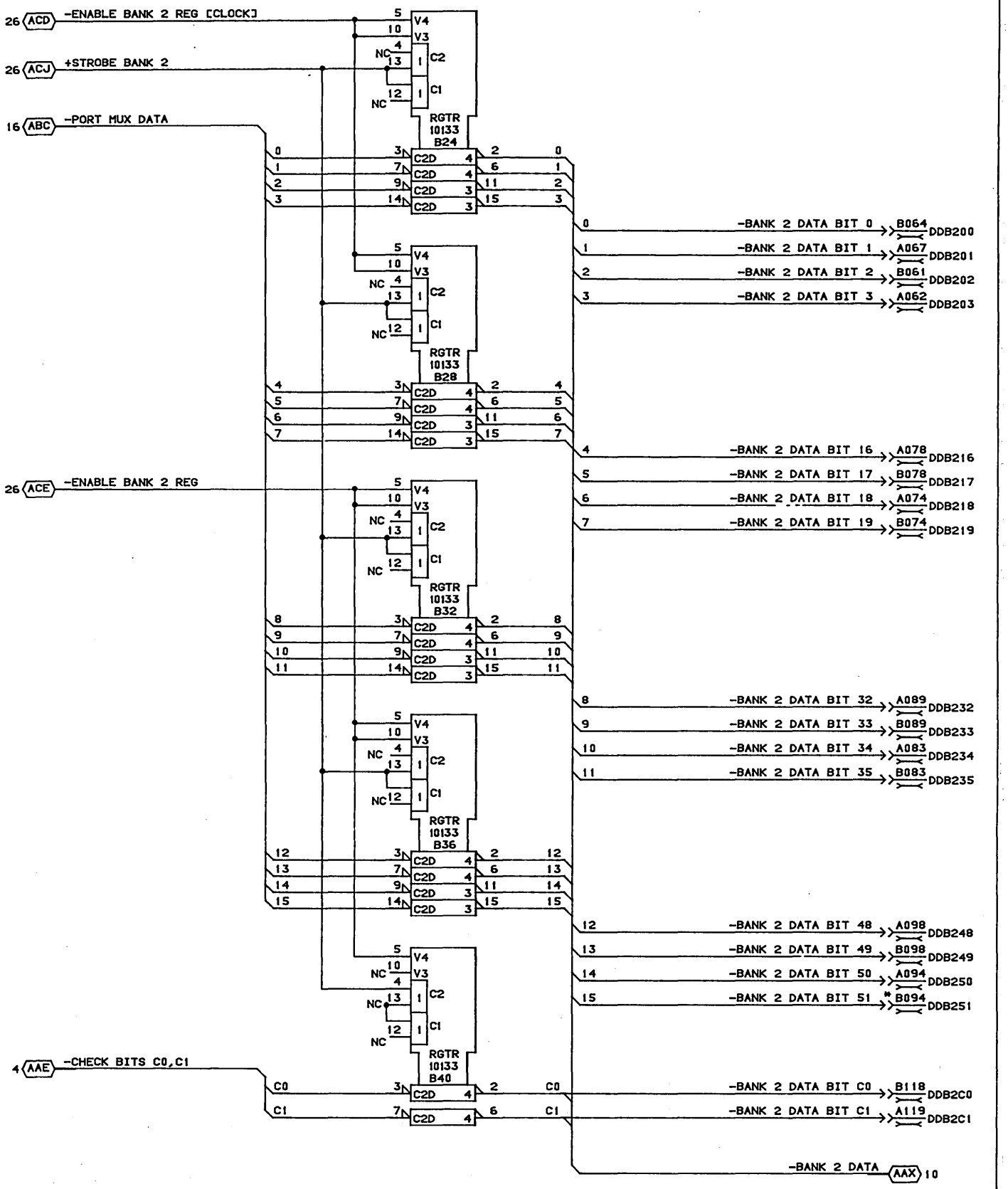

CONTROL DATA CANADA LTD	DATA REGISTER BANK 2 BI-DIRECTIONAL BUS MODULE ASSY:210 PAK TYPE: 1DD0	C		B
		27-MAR-85	SHEET 08	

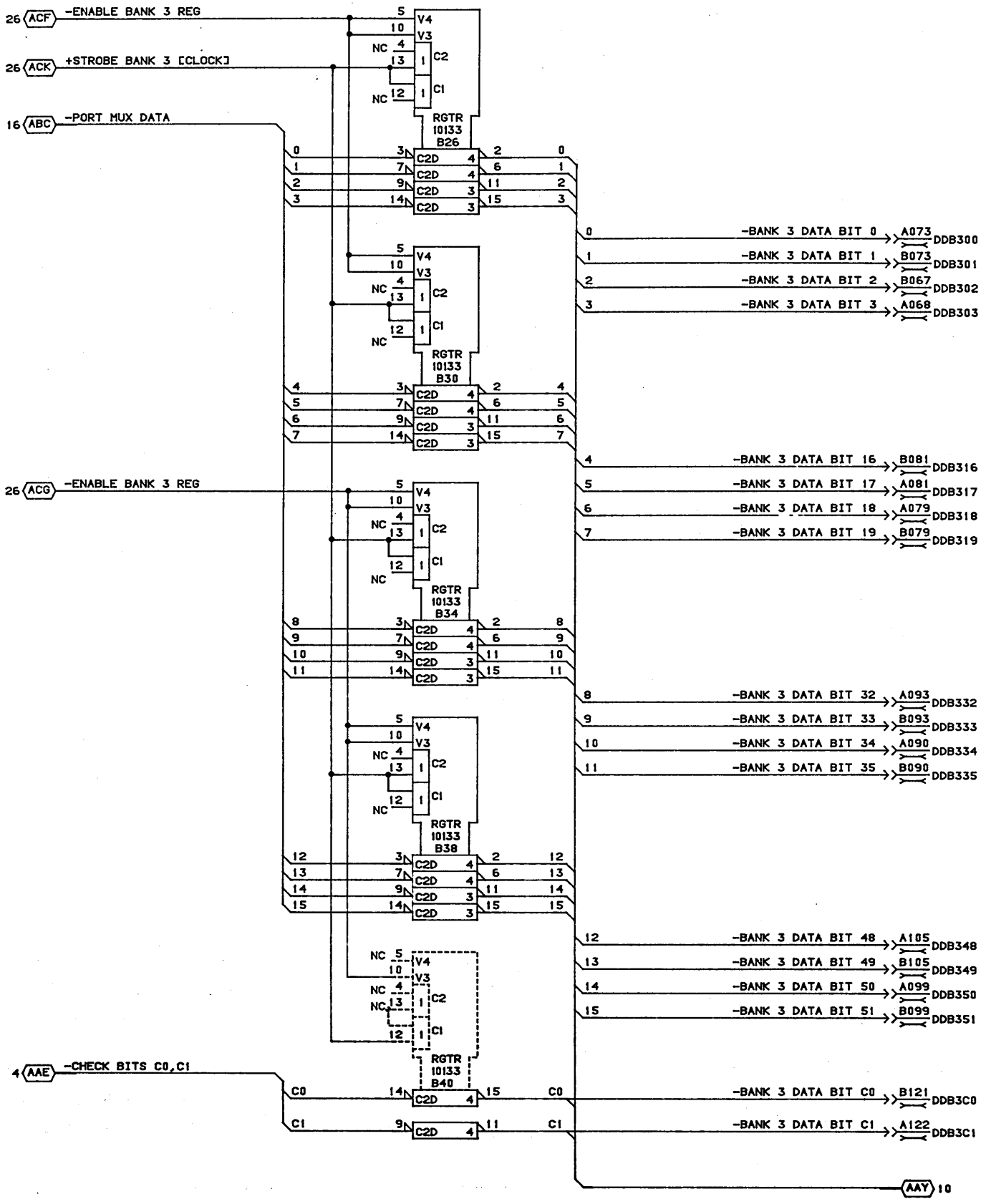

CONTROL DATA CANADA LTD	DATA REGISTER BI-DIRECTIONAL BUS BANK 3 TYPE: 1DD0	C		B
		27-MAR-85	SHEET 09	INST 01

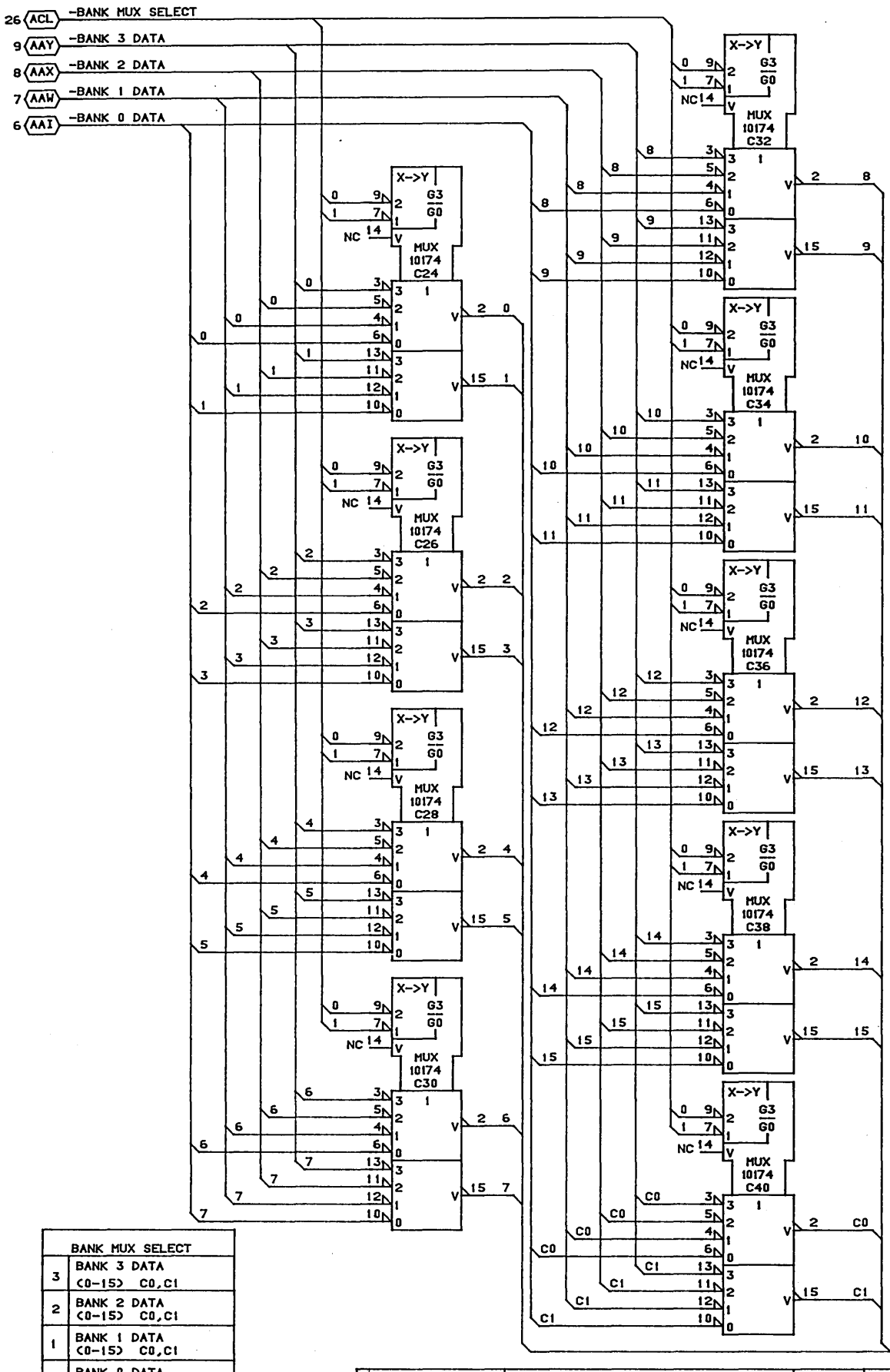

BANK MUX SELECT	
3	BANK 3 DATA (C0-15) C0,C1
2	BANK 2 DATA (C0-15) C0,C1
1	BANK 1 DATA (C0-15) C0,C1
0	BANK 0 DATA (C0-15) C0,C1

CONTROL DATA CANADA LTD	BANK SELECT MUX TYPE: 1DD0	C		B
		27-MAR-85	SHEET 10	INST 01

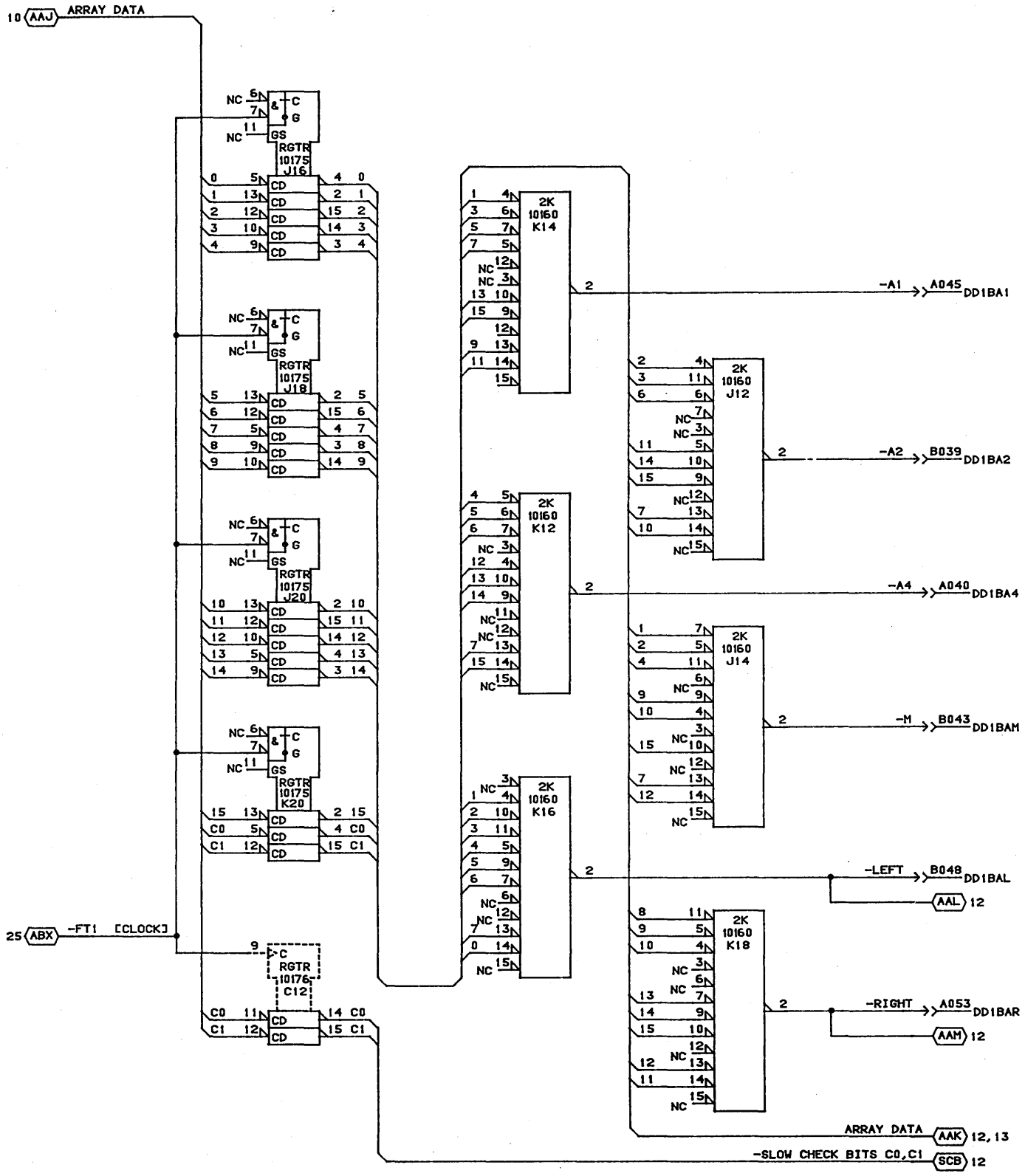

CONTROL DATA CANADA LTD	ARRAY DATA REGISTER ECC REGENERATION 1st LEVEL TYPE: 1DD0	C		B
		27-MAR-85	SHEET 11	INST 01

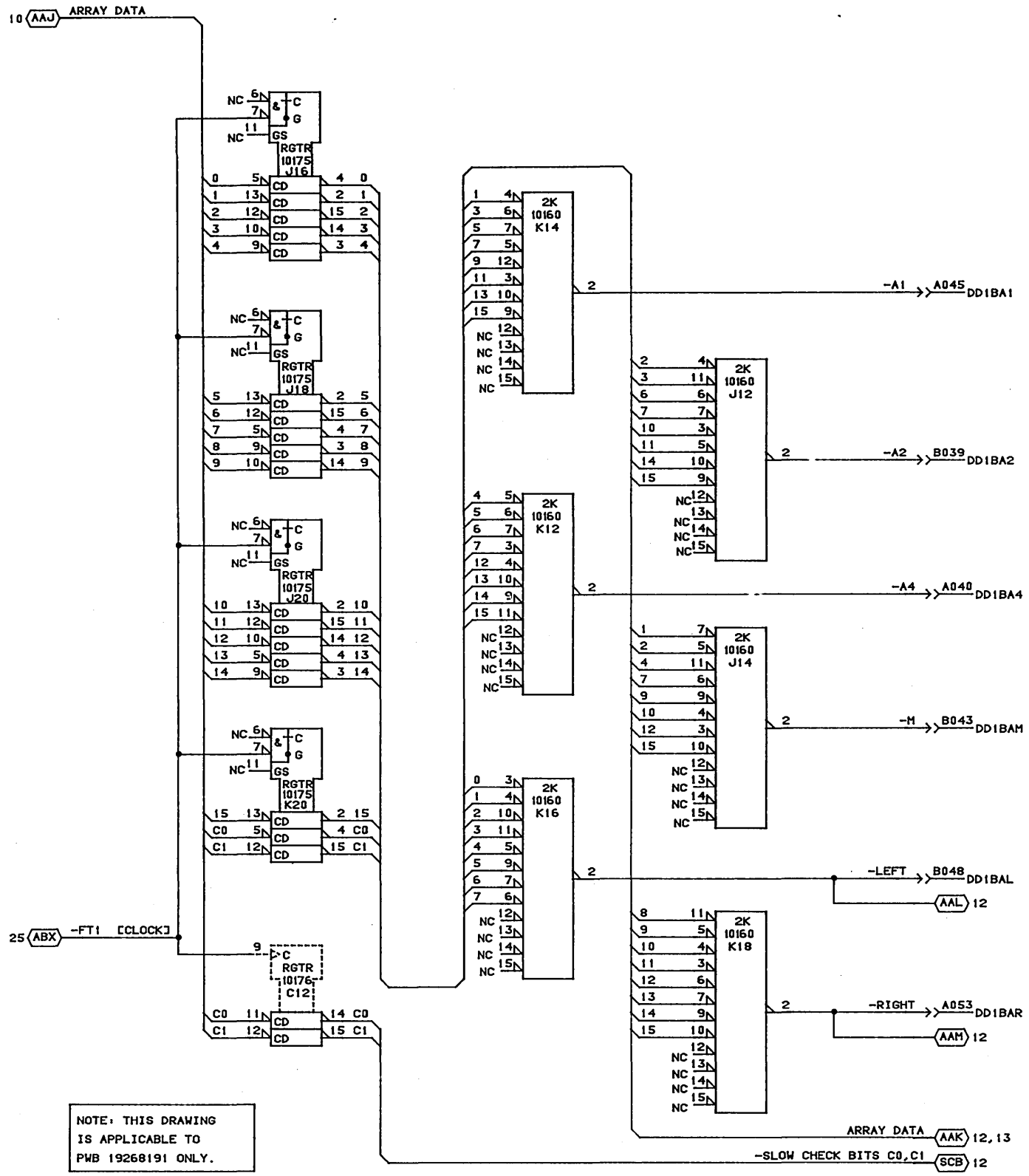

NOTE: THIS DRAWING IS APPLICABLE TO PWB 19268191 ONLY.

CONTROL DATA CANADA LTD	ARRAY DATA REGISTER ECC REGENERATION 1ST LEVEL TYPE: 1DD0		C	B
		27-MAR-85	SHEET 11A	

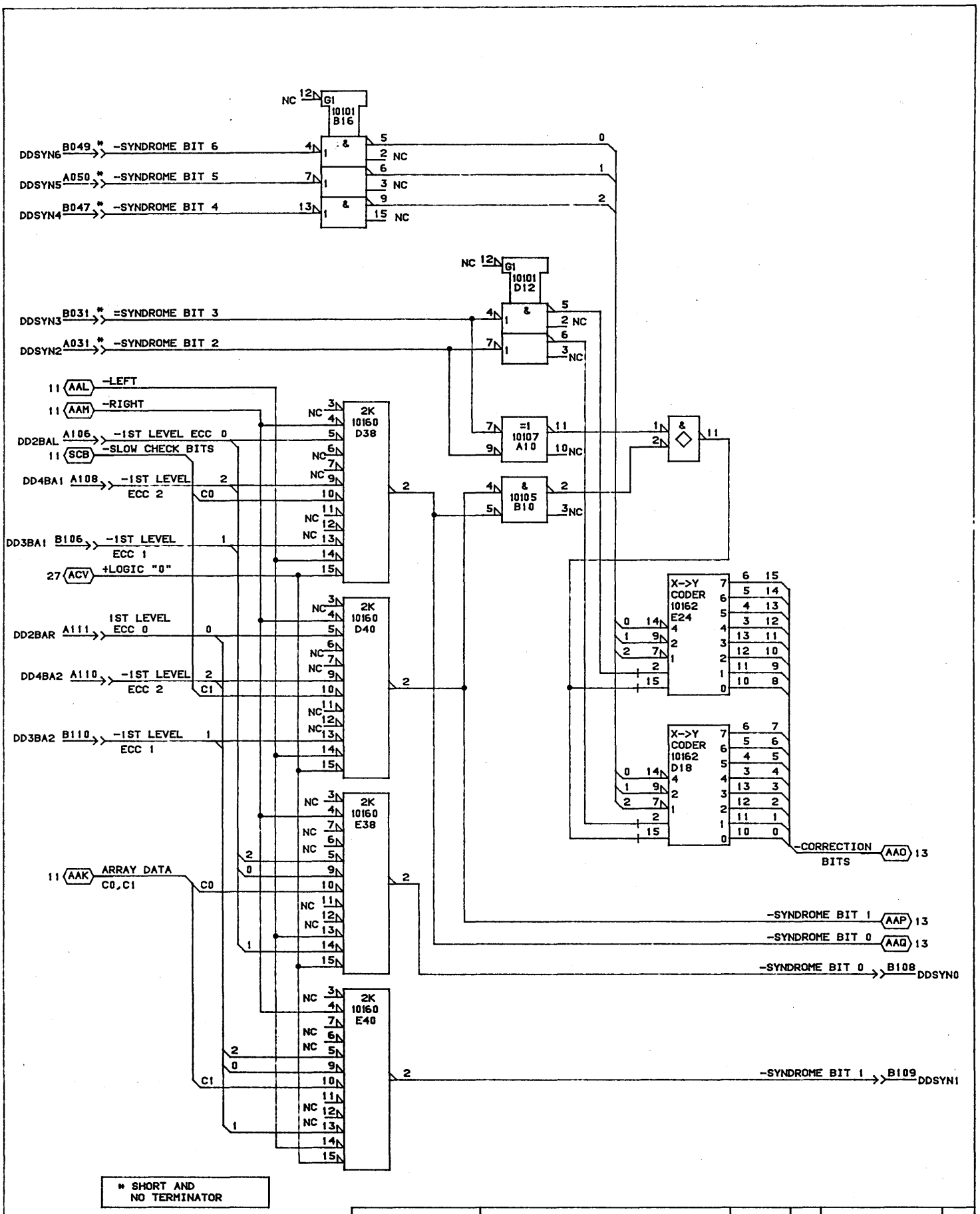

CONTROL DATA CANADA LTD	SYNDROME GENERATION AND DECODE TYPE: 1DD0	C		B
		27-MAR-85	SHEET 12	

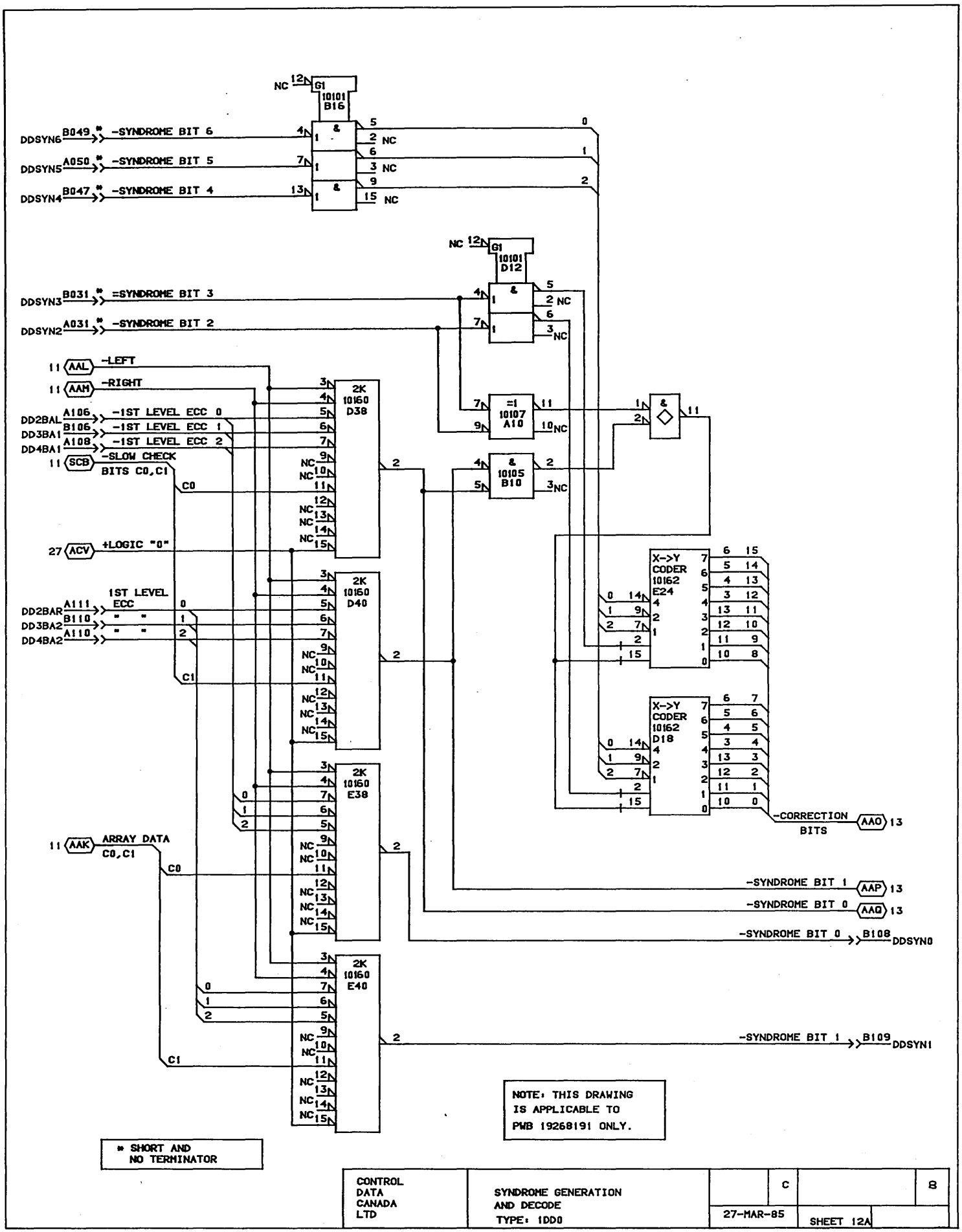
G1 10101 B16
DDSYN6 B049 * -SYNDROME BIT 6
DDSYN5 A050 * -SYNDROME BIT 5
DDSYN4 B047 * -SYNDROME BIT 4
G1 10101 D12
DDSYN3 B031 * =SYNDROME BIT 3
DDSYN2 A031 * -SYNDROME BIT 2
AAL -LEFT
AAM -RIGHT
DD2BAL A106 -1ST LEVEL ECC 0
DD3BA1 B106 -1ST LEVEL ECC 1
DD4BA1 A108 -1ST LEVEL ECC 2
SCB -SLOW CHECK BITS C0,C1
ACV +LOGIC "0"
DD2BAR A111 1ST LEVEL ECC
DD3BA2 B110 " "
DD4BA2 A110 " "
AAK ARRAY DATA C0,C1
2K 10160 D38
2K 10160 D40
2K 10160 E38
2K 10160 E40
=1 10107 A10
& 10105 B10
X->Y CODER 10162 E24
X->Y CODER 10162 D18
-CORRECTION BITS AAO
-SYNDROME BIT 1 AAP
-SYNDROME BIT 0 AAQ
-SYNDROME BIT 0 B108 DDSYN0
-SYNDROME BIT 1 B109 DDSYN1
NOTE: THIS DRAWING IS APPLICABLE TO PWB 19268191 ONLY.
* SHORT AND NO TERMINATOR
CONTROL DATA CANADA LTD
SYNDROME GENERATION AND DECODE TYPE: 1DD0
C
B
27-MAR-85
SHEET 12A

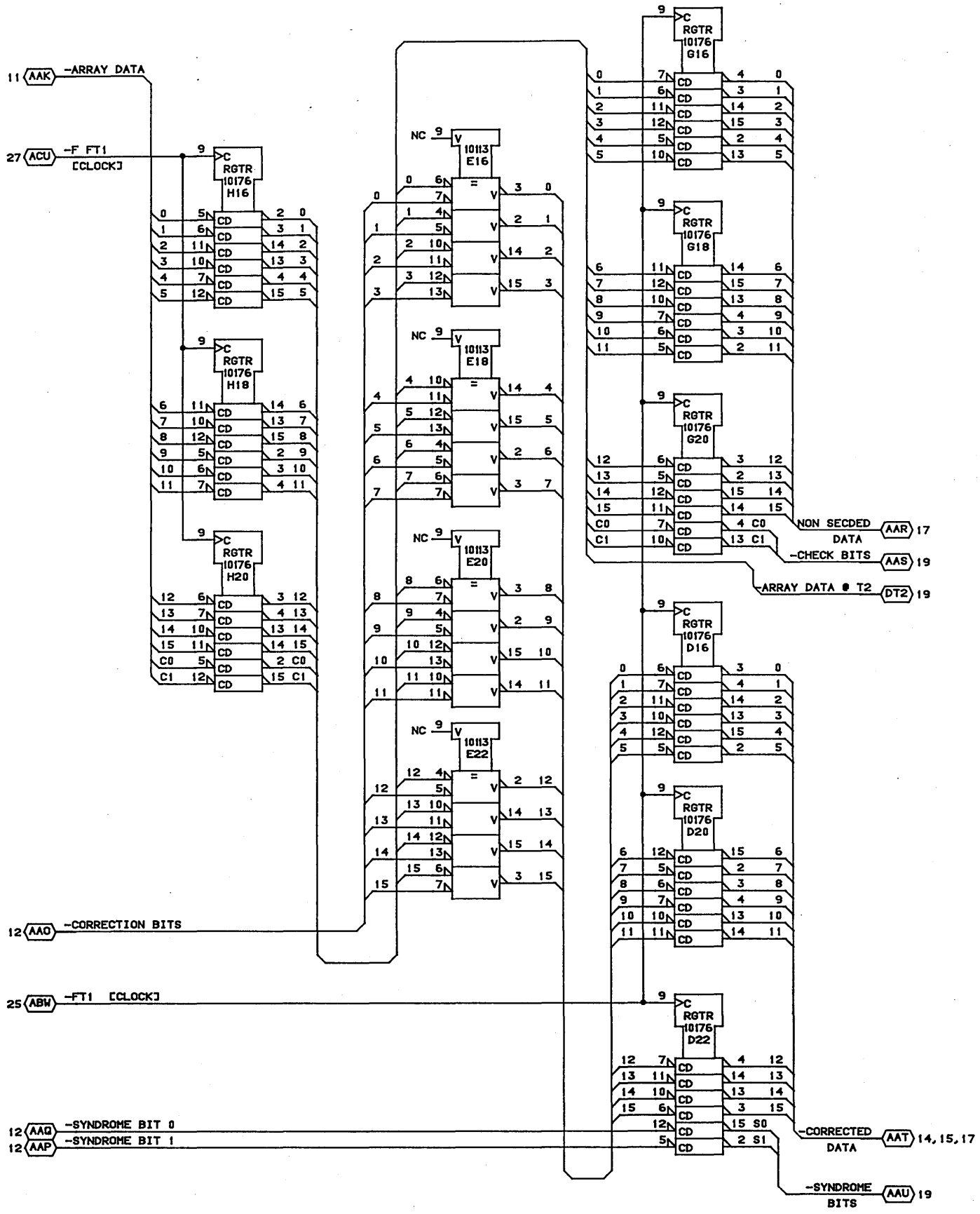

CONTROL DATA CANADA LTD	ERROR CORRECTION MODULE ASSY:210 PAK TYPE: 1DD0	C		B
		27-MAR-85	SHEET 13	INST 01

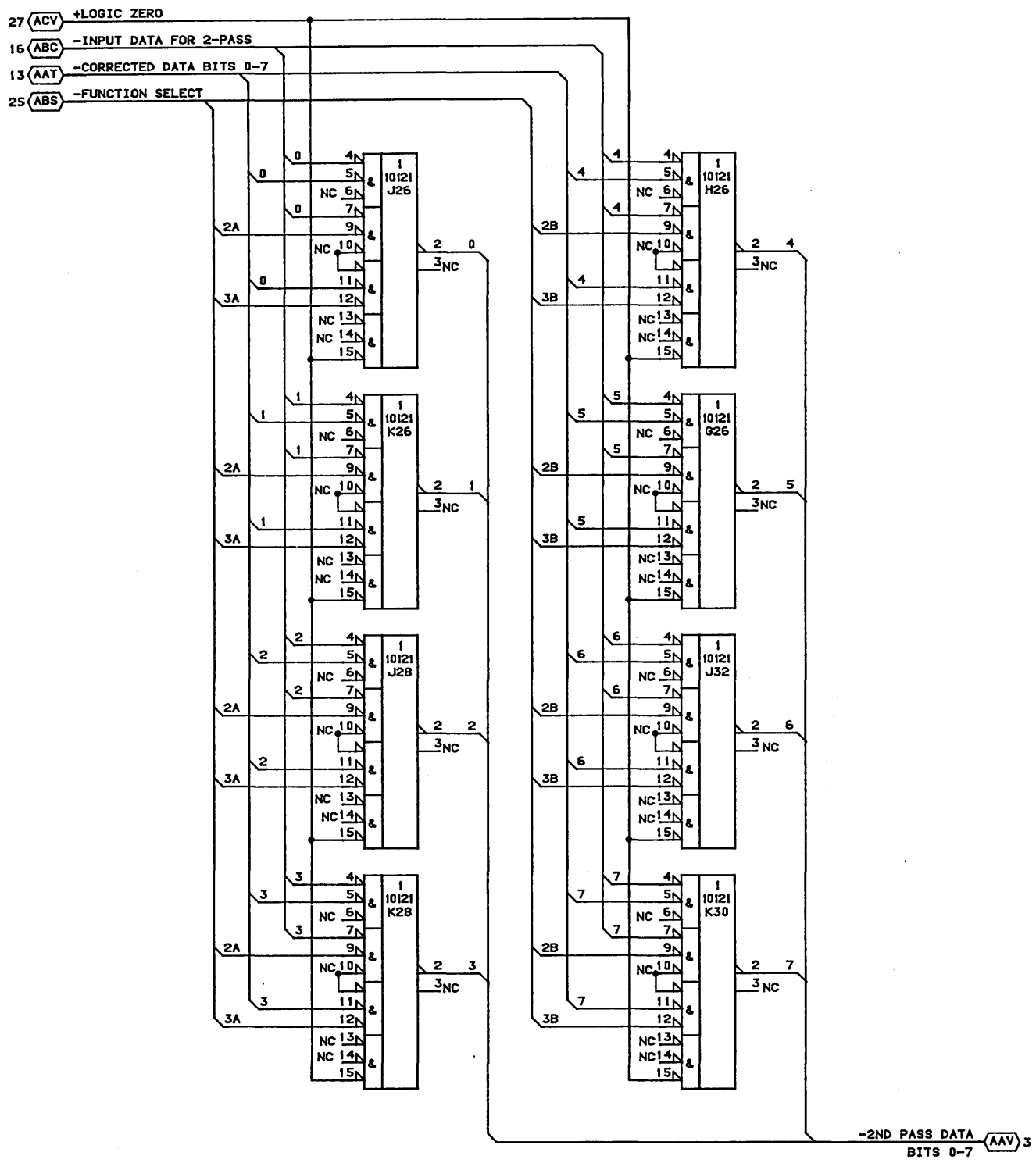

CONTROL DATA CANADA LTD	SECOND PASS DATA SELECTOR BYTES 0L, 2L TYPE: 1DD0	C		B
		27-MAR-85	SHEET 14	INST 01

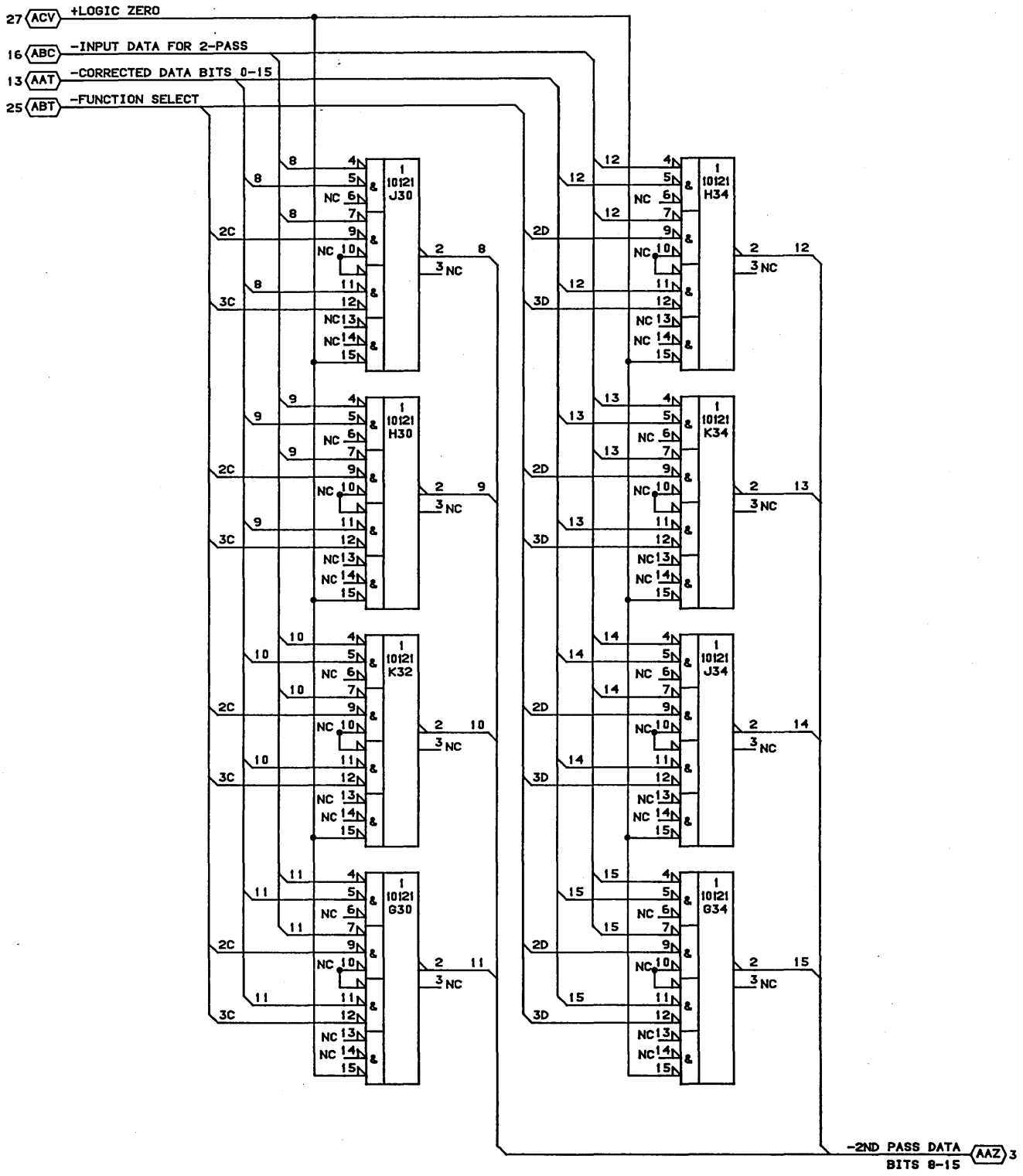

CONTROL DATA CANADA LTD	SECOND PASS DATA SELECTOR BYTES 4L,6L TYPE: 1DD0		C		B
		27-MAR-85	SHEET 15	INST 01	

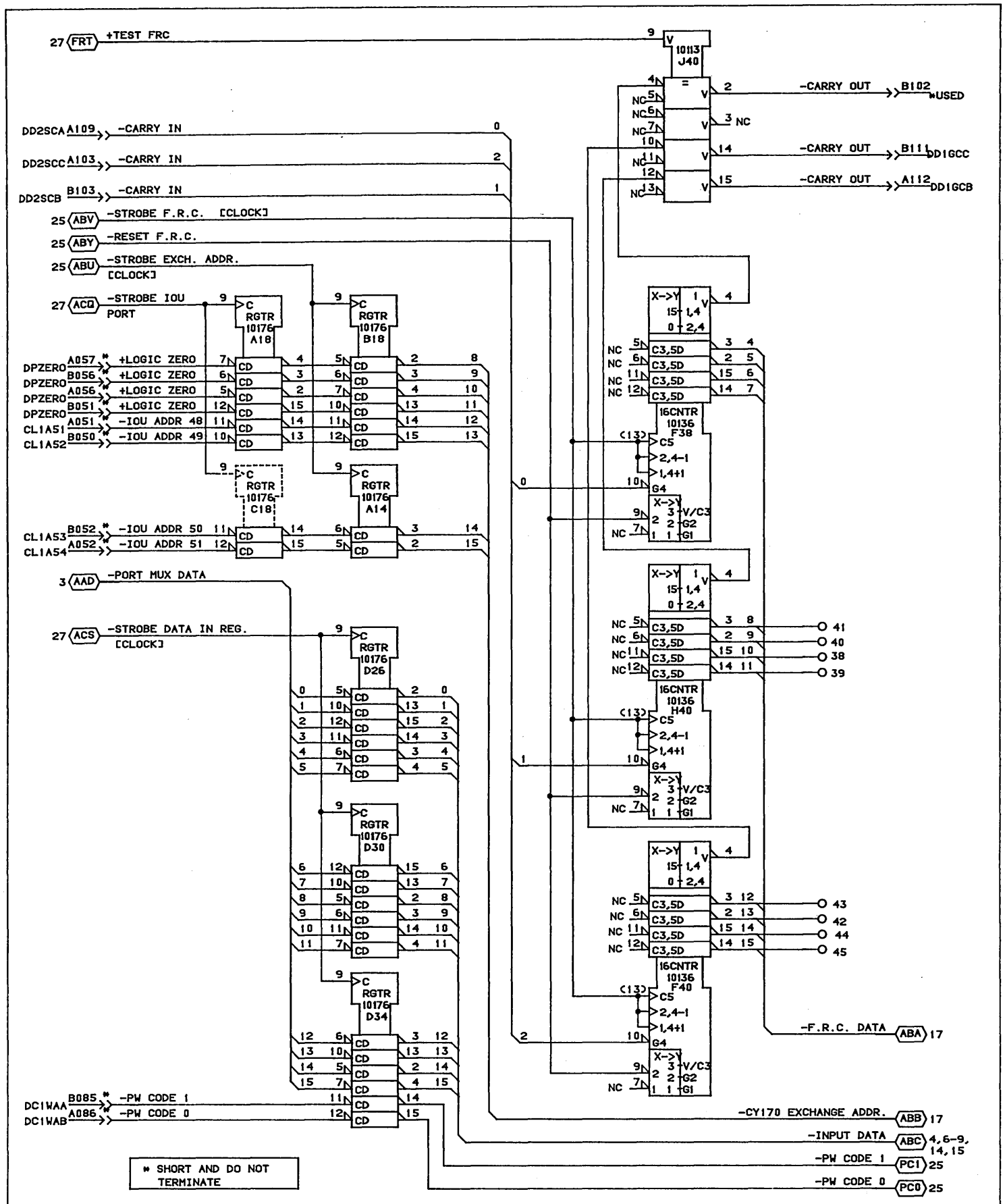

CONTROL DATA CANADA LTD	DATA IN HOLDING REG. EXCHANGE ADDRESS REG. FREE RUNNING COUNTER TYPE: 1DD0 MODULE ASSY:210PAK	C		B
		27-MAR-85	SHEET 16	

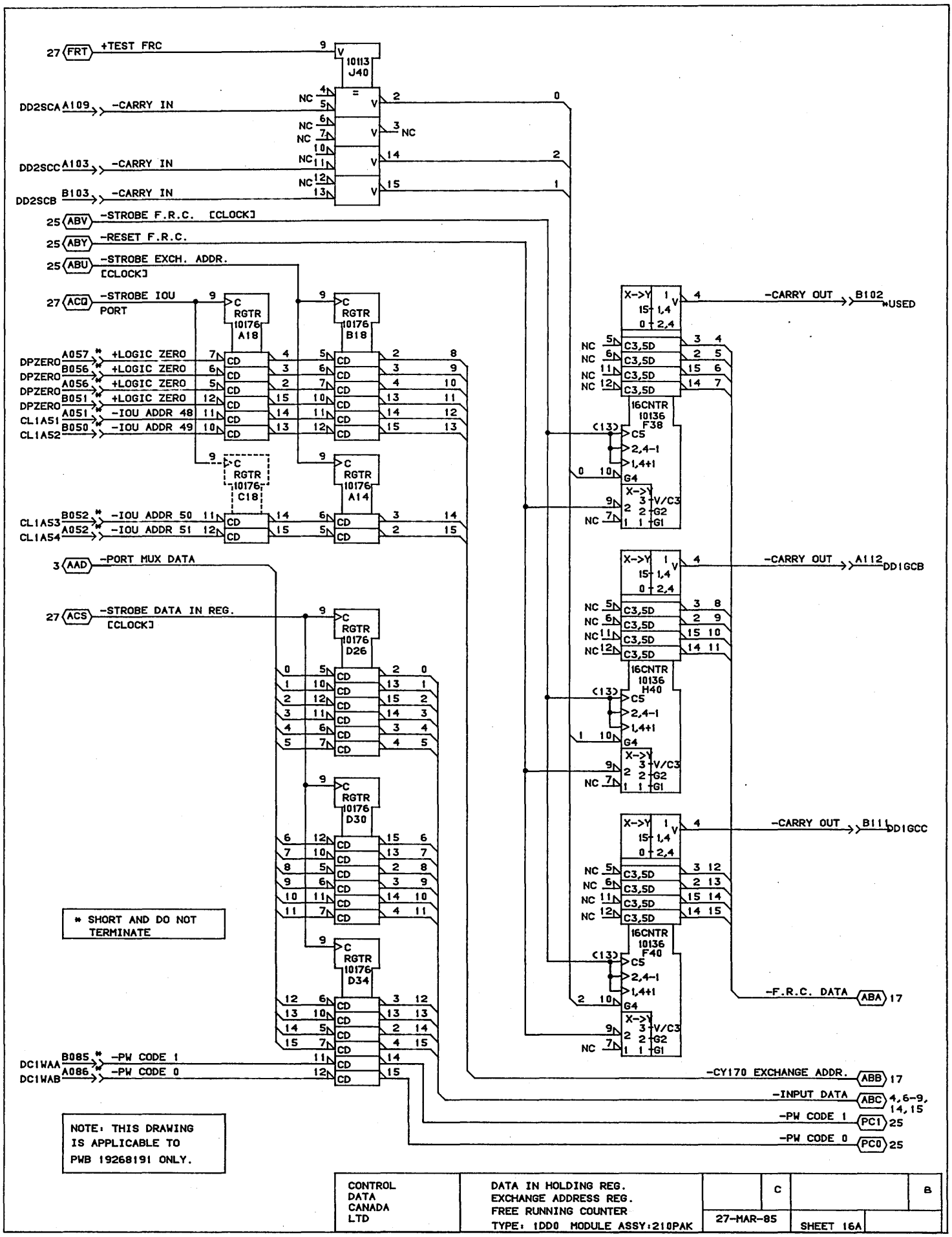

CONTROL DATA CANADA LTD	DATA IN HOLDING REG. EXCHANGE ADDRESS REG. FREE RUNNING COUNTER TYPE: 1DD0 MODULE ASSY:210PAK	C		B
		27-MAR-85	SHEET 16A	

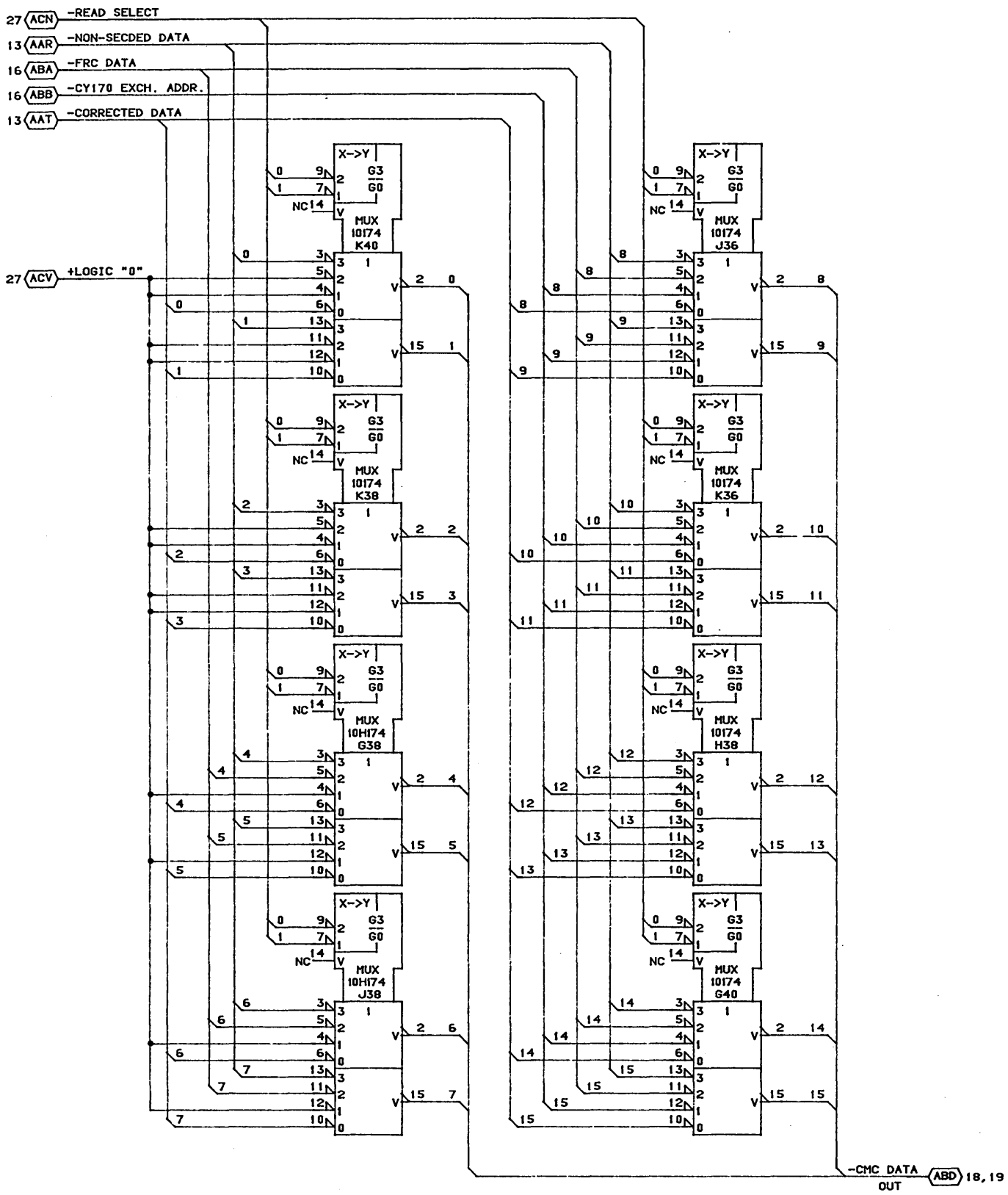

CONTROL DATA CANADA LTD	OUTPUT DATA MUX TYPE: 1DD0	C		B
		27-MAR-85	SHEET 17	INST 01

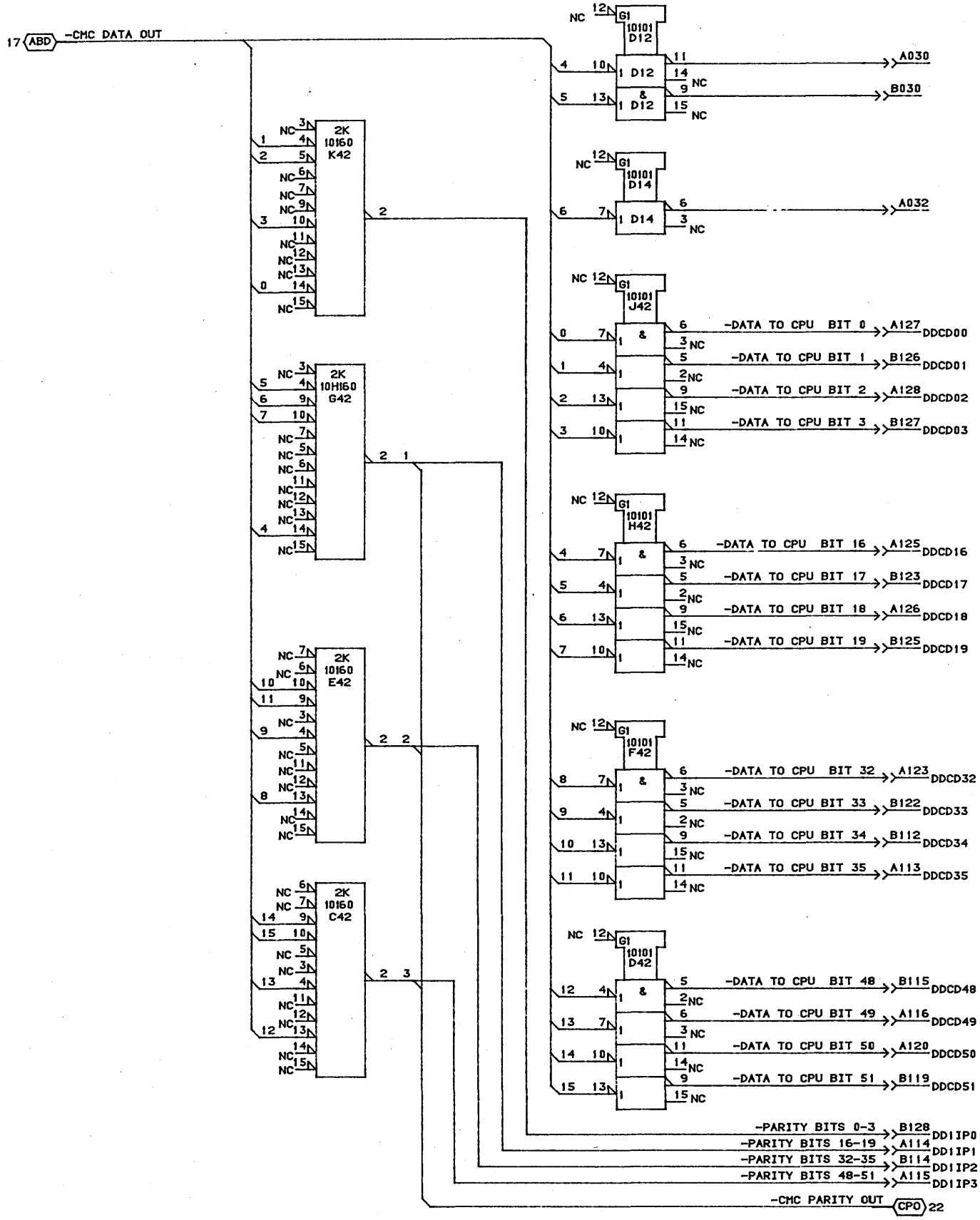

CONTROL DATA CANADA LTD	FANOUT TO CPUs' DATA OUT PARITY CHECK 1ST LEVEL TYPE: 1DD0	C		B
		29-MAR-85	SHEET 18	INST 01

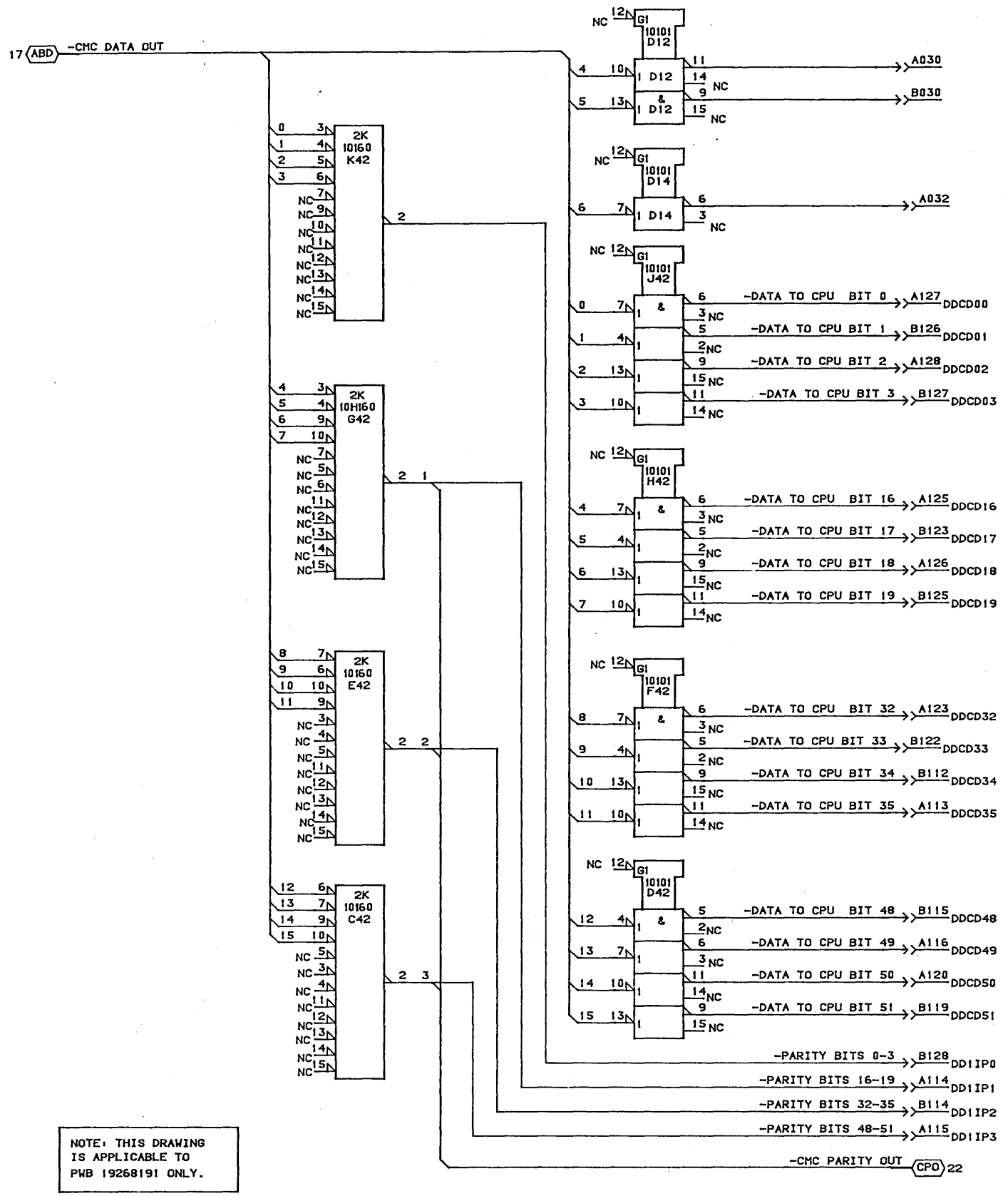

NOTE: THIS DRAWING IS APPLICABLE TO PWB 19268191 ONLY.

CONTROL DATA CANADA LTD	FANOUT TO CPU'S DATA OUT PARITY CHECK 1ST LEVEL TYPE: 1DD0	C		8
		27-MAR-85	SHEET 18A	

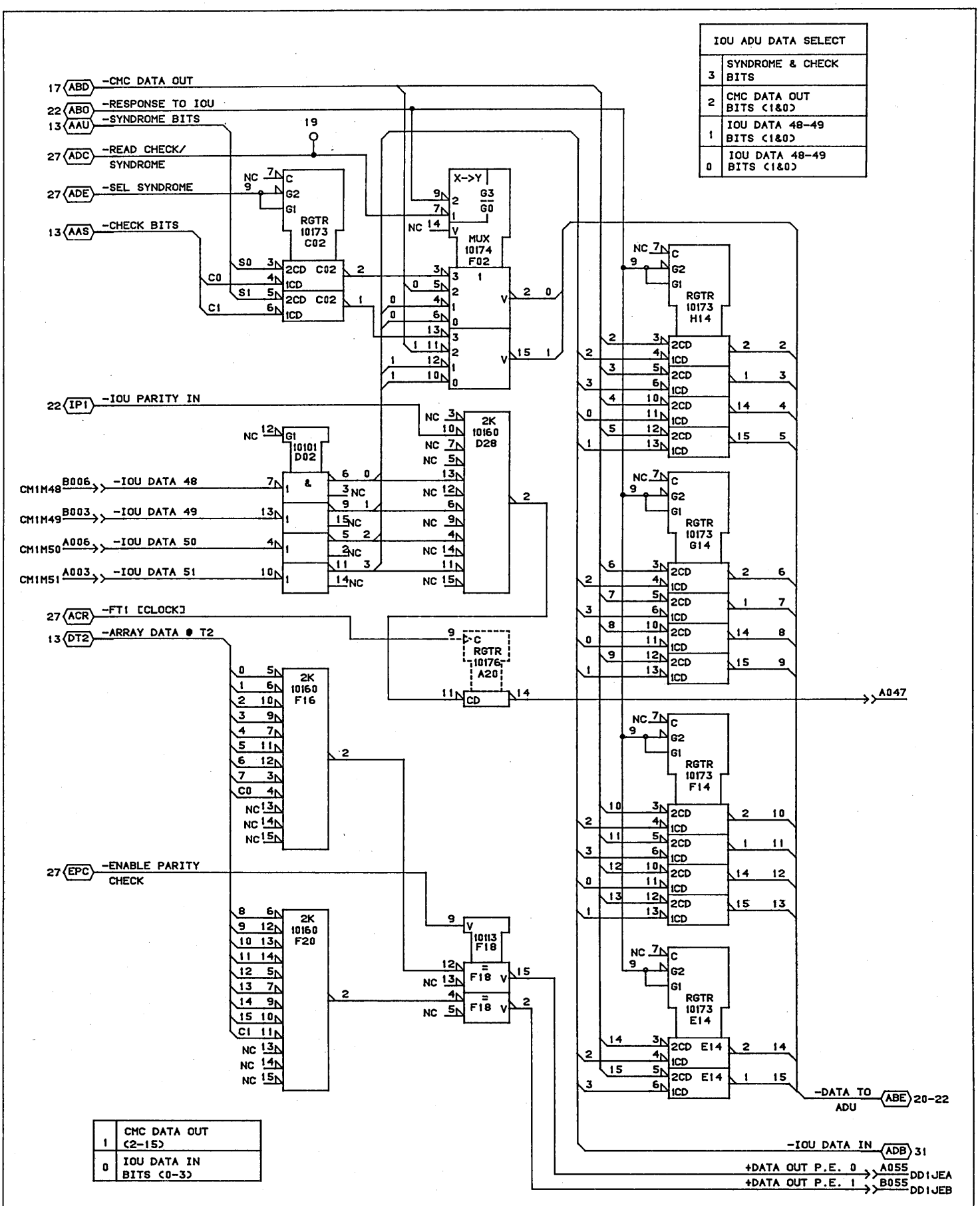

CONTROL DATA CANADA LTD	IOU ADU DATA SELECT IOU ADU ADDRESS F/O TYPE:1DD0	C		B
		27-MAR-85	SHEET 19	INST 01

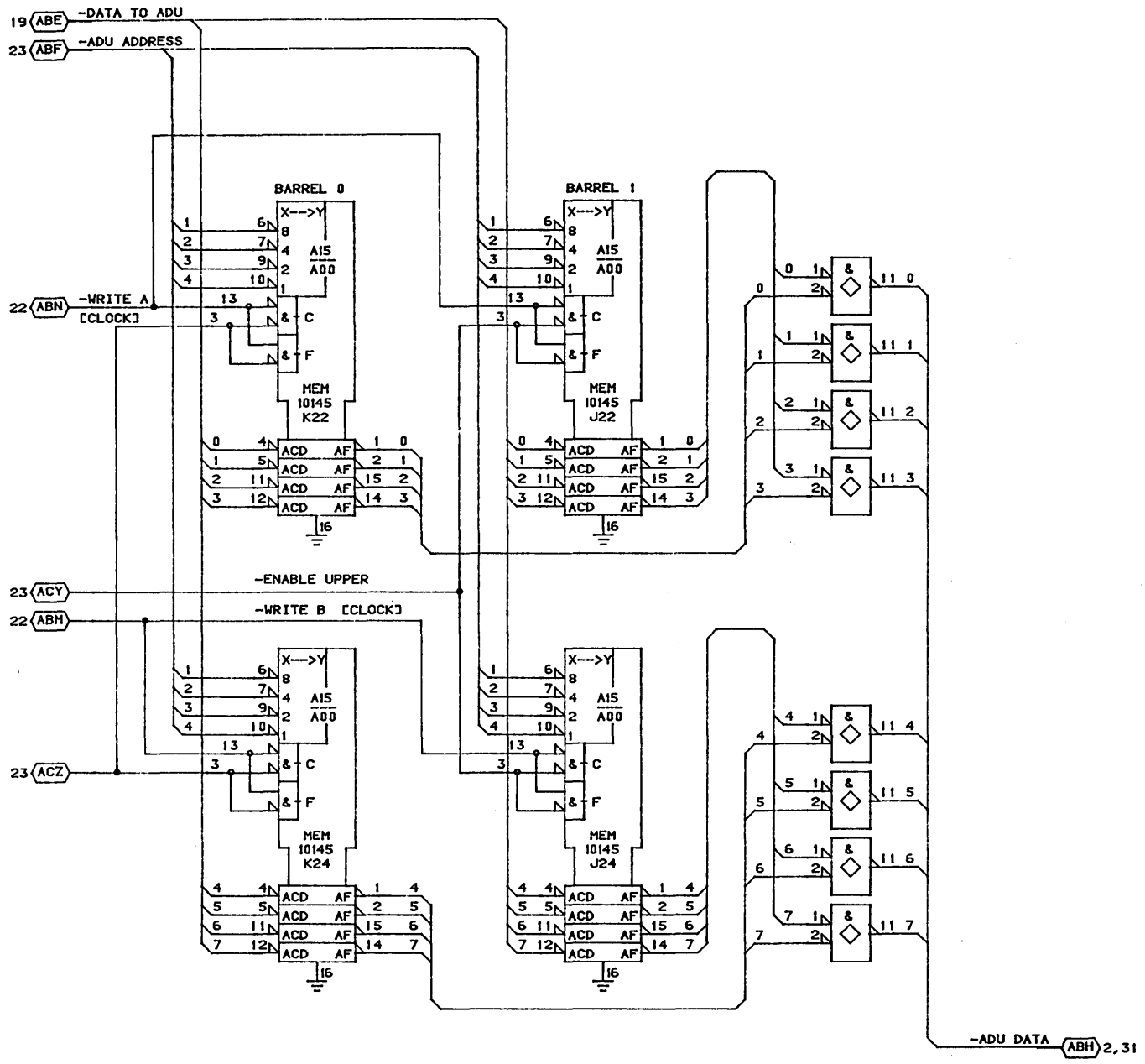

CONTROL DATA CANADA LTD	IOU ADU BUFFER NIBBLES A AND B TYPE: 1DD0	C		B
		29-MAR-85	SHEET 20	INST 01

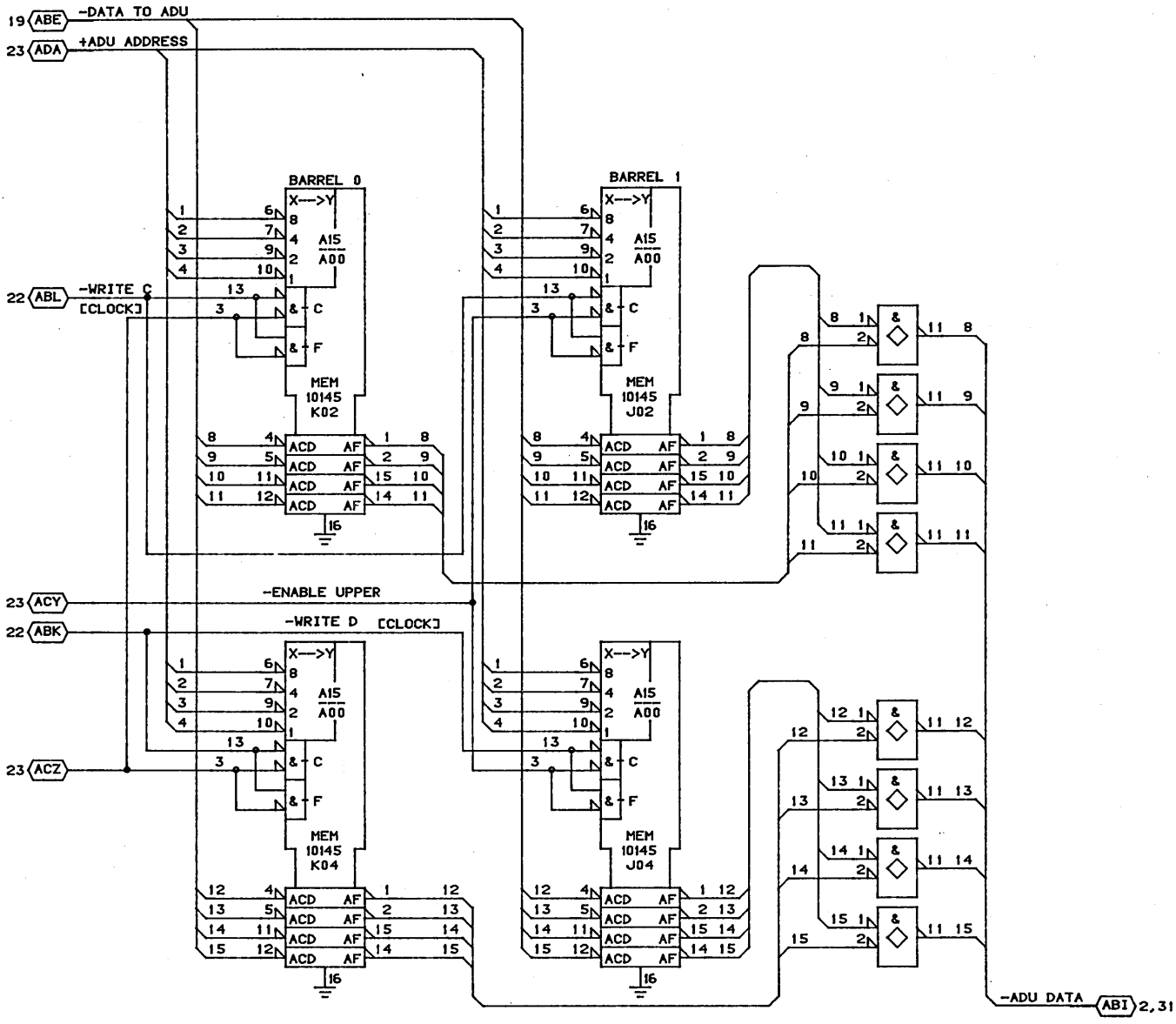

CONTROL DATA CANADA LTD	IOU ADU BUFFER NIBBLES C AND D MODULE ASSY:210 PAK TYPE: 1DD0	C		B
		29-MAR-85	SHEET 21	INST 01

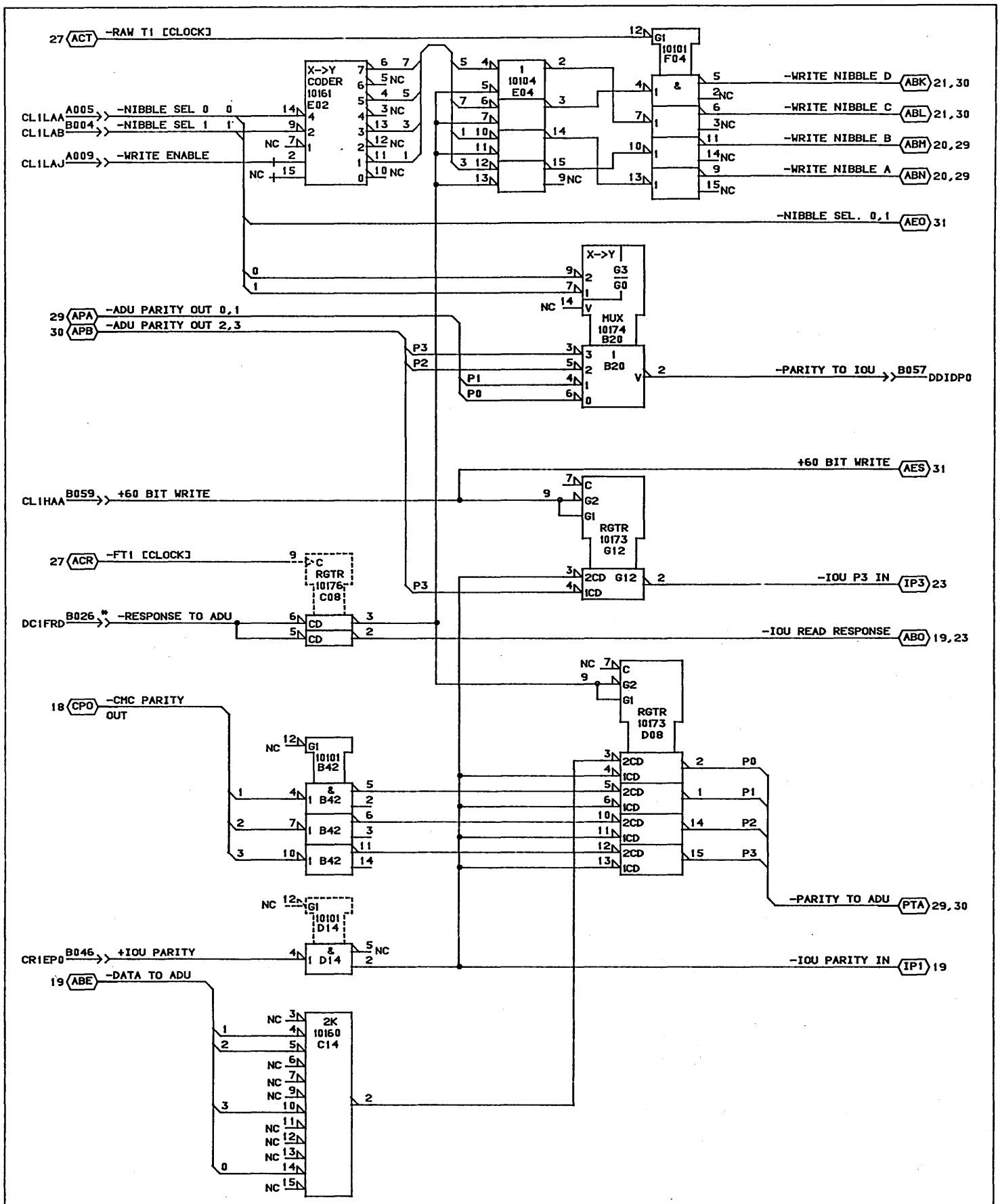

CONTROL DATA CANADA LTD	ADU PARITY WRITE NIBBLES A,B,C,D MODULE ASSY:210 PAK TYPE: 1DD0	C	--------	B
		27-MAR-85	SHEET 22	INST 01

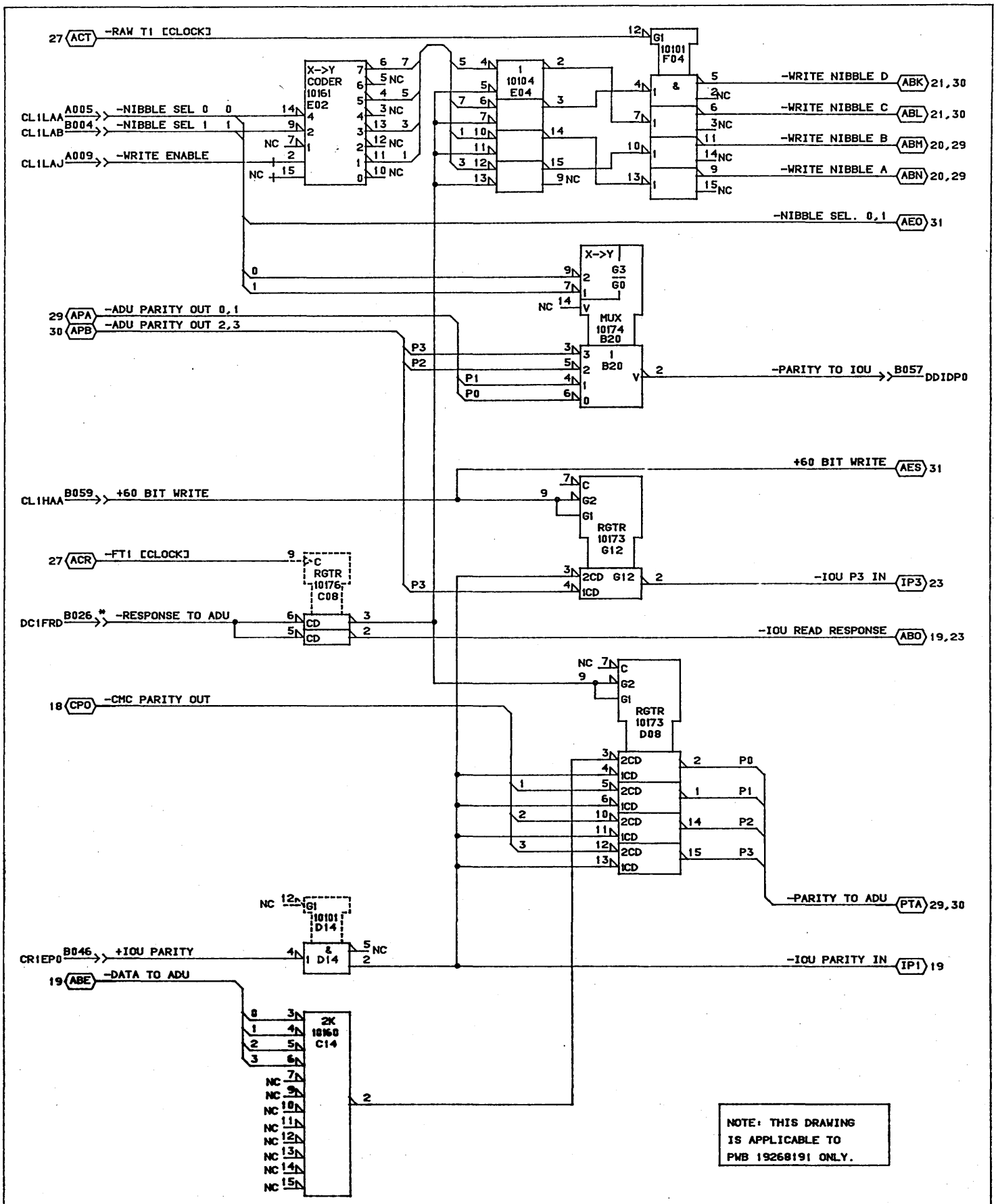

CONTROL DATA CANADA LTD	ADU PARITY WRITE NIBBLES A,B,C,D MODULE ASSY:210 PAK TYPE: 1DD0	C		B
		27-MAR-85	SHEET 22A	

ADU ADDRESS SELECT	
1	RESPONSE ADDRESS
0	REQUEST ADDRESS

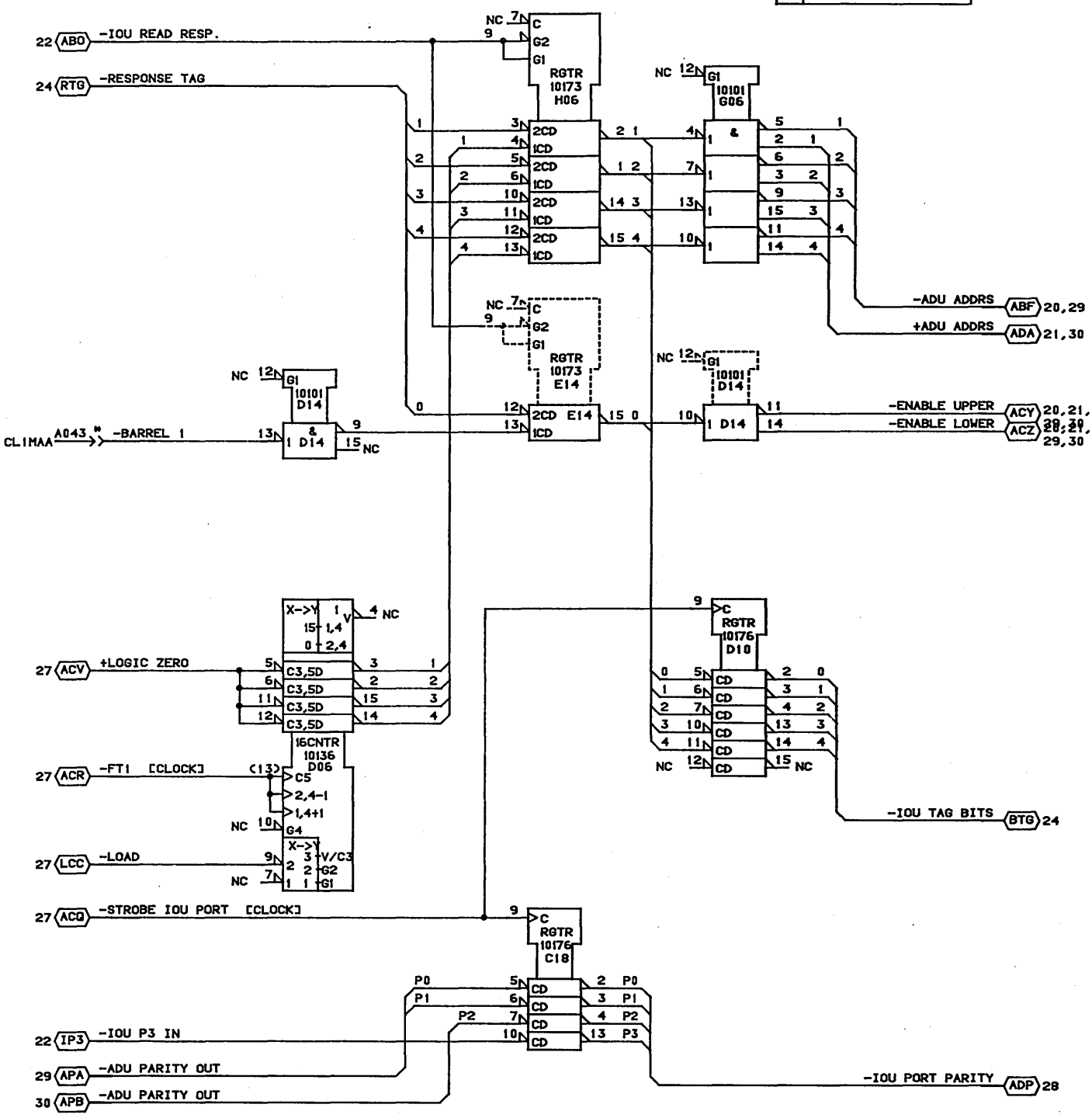

* SHORT AND NO TERMINATOR

CONTROL DATA CANADA LTD	ADU ADDRESS FORMATION MODULE ASSY:210 PAK TYPE: 1DD0	C		B
		28-MAR-85	SHEET 23	INST 01

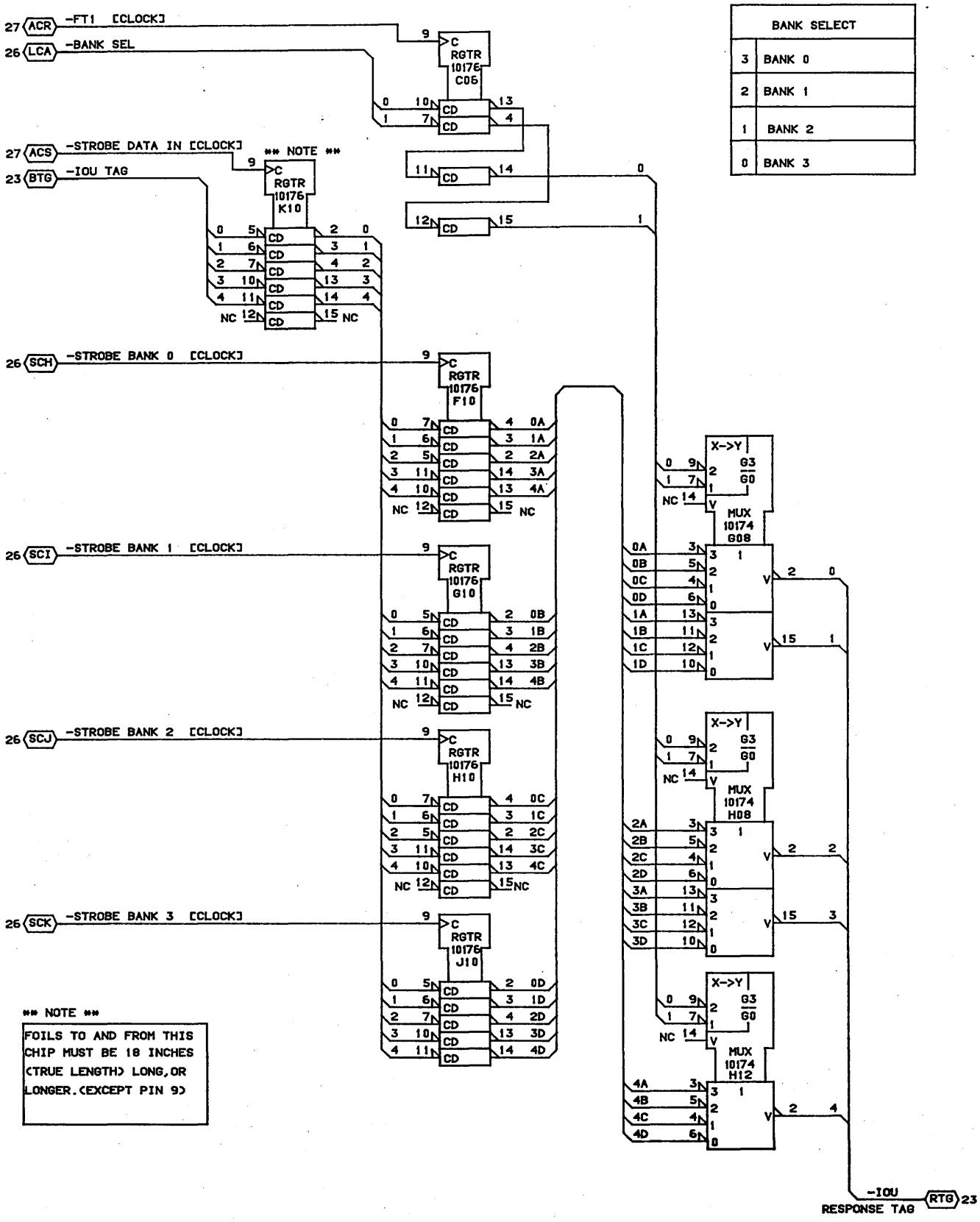

BANK SELECT	
3	BANK 0
2	BANK 1
1	BANK 2
0	BANK 3

CONTROL DATA CANADA LTD	BANK HOLDING REGISTERS FOR ADU TAGS MODULE ASSY:210 PAK TYPE: 1DD0		C	B
		28-MAR-85	SHEET 24	INST 01

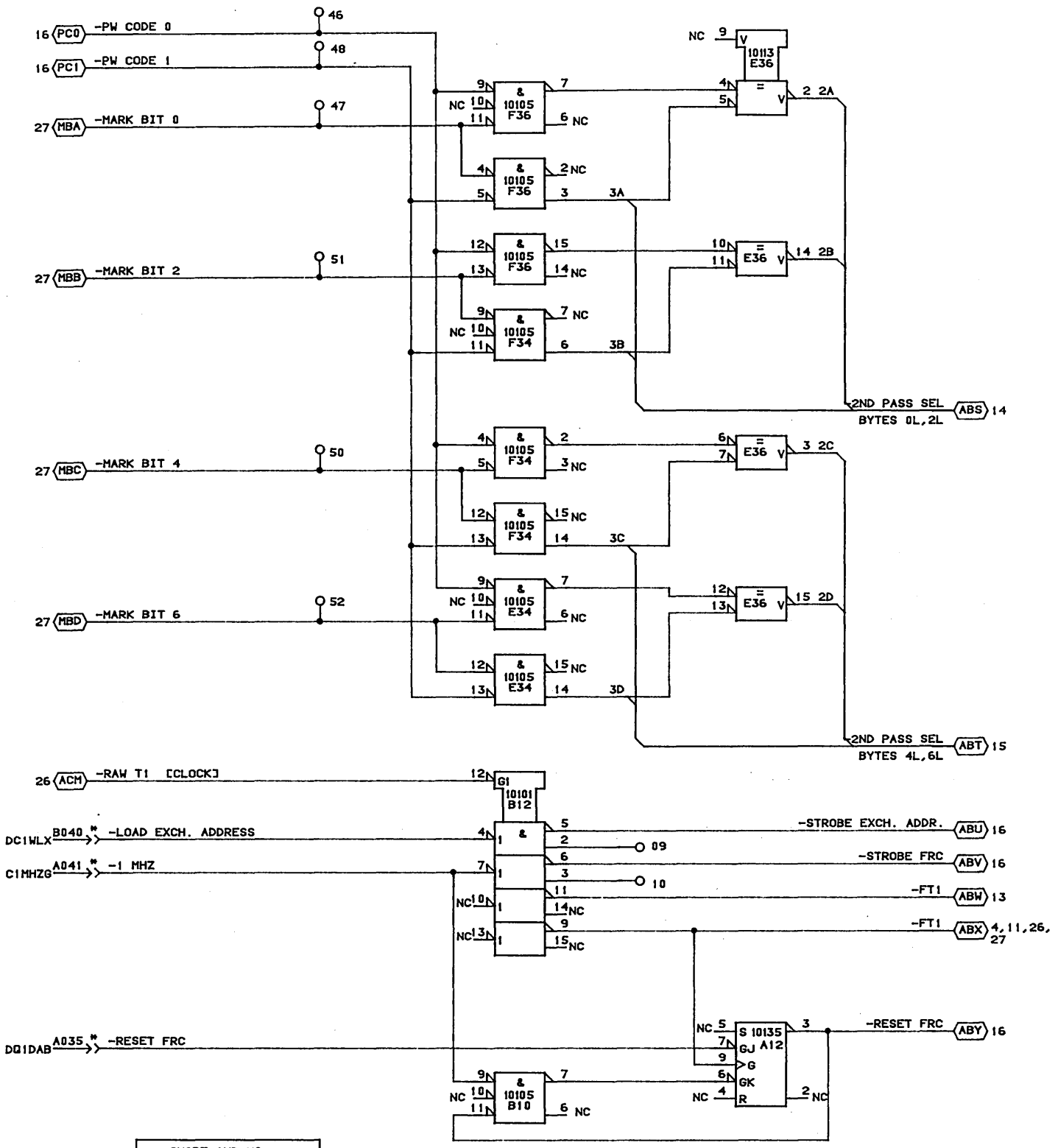

CONTROL DATA CANADA LTD	PARTIAL WRITE CONTROL EXCH. ADDRESS AND FRC CONTROL MODULE ASSY:210 PAK TYPE: 1DD0	C		B
		28-MAR-85	SHEET 25	INST 01

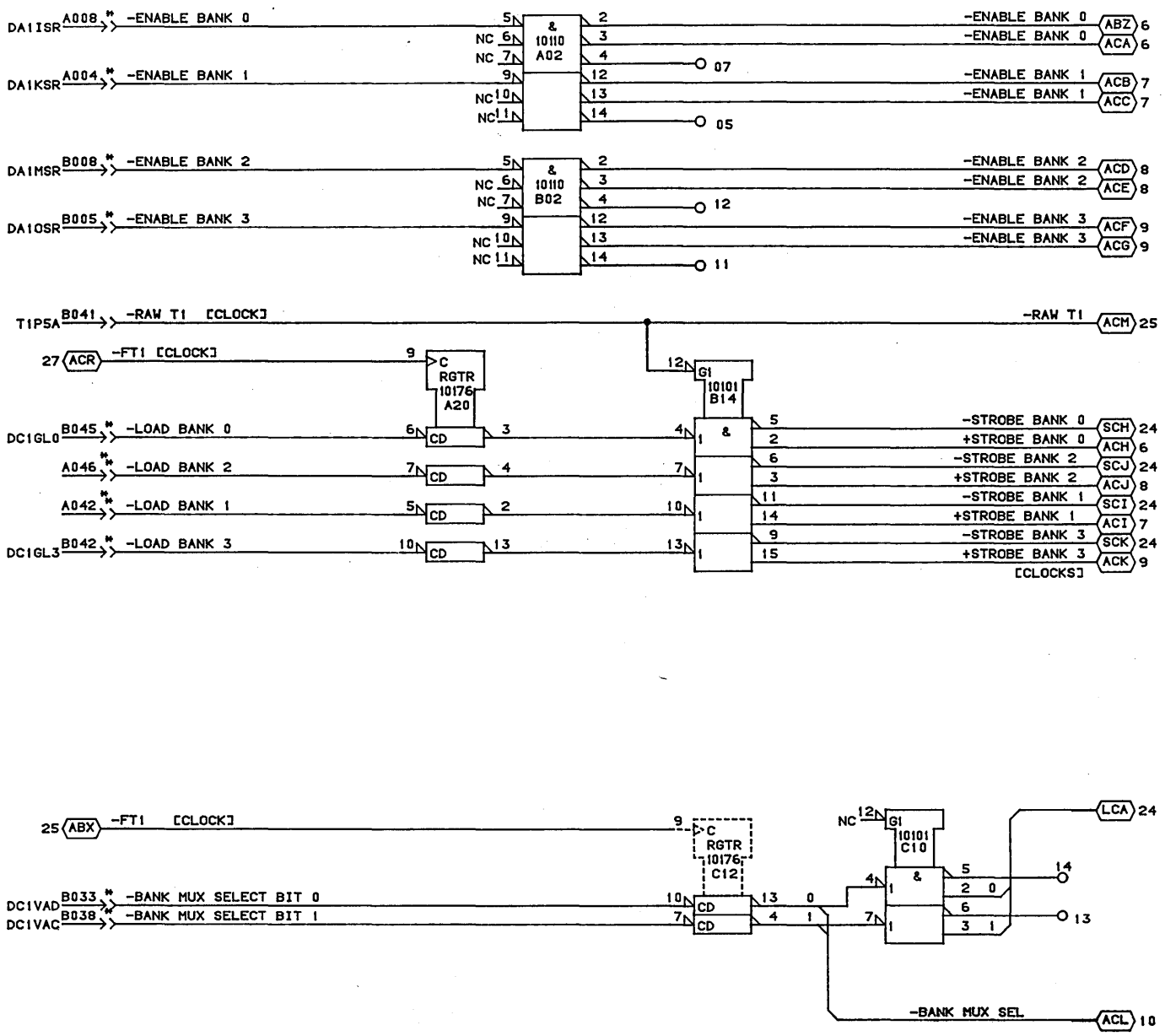

* SHORT AND NO TERMINATOR

CONTROL DATA CANADA LTD	BANK ENABLE AND LOAD BANK MUX SELECT MODULE ASSY:210 PAK TYPE: 1DD0	C		B
		28-MAR-85	SHEET 26	INST 01

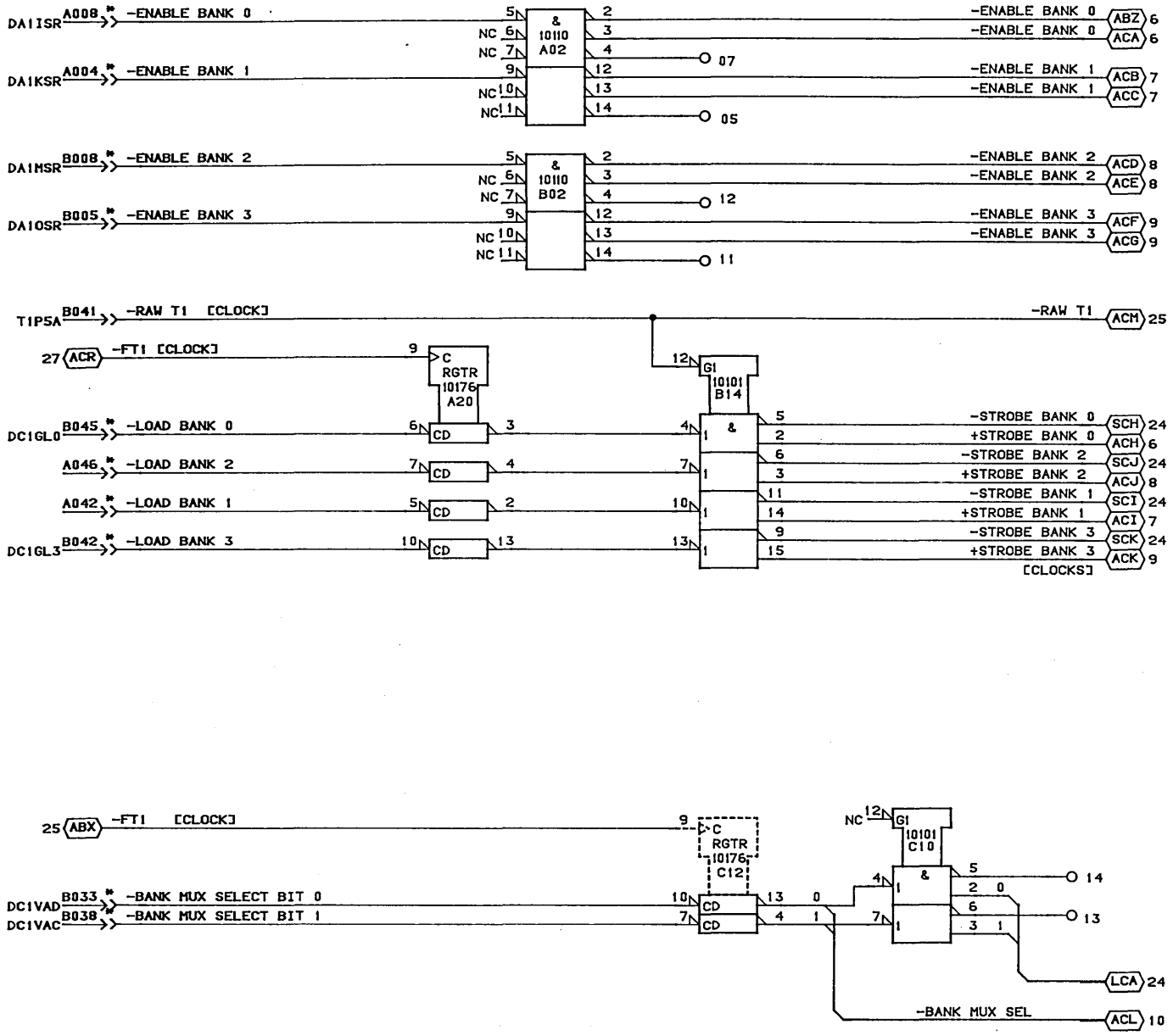

NOTE: THIS DRAWING IS APPLICABLE TO PWB 19268191 ONLY.

* SHORT AND NO TERMINATOR

CONTROL DATA CANADA LTD	BANK ENABLE AND LOAD BANK MUX SELECT MODULE ASSY:210 PAK TYPE: 1DD0	C		B
		28-MAR-85	SHEET 26A	

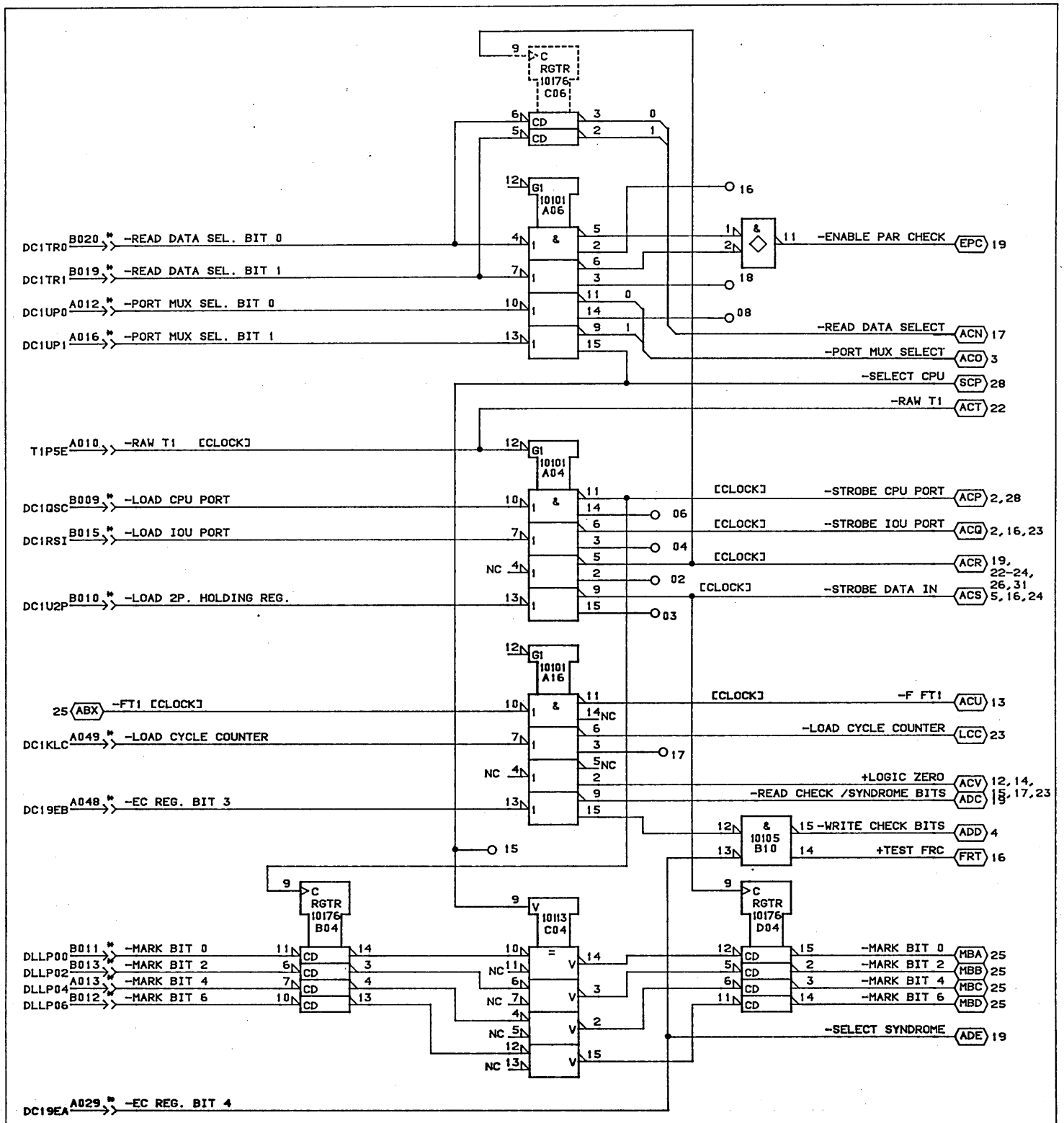

CONTROL DATA CANADA LTD	MISC CONTROL MODULE ASSY:210 PAK TYPE: 1DD0	C		B
		28-MAR-85	SHEET 27	INST 01

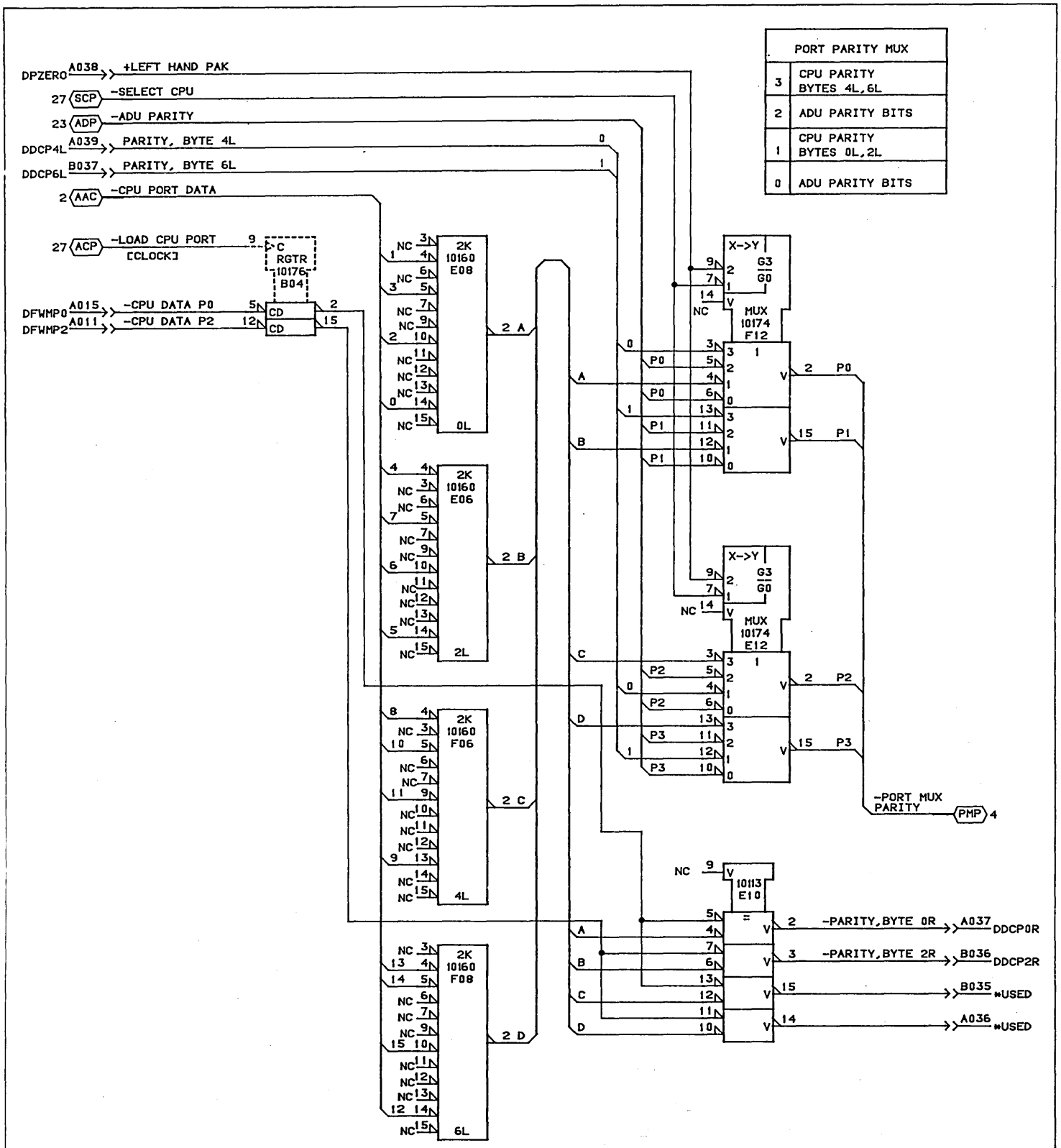

CONTROL DATA CANADA LTD	CPU PARITY IN,OUT MODULE ASSY:210 PAK TYPE: 1DD0		C	B
		28-MAR-85	SHEET 28	

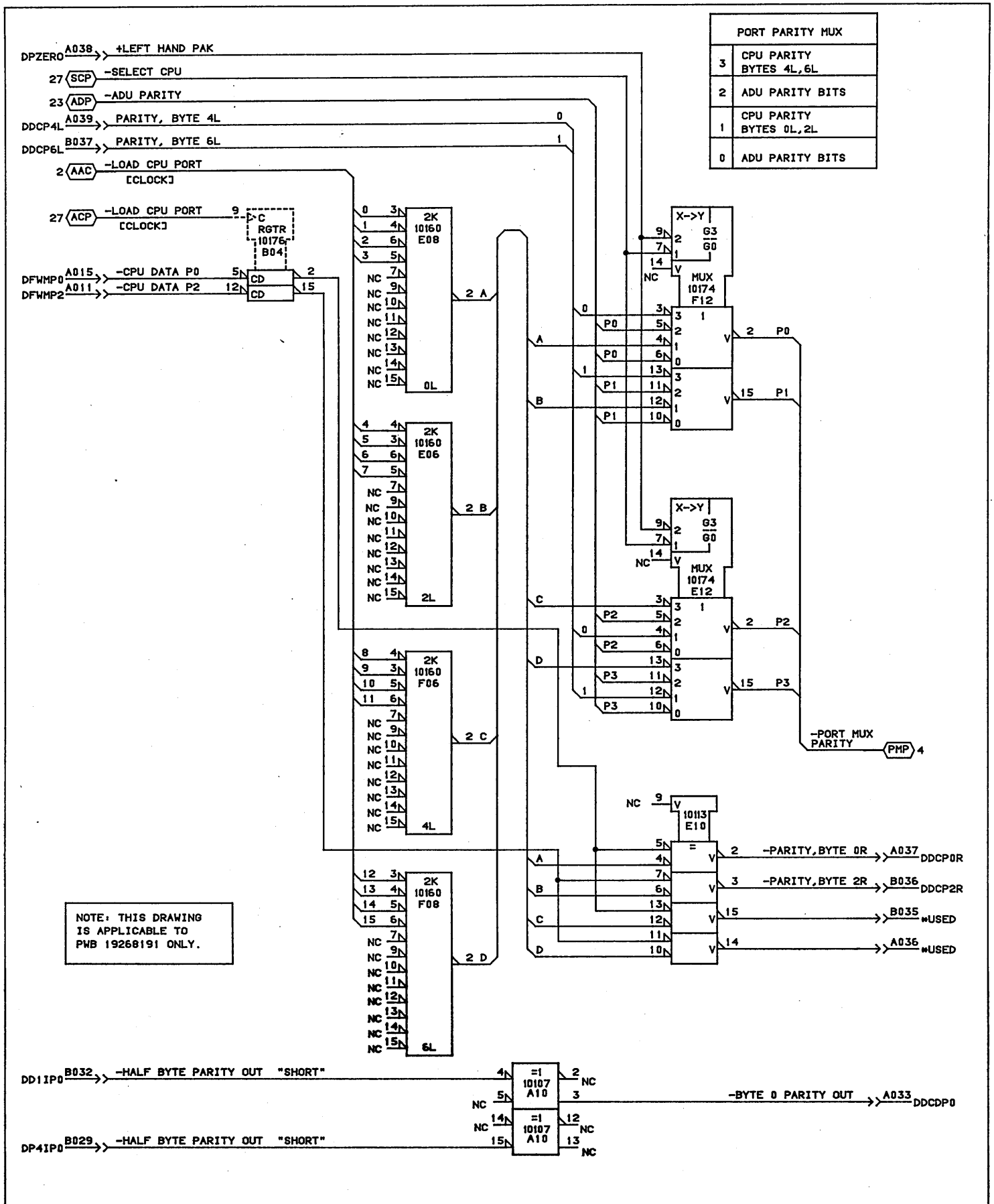
PORT PARITY MUX
3 CPU PARITY BYTES 4L,6L
2 ADU PARITY BITS
1 CPU PARITY BYTES 0L,2L
0 ADU PARITY BITS
DPZERO A038 +LEFT HAND PAK
27 SCP -SELECT CPU
23 ADP -ADU PARITY
DDCP4L A039 PARITY, BYTE 4L
DDCP6L B037 PARITY, BYTE 6L
2 AAC -LOAD CPU PORT [CLOCK]
27 ACP -LOAD CPU PORT [CLOCK]
RGTR 10176 B04
DFWMP0 A015 -CPU DATA P0
DFWMP2 A011 -CPU DATA P2
2K 10160 E08
2K 10160 E06
2K 10160 F06
2K 10160 F08
0L
2L
4L
6L
2 A
2 B
2 C
2 D
X->Y
G3
G0
MUX 10174 F12
MUX 10174 E12
P0
P1
P2
P3
-PORT MUX PARITY
PMP
10113 E10
-PARITY,BYTE 0R
-PARITY,BYTE 2R
A037 DDCP0R
B036 DDCP2R
B035 *USED
A036 *USED
NOTE: THIS DRAWING IS APPLICABLE TO PWB 19268191 ONLY.
DD1IP0 B032 -HALF BYTE PARITY OUT "SHORT"
DP4IP0 B029 -HALF BYTE PARITY OUT "SHORT"
=1 10107 A10
-BYTE 0 PARITY OUT
A033 DDCDP0
CONTROL DATA CANADA LTD
CPU PARITY IN,OUT
MODULE ASSY:210 PAK
TYPE: 1DD0
C
B
27-MAR-85
SHEET 28A

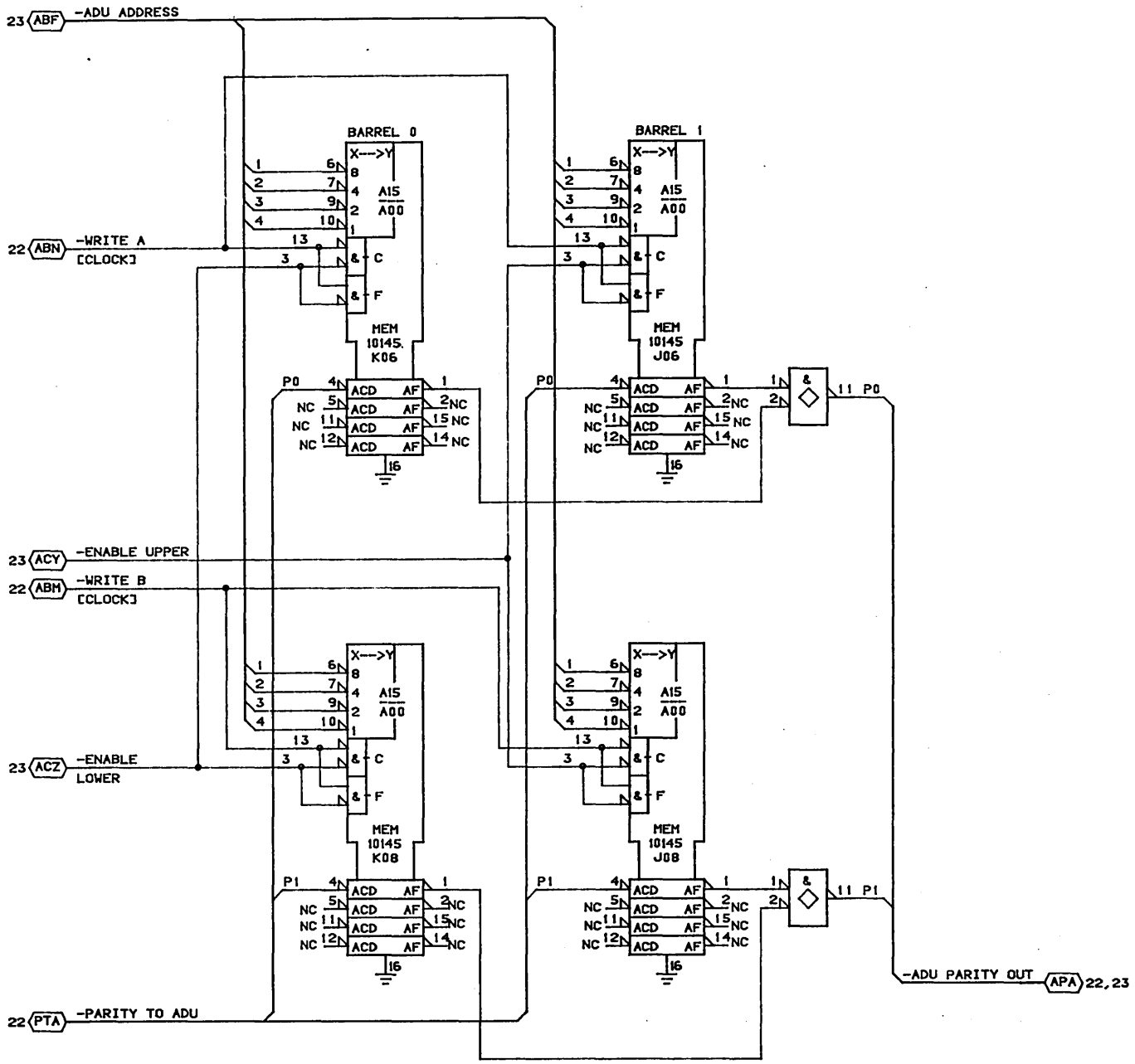

CONTROL DATA CANADA LTD	ADU PARITY P0,P1 MODULE ASSY:210 PAK TYPE: 1DD0		C	--------	B
		28-MAR-85		SHEET 29	INST 01

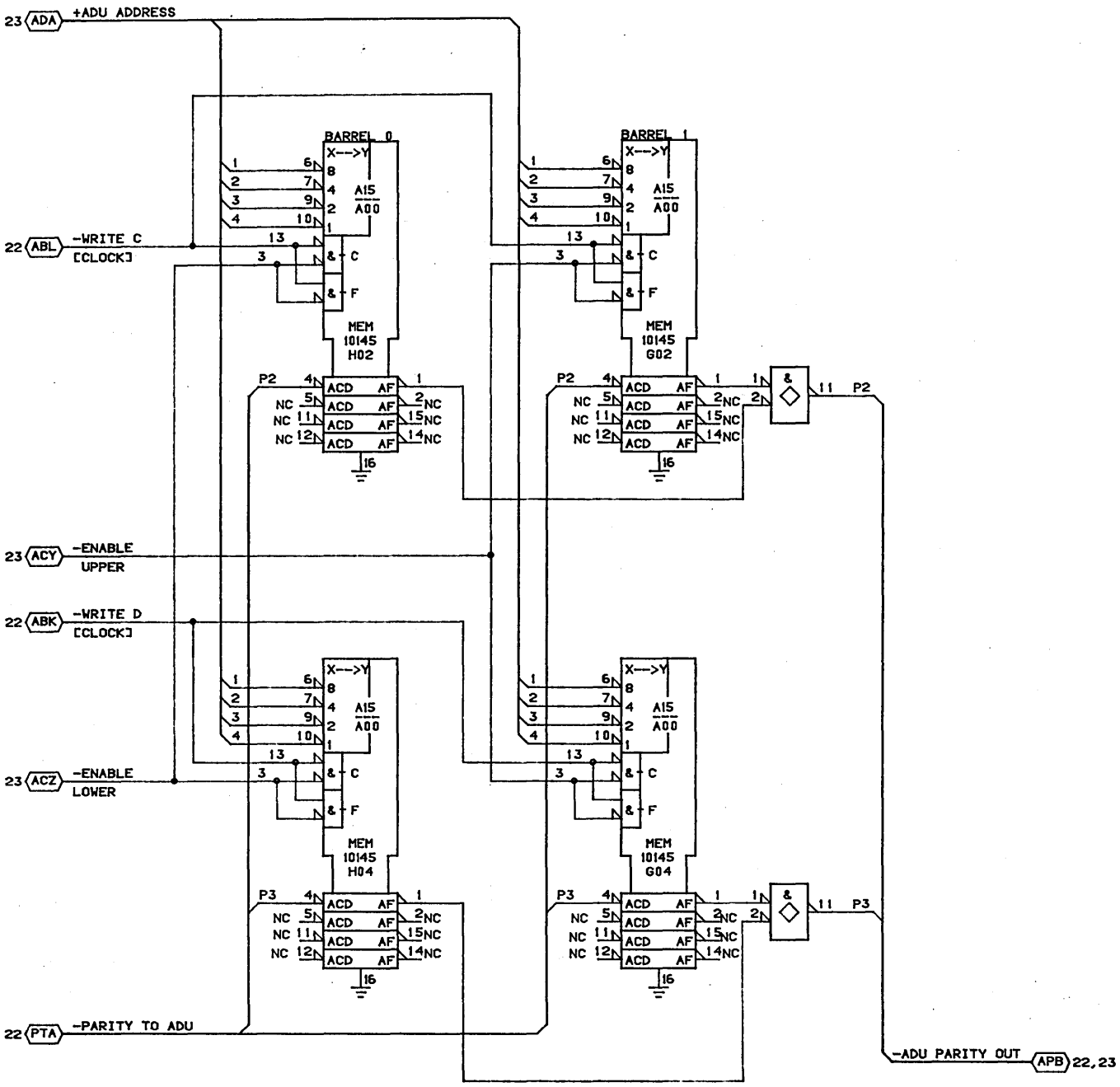

CONTROL DATA CANADA LTD	ADU PARITY P2, P3 TYPE: 1DD0		C		B
		28-MAR-85	SHEET 30	INST 01	

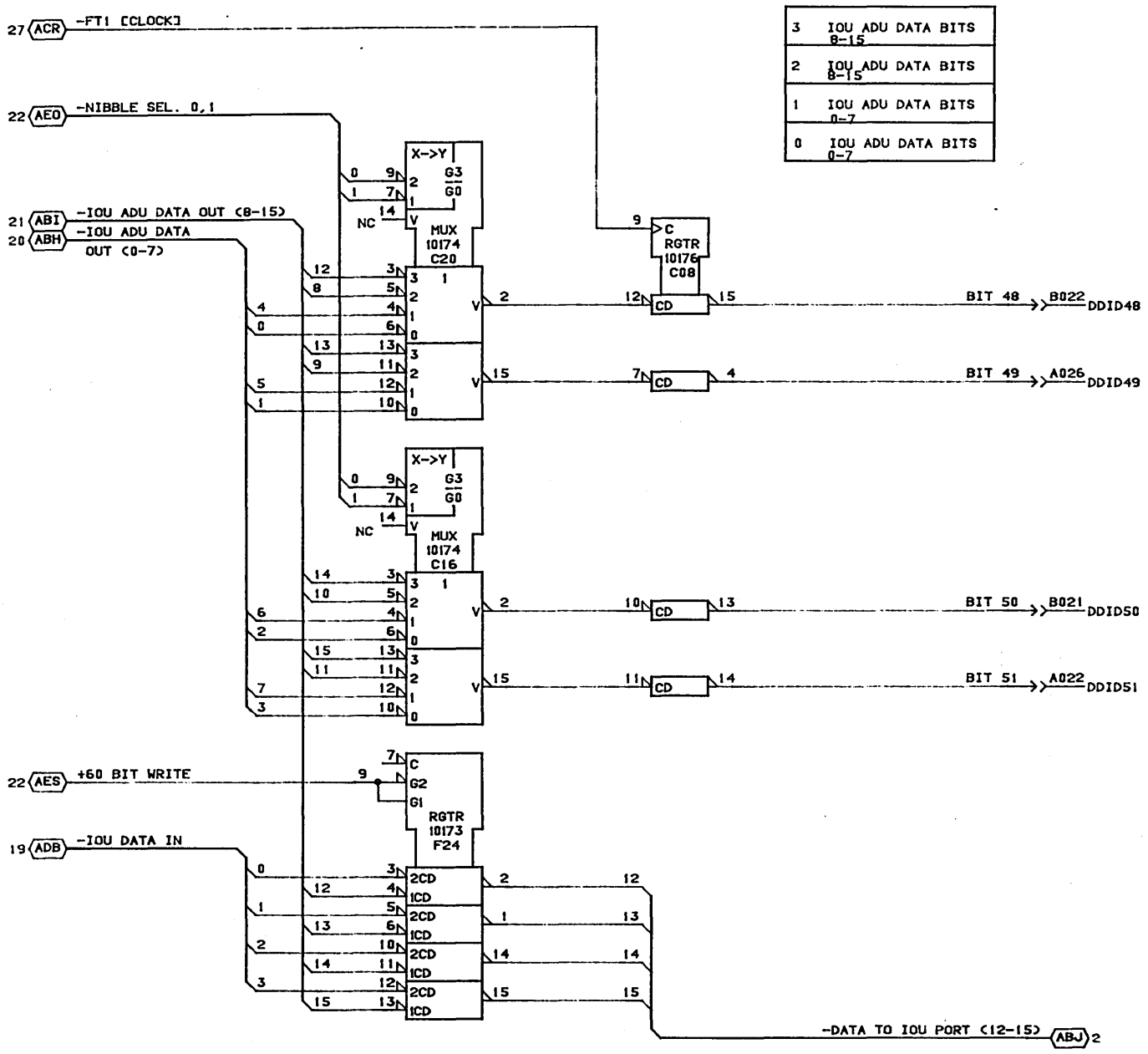

3	IOU ADU DATA BITS 8-15
2	IOU ADU DATA BITS 8-15
1	IOU ADU DATA BITS 0-7
0	IOU ADU DATA BITS 0-7

DATA TO IOU PORT	
1	DATA FROM ADU
0	IOU DATA IN

CONTROL DATA CANADA LTD	IOU PORT REGISTER BITS 48 TO 51 MODULE ASSY:210 PAK TYPE: 1DD0	C		B
		28-MAR-85	SHEET 31	INST 01

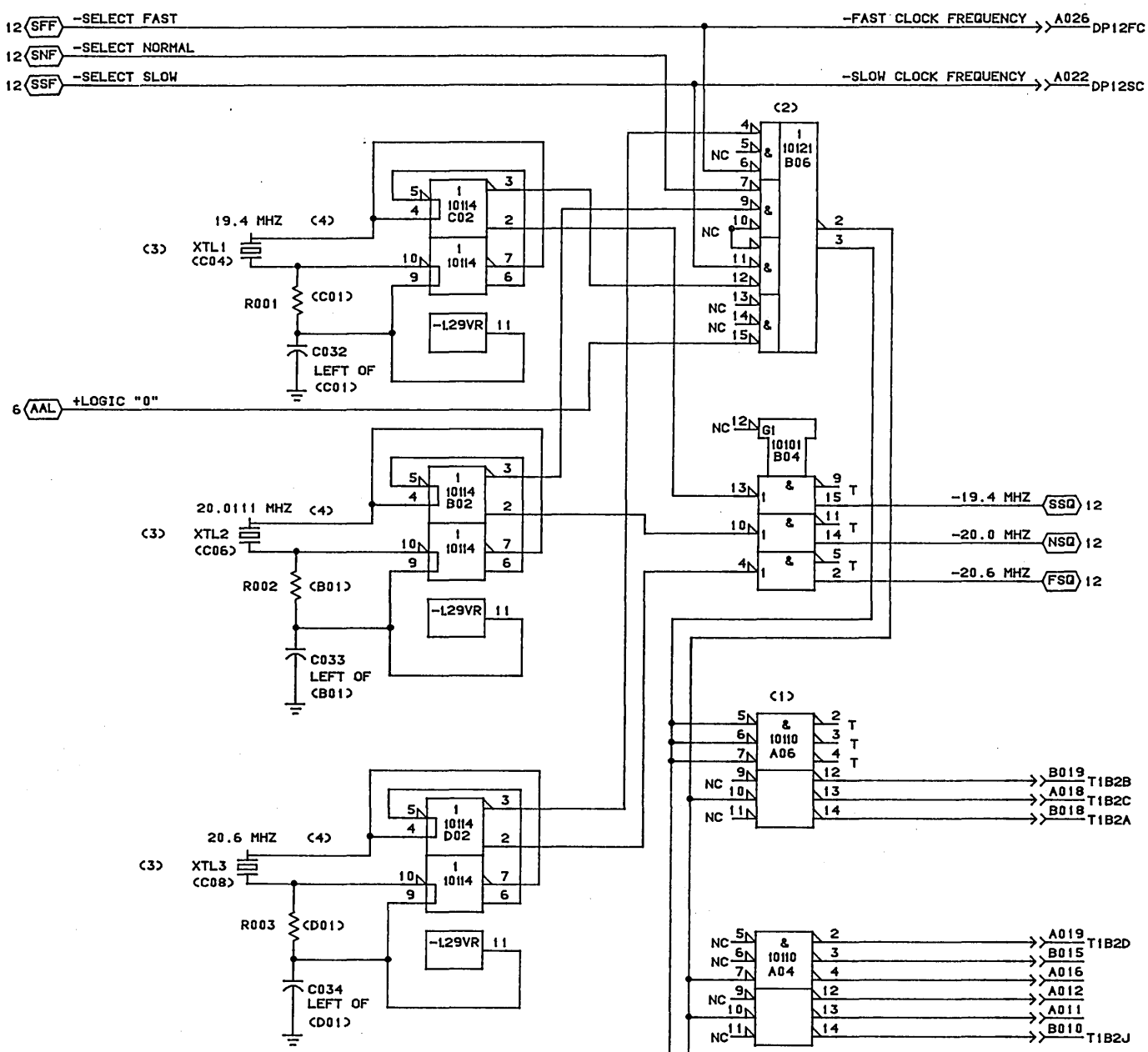

NOTE 1:
10110 SECTIONS MAY NOT BE RE-ARRANGED.

NOTE 2:
TOTAL FOIL LENGTHS FROM 10121 TO CONNECTOR PINS MUST BE THE SAME FOR ALL PATHS.

NOTE 3:
CRYSTALS MUST BE POSITIONED SO THEY CAN LIE FLAT.

NOTE 4:
ALL THREE CRYSTALS MUST BE TERMINATED.

CONTROL DATA CANADA LTD	1DP0 MASTER OSCILLATOR FIRST STAGE FANOUT	C		B
		25-APR-85	SHEET 02	

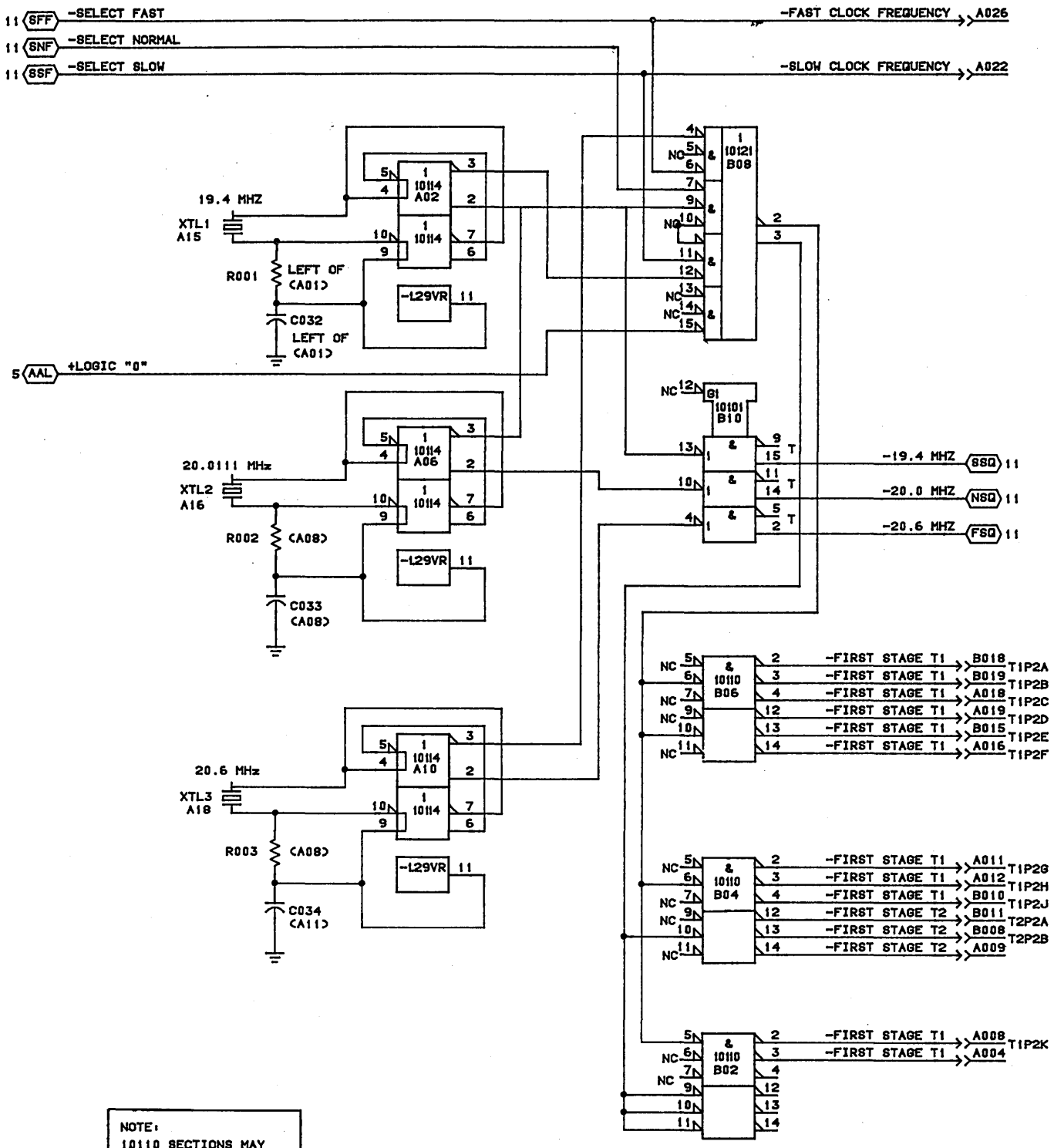

NOTE:
10110 SECTIONS MAY NOT BE RE-ARRANGED.

NOTE: TOTAL FOIL LENGTHS FROM 10121 TO CONNECTOR PINS MUST BE THE SAME FOR ALL PATHS.

NOTE: THIS DRAWING IS APPLICABLE TO PWB 19268192.

CONTROL DATA CANADA LTD	1DP0 MASTER OSCILLATOR FIRST STAGE FANOUT	C		B
		25-APR-85	SHEET 02A	

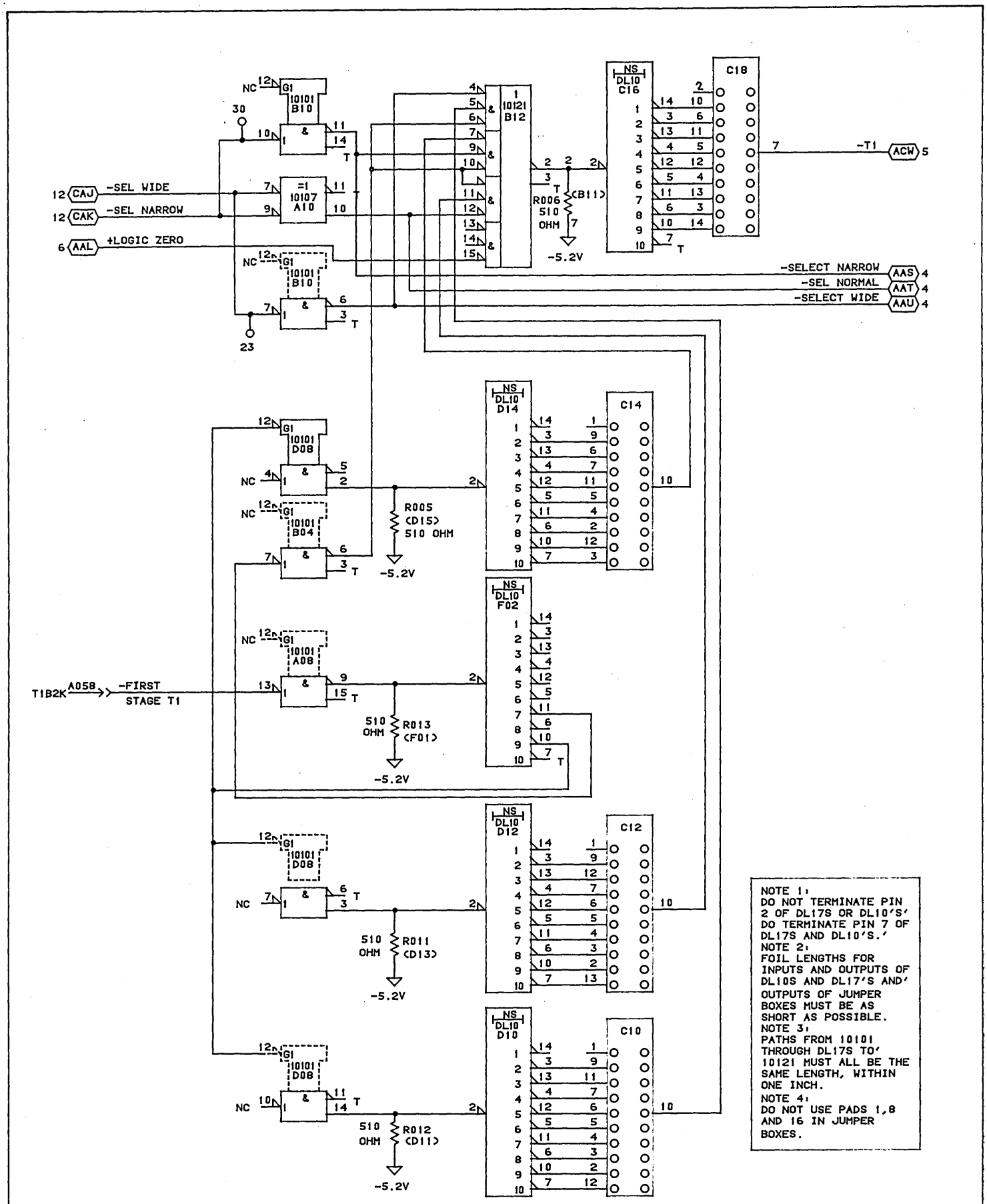

NOTE 1:
DO NOT TERMINATE PIN 2 OF DL17S OR DL10'S'
DO TERMINATE PIN 7 OF DL17S AND DL10'S.'
NOTE 2:
FOIL LENGTHS FOR INPUTS AND OUTPUTS OF DL10S AND DL17'S AND' OUTPUTS OF JUMPER BOXES MUST BE AS SHORT AS POSSIBLE.
NOTE 3:
PATHS FROM 10101 THROUGH DL17S TO' 10121 MUST ALL BE THE SAME LENGTH, WITHIN ONE INCH.
NOTE 4:
DO NOT USE PADS 1,8 AND 16 IN JUMPER BOXES.

CONTROL DATA CANADA LTD	1DP0 T1 2ND STAGE TUNNING AND FANOUT TO CMC	C		B
		24-APR-85	SHEET 03	

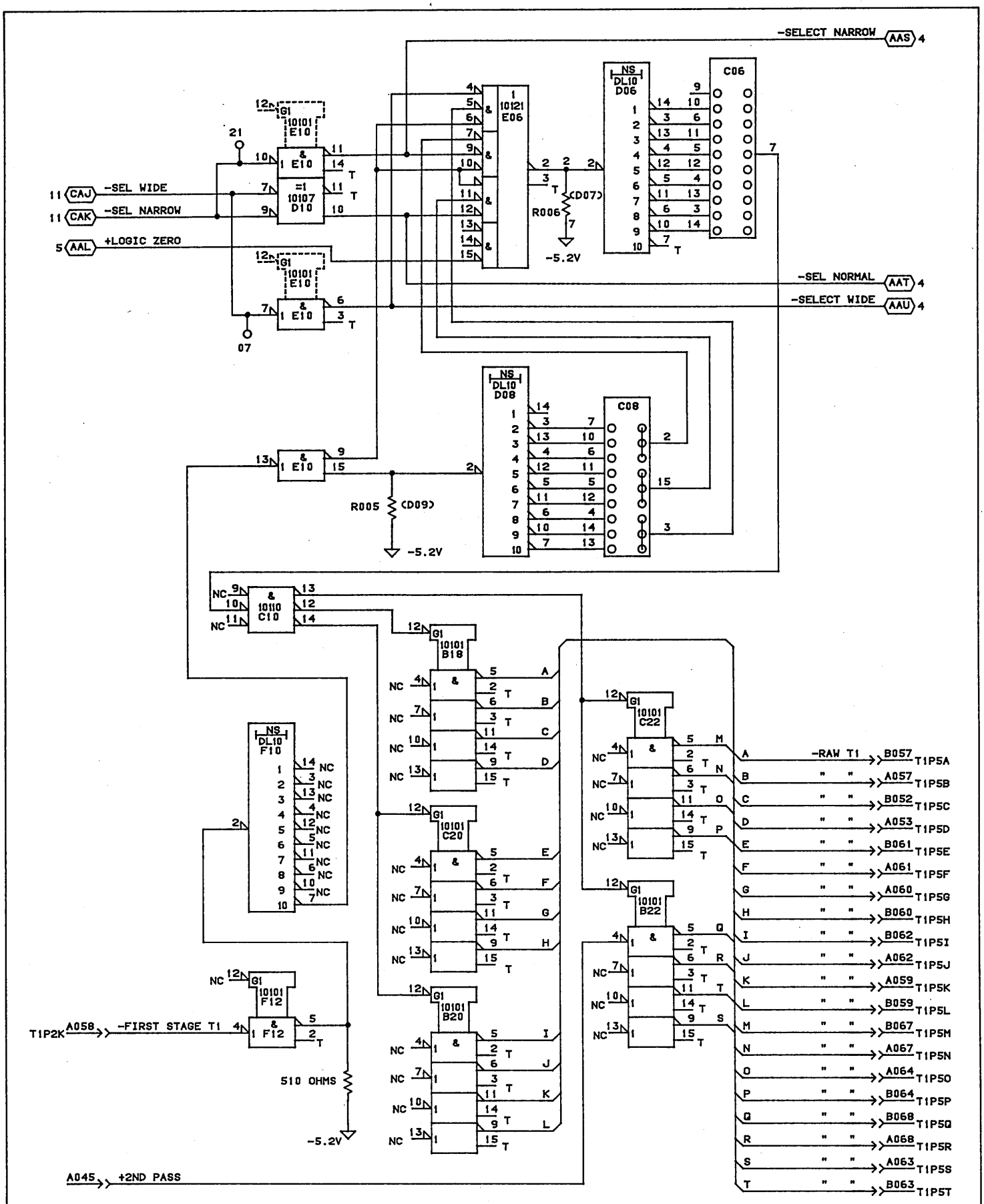

NOTE: THIS DRAWING IS APPLICABLE TO PWB 19268192.

CONTROL DATA CANADA LTD	1DP0 T1 2ND STAGE TUNNING AND FANOUT TO CMC	C		B
		25-APR-85	SHEET 03A	

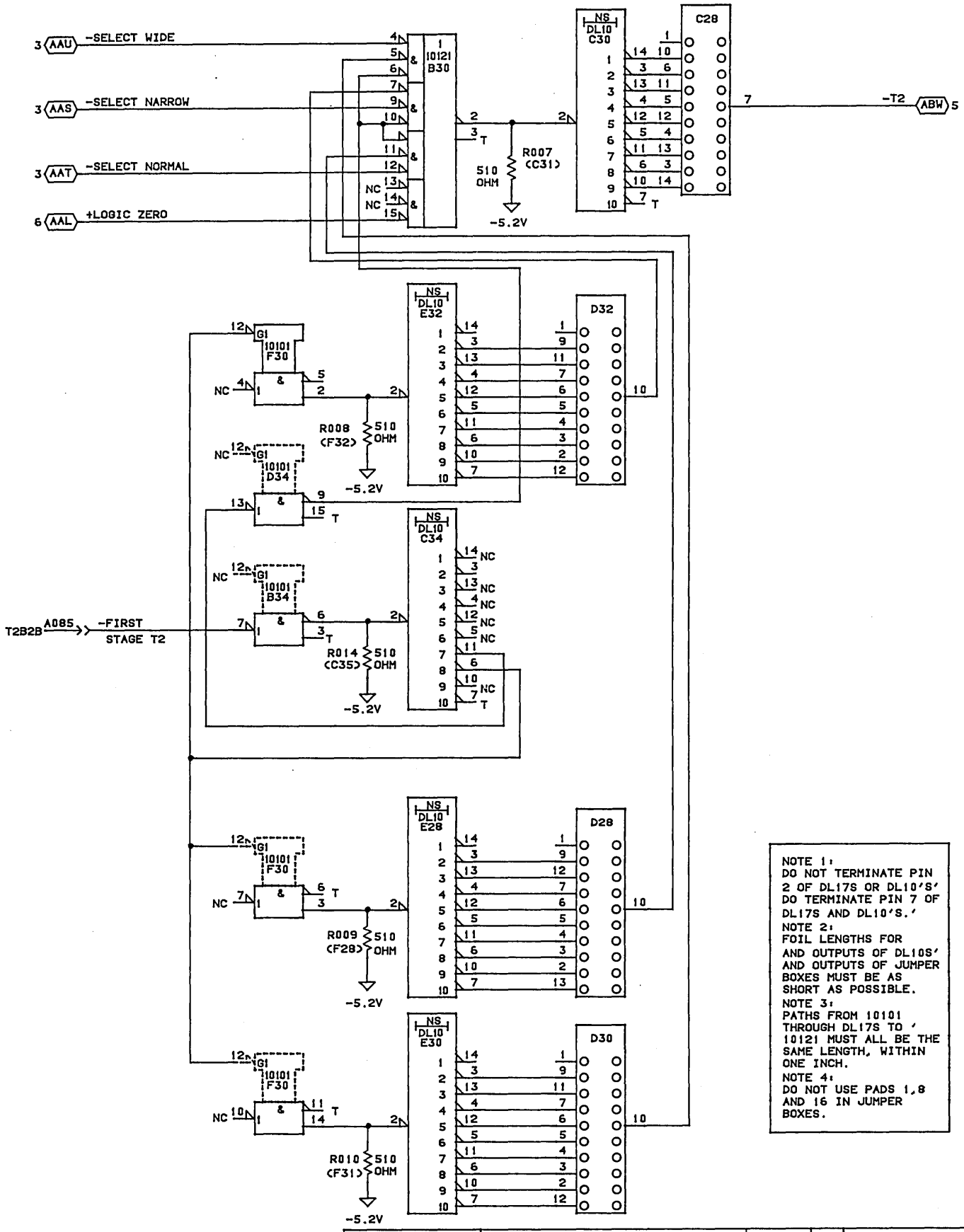

NOTE 1:
DO NOT TERMINATE PIN 2 OF DL17S OR DL10'S' DO TERMINATE PIN 7 OF DL17S AND DL10'S.'
NOTE 2:
FOIL LENGTHS FOR AND OUTPUTS OF DL10S' AND OUTPUTS OF JUMPER BOXES MUST BE AS SHORT AS POSSIBLE.
NOTE 3:
PATHS FROM 10101 THROUGH DL17S TO ' 10121 MUST ALL BE THE SAME LENGTH, WITHIN ONE INCH.
NOTE 4:
DO NOT USE PADS 1,8 AND 16 IN JUMPER BOXES.

CONTROL DATA CANADA LTD	1DP0 T2 2ND TUNING AND FANOUT TO CMC	C		B
		24-APR-85	SHEET 04	

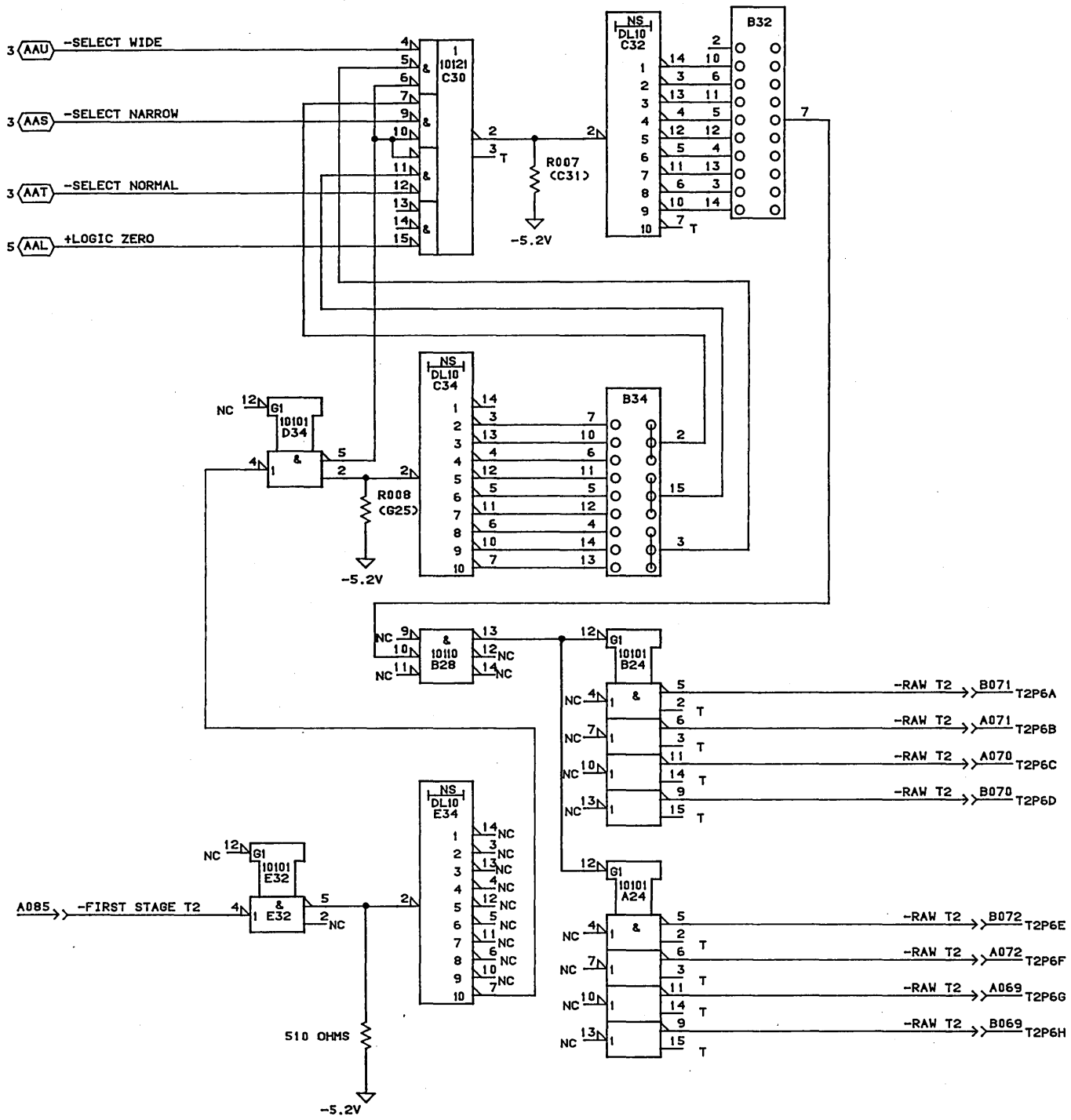

NOTE: THIS DRAWING IS APPLICABLE TO PWB 19268192.

CONTROL DATA CANADA LTD	1DP0 T2 2ND TUNING AND FANOUT TO CMC	C		B
		25-APR-85	SHEET 04A	

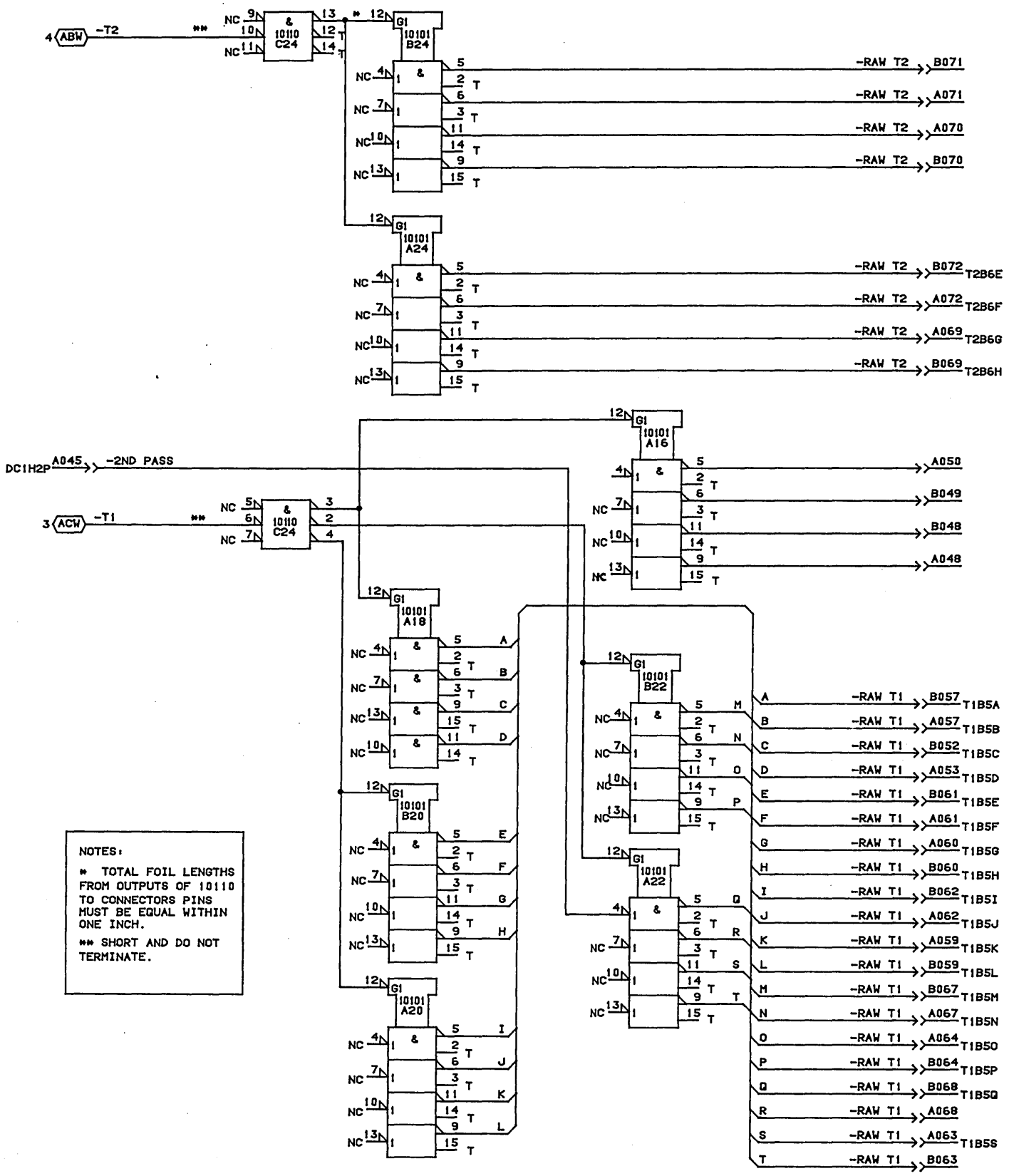

NOTES:

* TOTAL FOIL LENGTHS FROM OUTPUTS OF 10110 TO CONNECTORS PINS MUST BE EQUAL WITHIN ONE INCH.

** SHORT AND DO NOT TERMINATE.

CONTROL DATA CANADA LTD	1DP0 T1 2ND STAGE TUNING AND FANOUT TO CMC	C		B
		24-APR-85	SHEET 05	

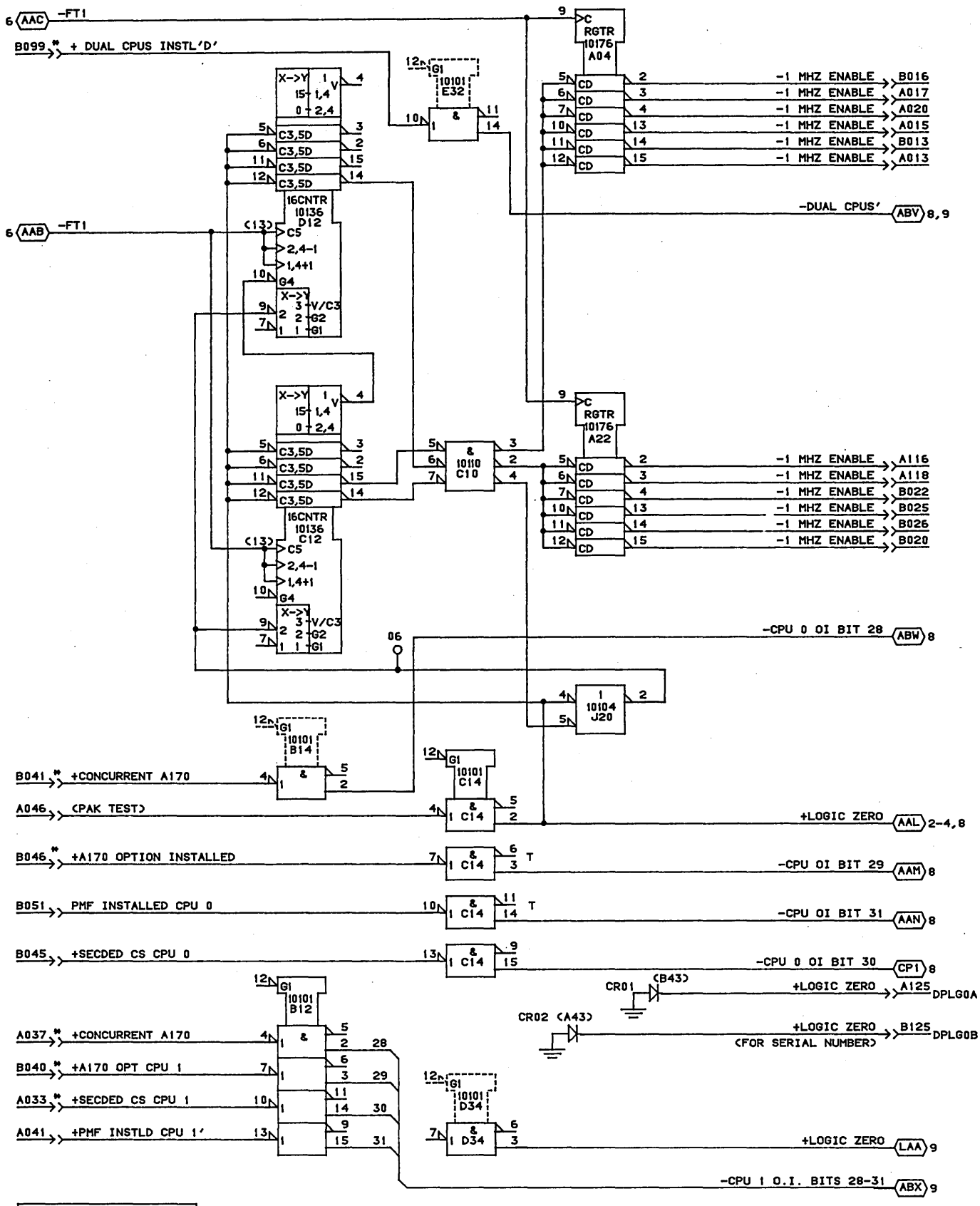

* DO NOT TERMINATE

NOTE: THIS DRAWING IS APPLICABLE TO PWB 19268192

CONTROL DATA CANADA LTD	1DP0 1 MHz CLOCK ENABLE CPU OPTION INSTALLED	C	--------	B
		25-APR-85	SHEET 05A	

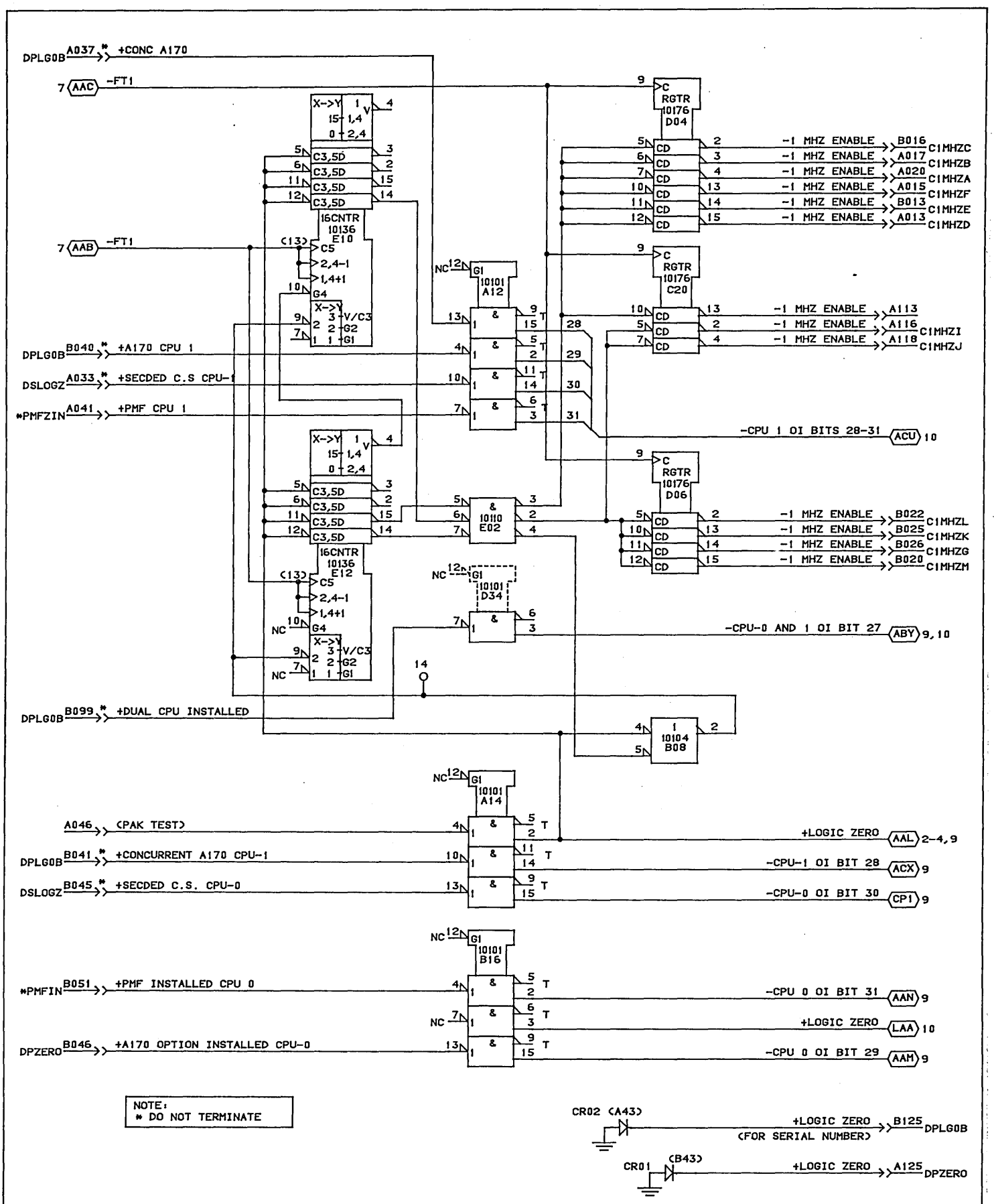

CONTROL DATA CANADA LTD	1DP0 1 MHz CLOCK ENABLE CPU OPTION INSTALLED	C		B
		24-APR-85	SHEET 06	

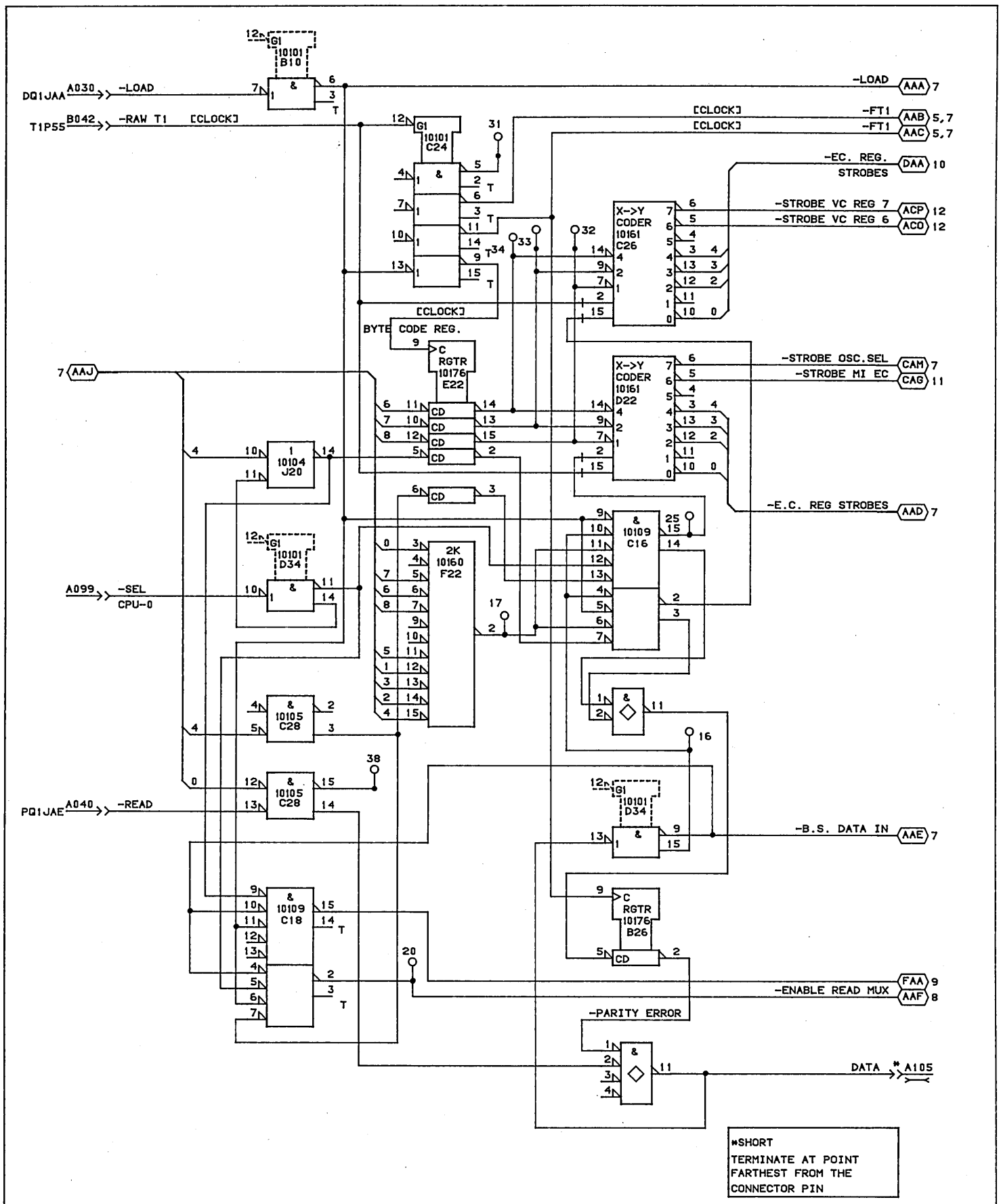

NOTE: THIS DRAWING IS APPLICABLE TO PWB 19268192.

CONTROL DATA CANADA LTD	1DP0 BIT SERIAL MAC INTERFACE	C		B
		25-APR-85	SHEET 06A	

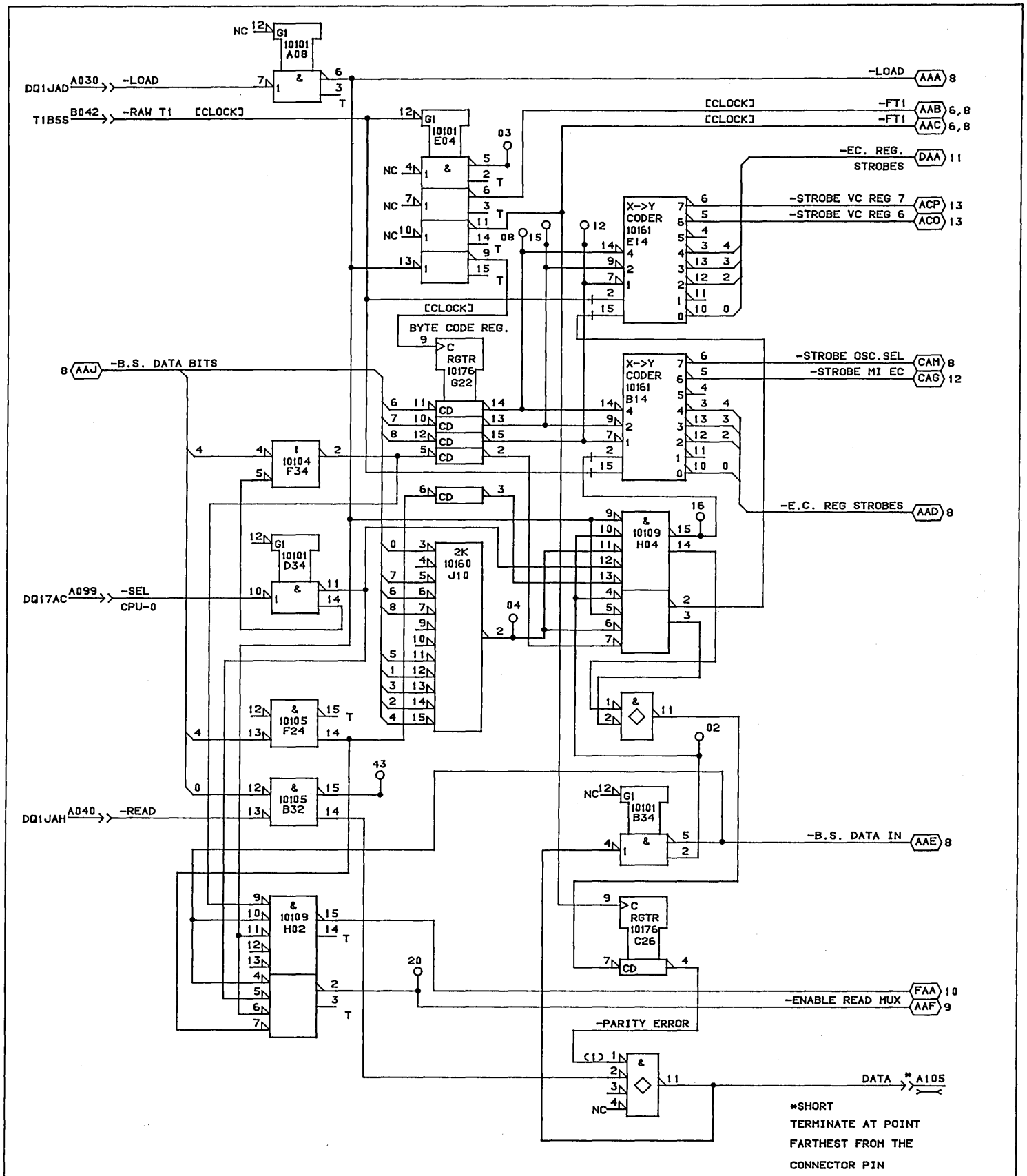

CONTROL DATA CANADA LTD	IDP0 BIT SERIAL MAC INTERFACE	C		B
		25-APR-85	SHEET 07	

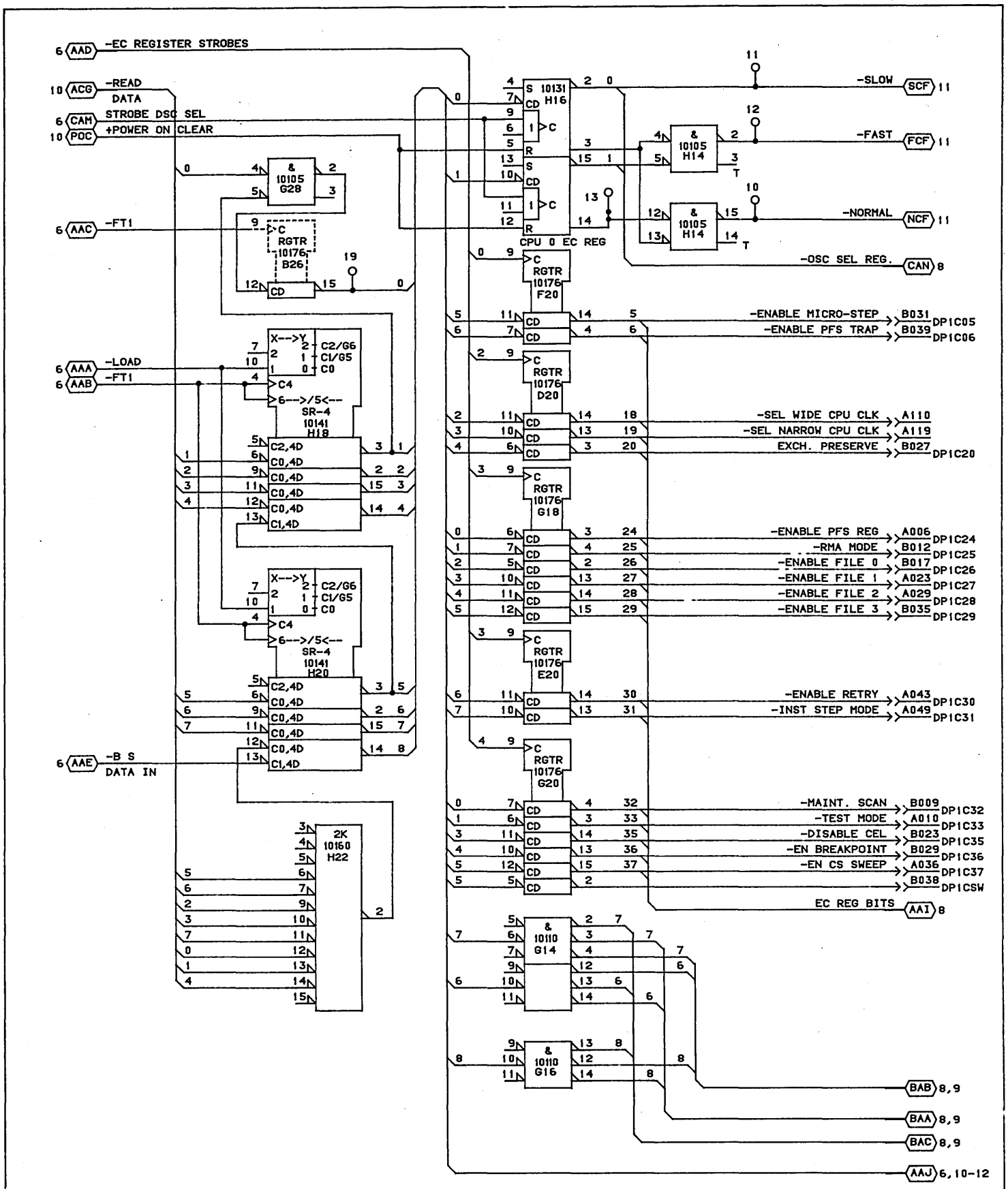

NOTE: THIS DRAWING IS APPLICABLE TO PWB 19268192.

CONTROL DATA CANADA LTD	1DP0 BIT-SERIAL SHIFT REG. CPU 0 EC REGISTER	C		B
		25-APR-85	SHEET 07A	

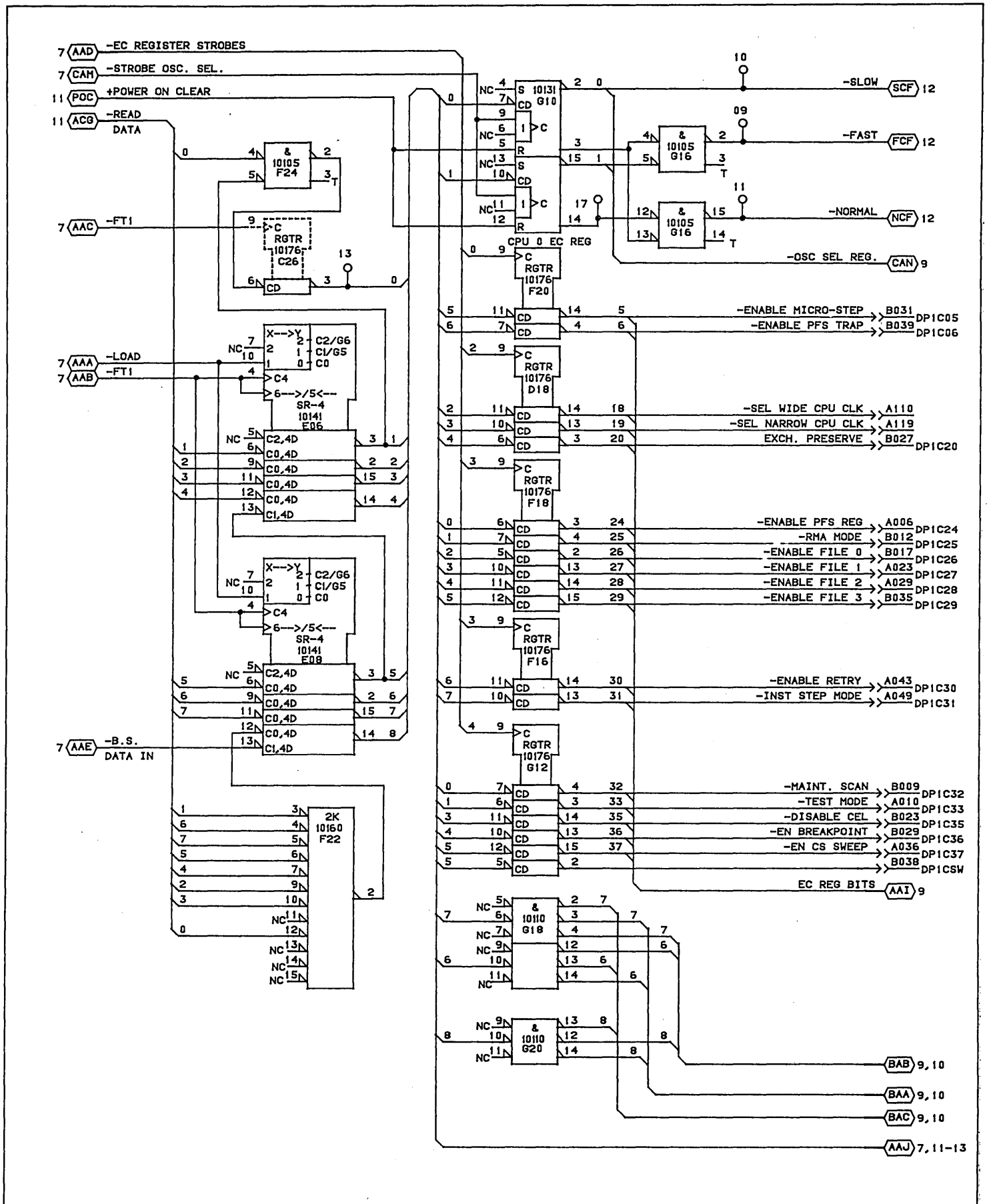

CONTROL DATA CANADA LTD	1DP0 BIT-SERIAL SHIFT REG. CPU 0 EC REGISTER	C		B
		24-APR-85	SHEET 08	

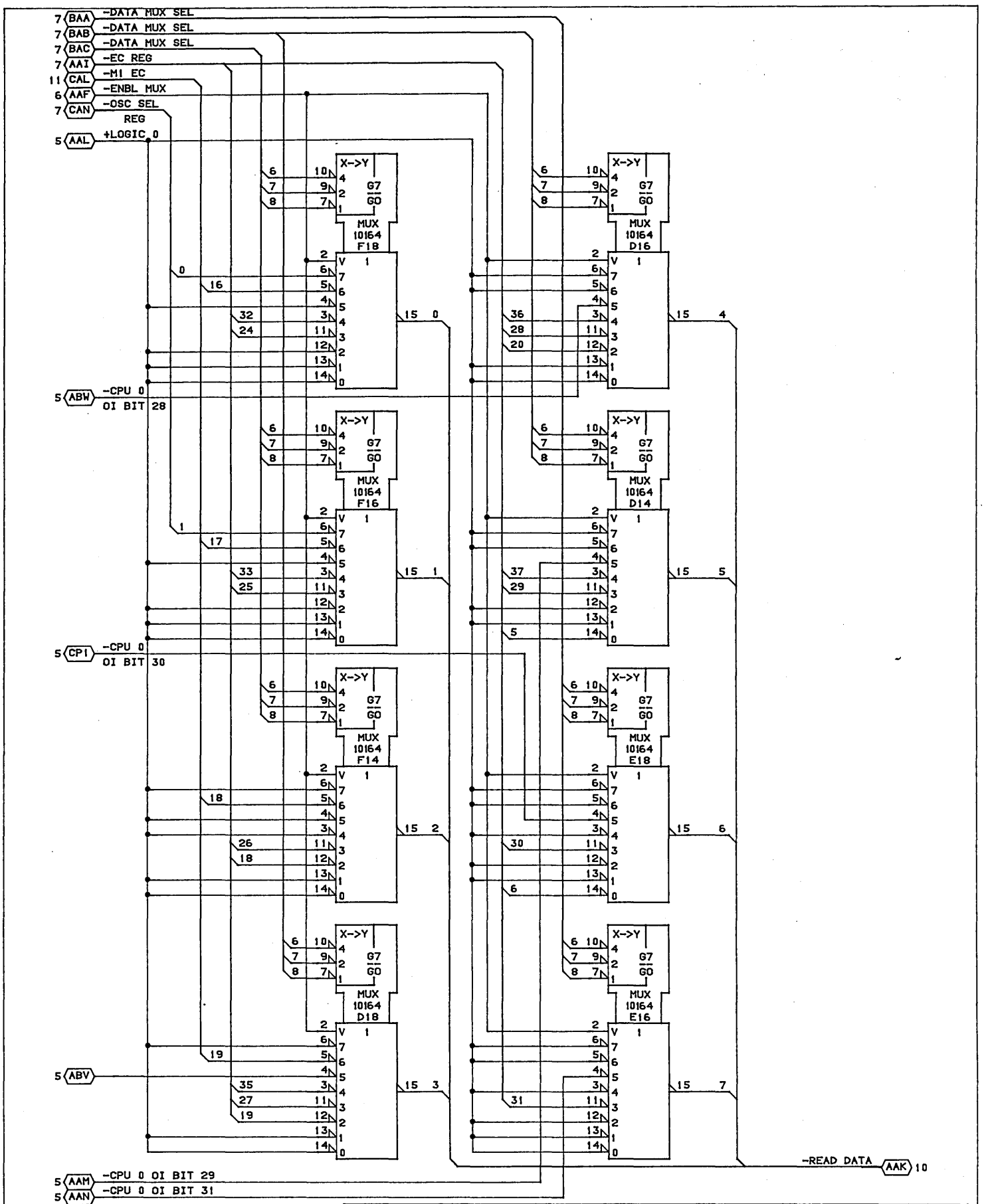

NOTE: THIS DRAWING IS APPLICABLE TO PWB 19268192.

CONTROL DATA CANADA LTD	1DP0 MAC READ MUX	C		B
		26-APR-85	SHEET 08A	

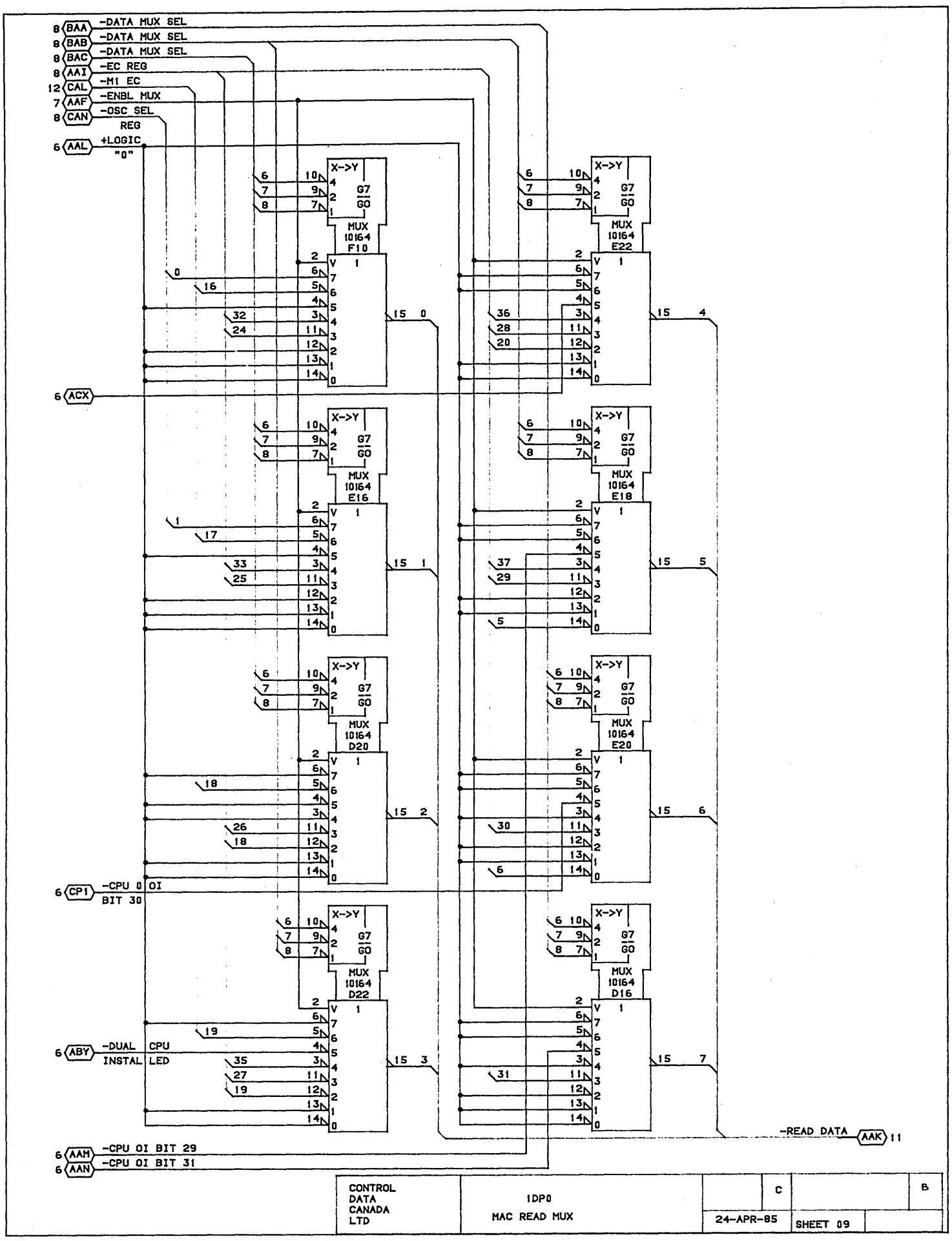

CONTROL DATA CANADA LTD	1DP0 MAC READ MUX	C		B
		24-APR-85	SHEET 09	

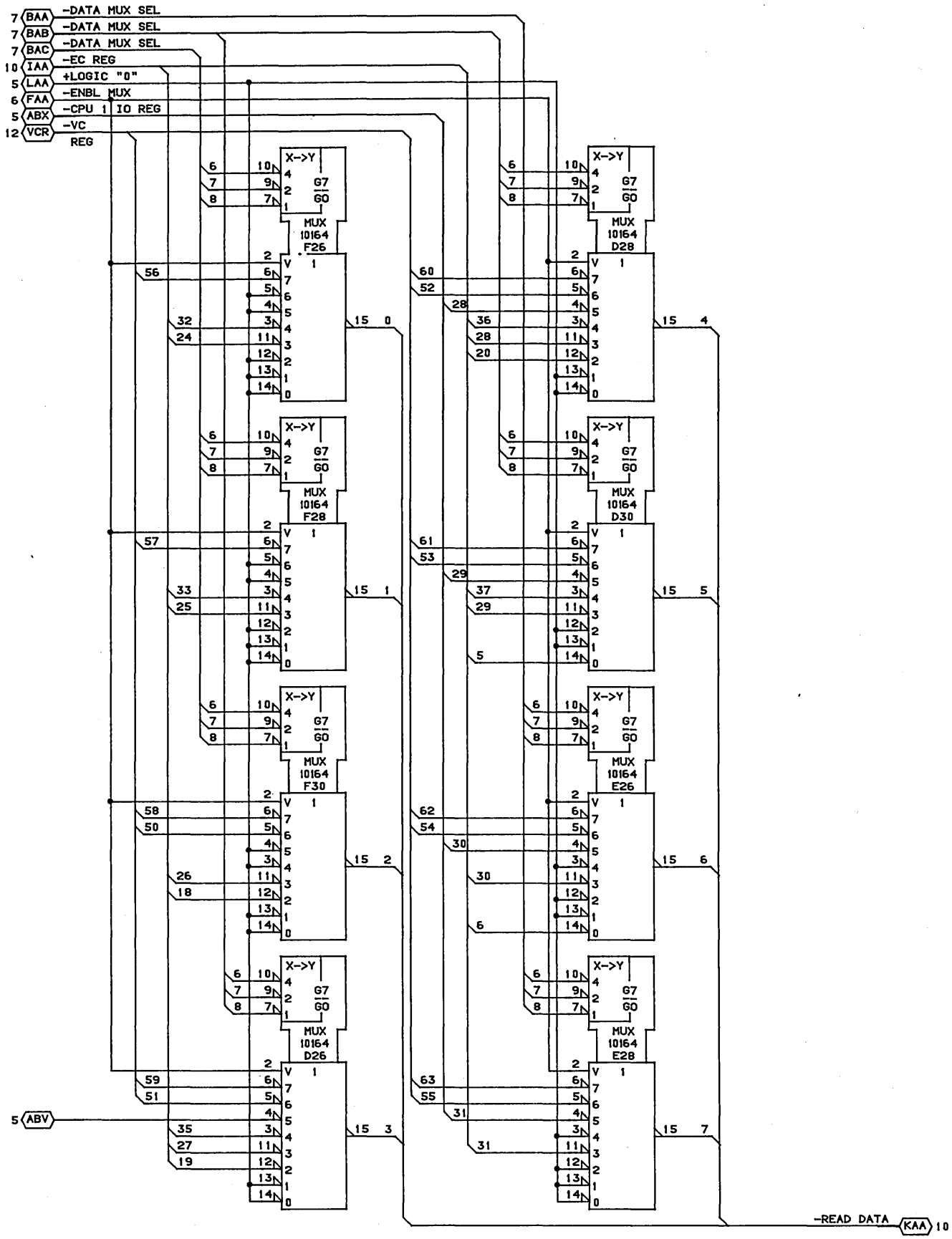

NOTE: THIS DRAWING IS APPLICABLE TO PWB 19268192.

CONTROL DATA CANADA LTD	1DP0 MAC READ MUX CPU-1 EC REG,OI,VC REG	C		B
		26-APR-85	SHEET 09A	

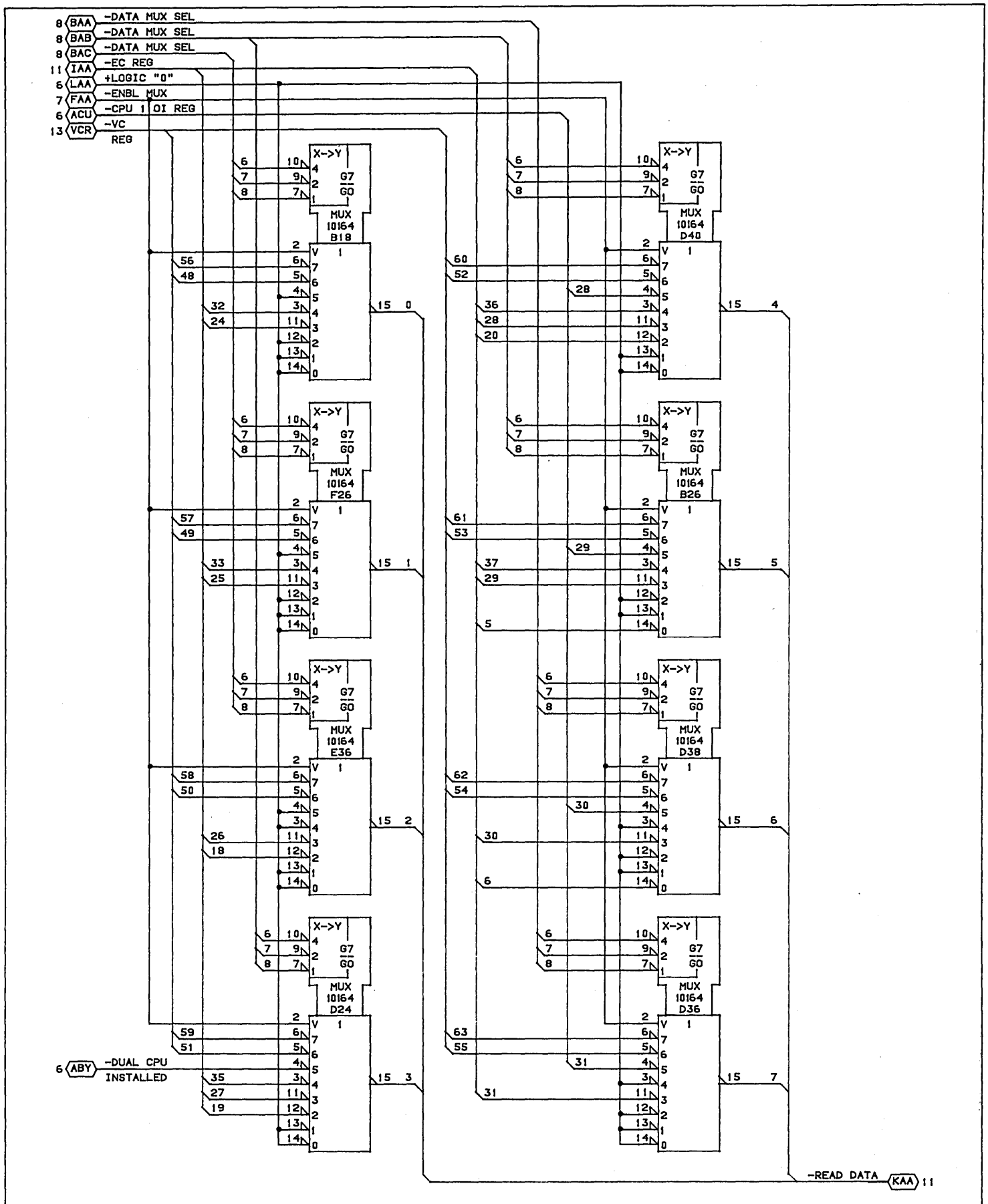

CONTROL DATA CANADA LTD	1DP0 MAC READ MUX CPU-1 EC REG,OI,VC REG	C		B
		24-APR-85	SHEET 10	

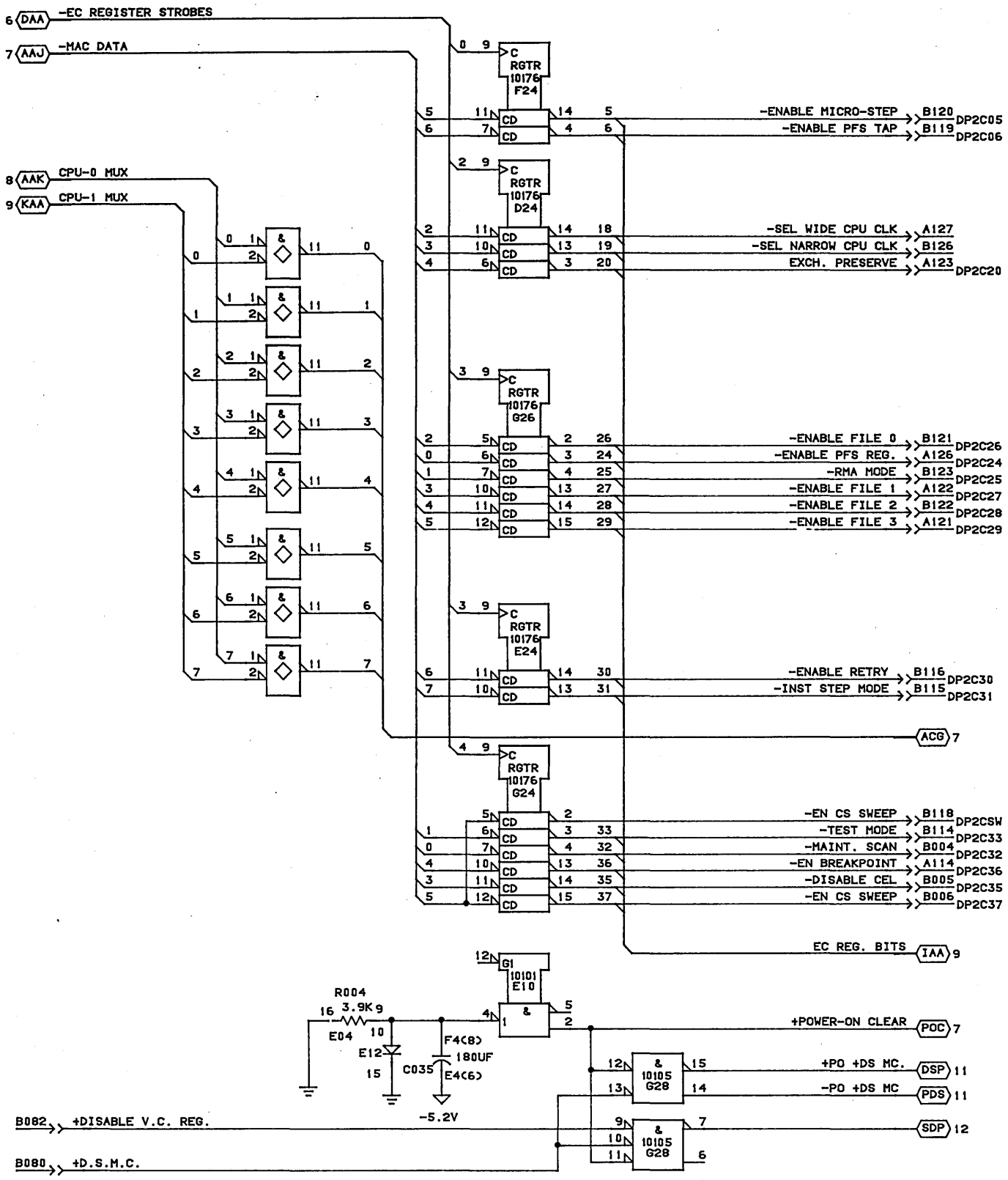

NOTE: THIS DRAWING IS APPLICABLE TO PWB 19268192.

CONTROL DATA CANADA LTD	1DP0 BIT-SERIAL SHIFT REG. CPU EC REGISTER	C	--------	B
		26-APR-85	SHEET 10A	

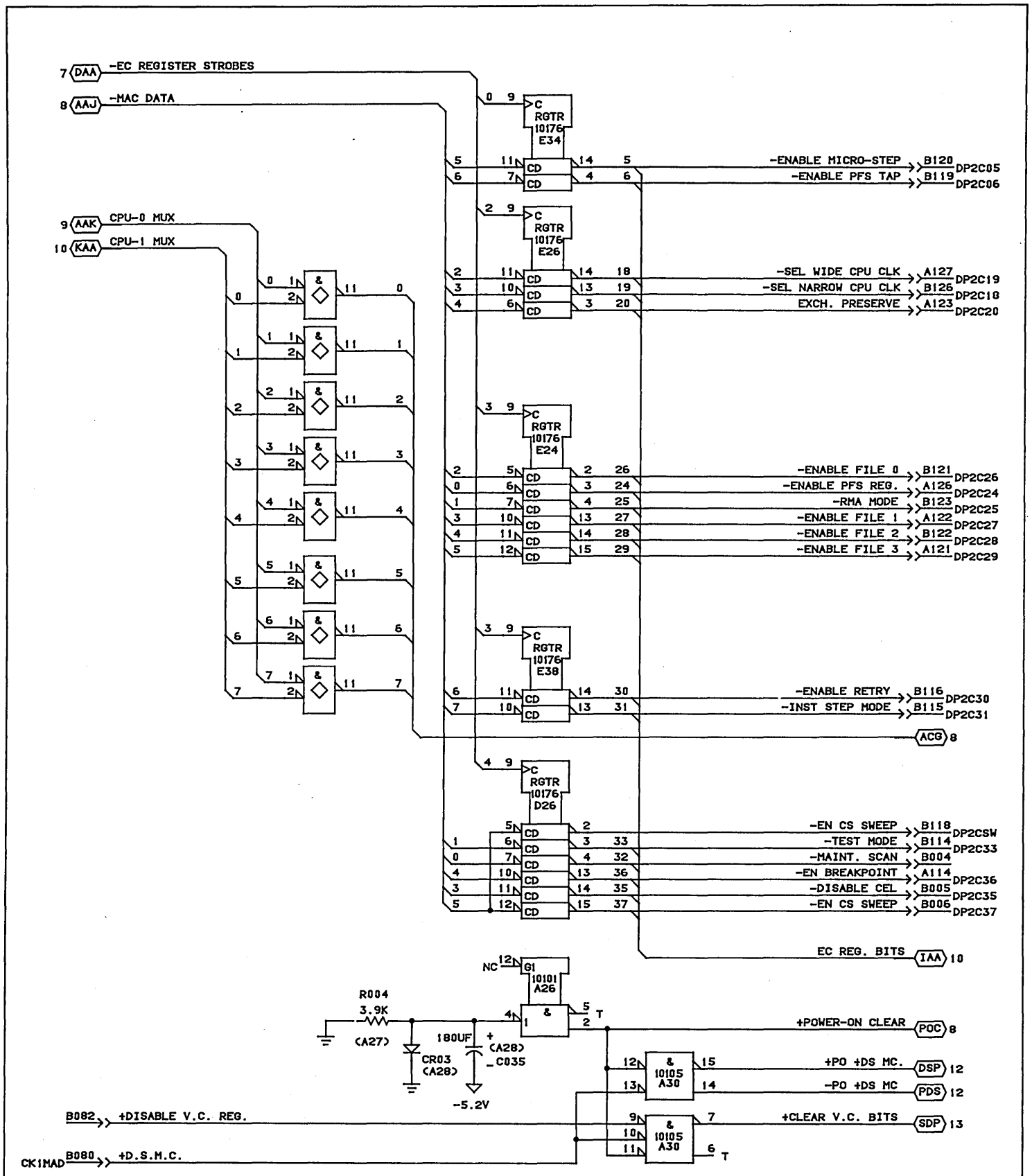

CONTROL DATA CANADA LTD	1DP0 BIT-SERIAL SHIFT REG. CPU EC REGISTER	C		B
		24-APR-85	SHEET 11	

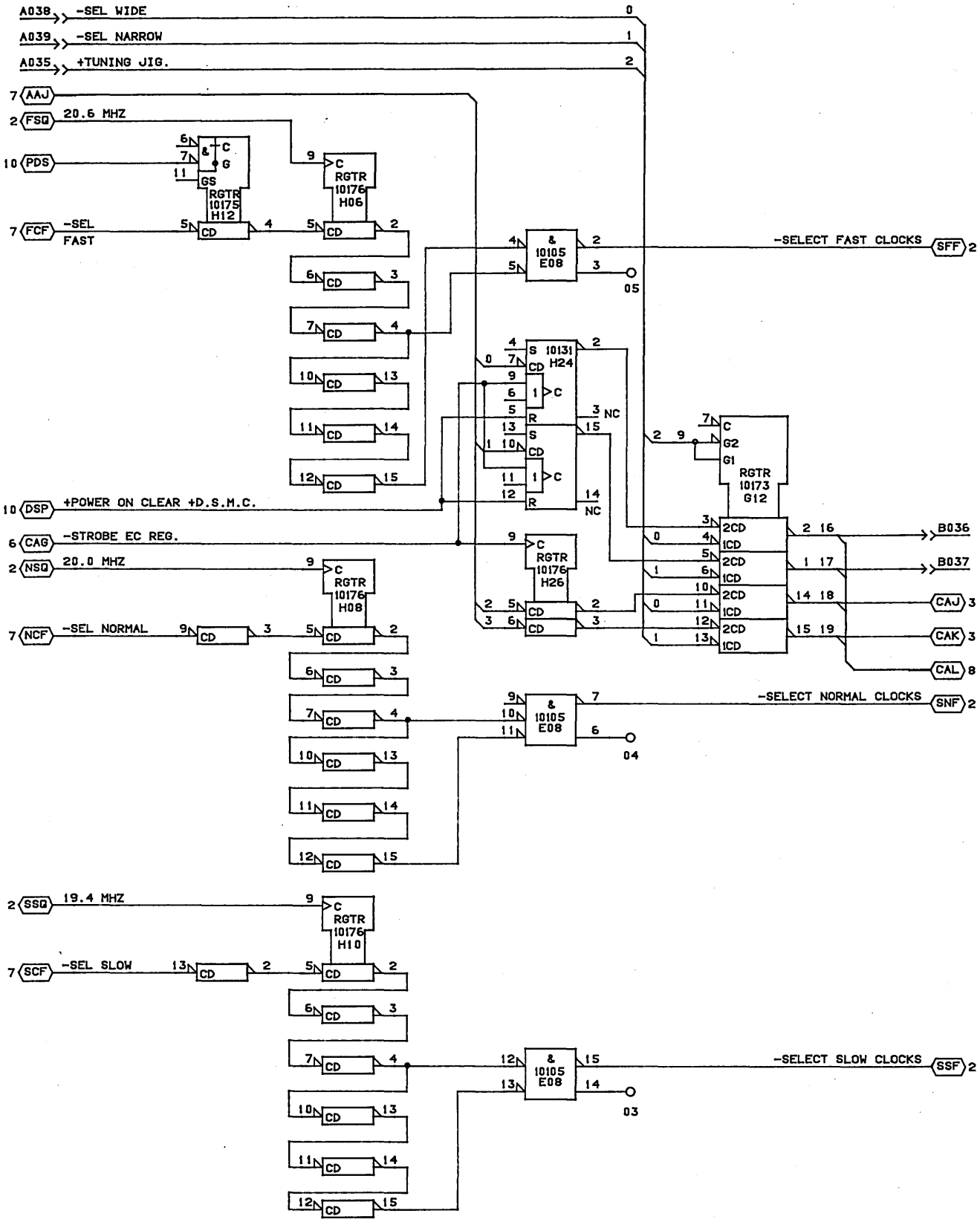

NOTE: THIS DRAWING IS APPLICABLE TO PWB 19268192.

CONTROL DATA CANADA LTD	1DP0 CLOCK FREQUENCY SELECT	C		B
		26-APR-85	SHEET 11A	

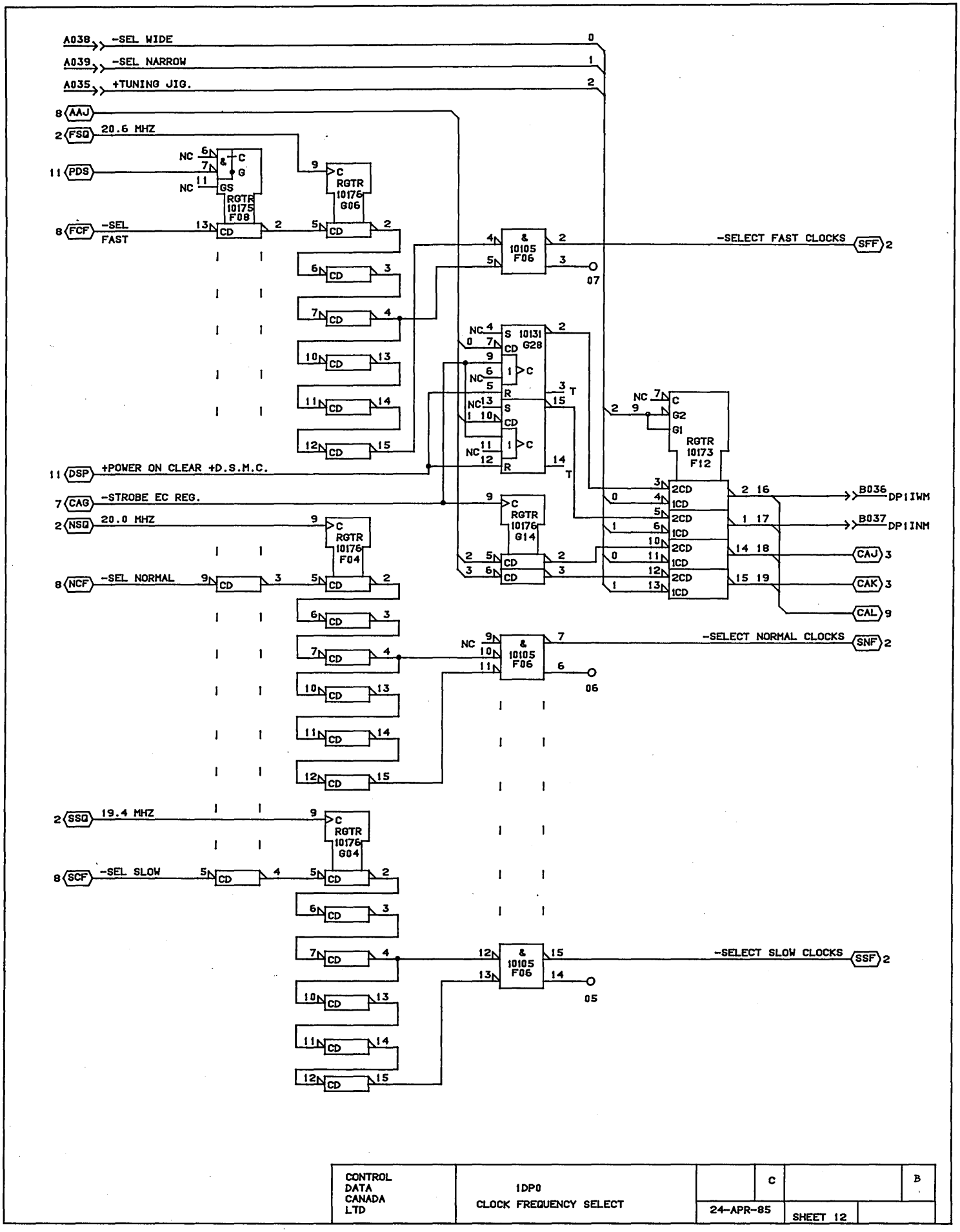

CONTROL DATA CANADA LTD	1DP0 CLOCK FREQUENCY SELECT	C		B
		24-APR-85	SHEET 12	

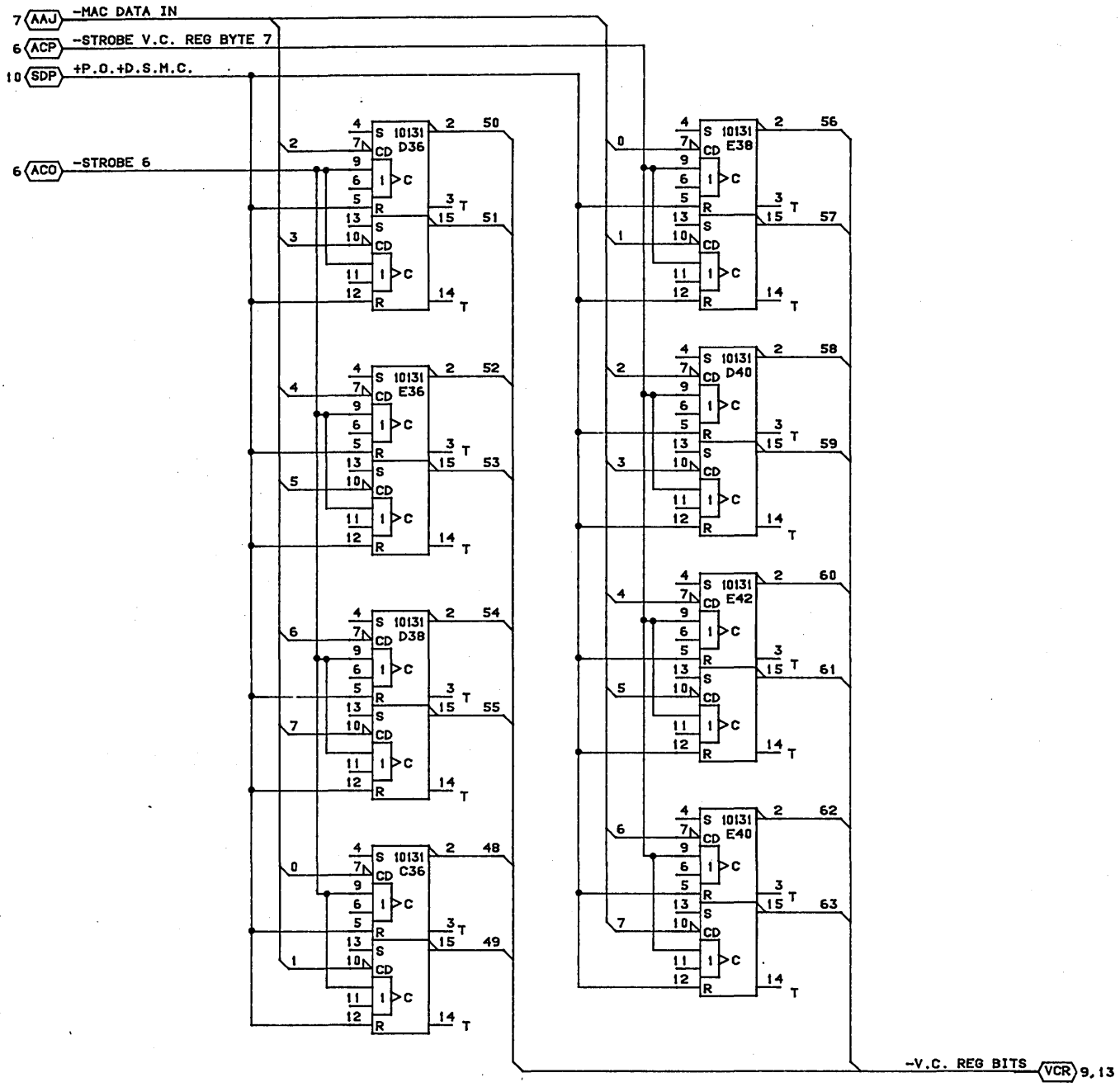

NOTE: THIS DRAWING IS APPLICABLE TO PWB 19268192.

CONTROL DATA CANADA LTD	1DP0 VOLTAGE MARGIN CONTROL REGISTER	C		B
		26-APR-85	SHEET 12A	

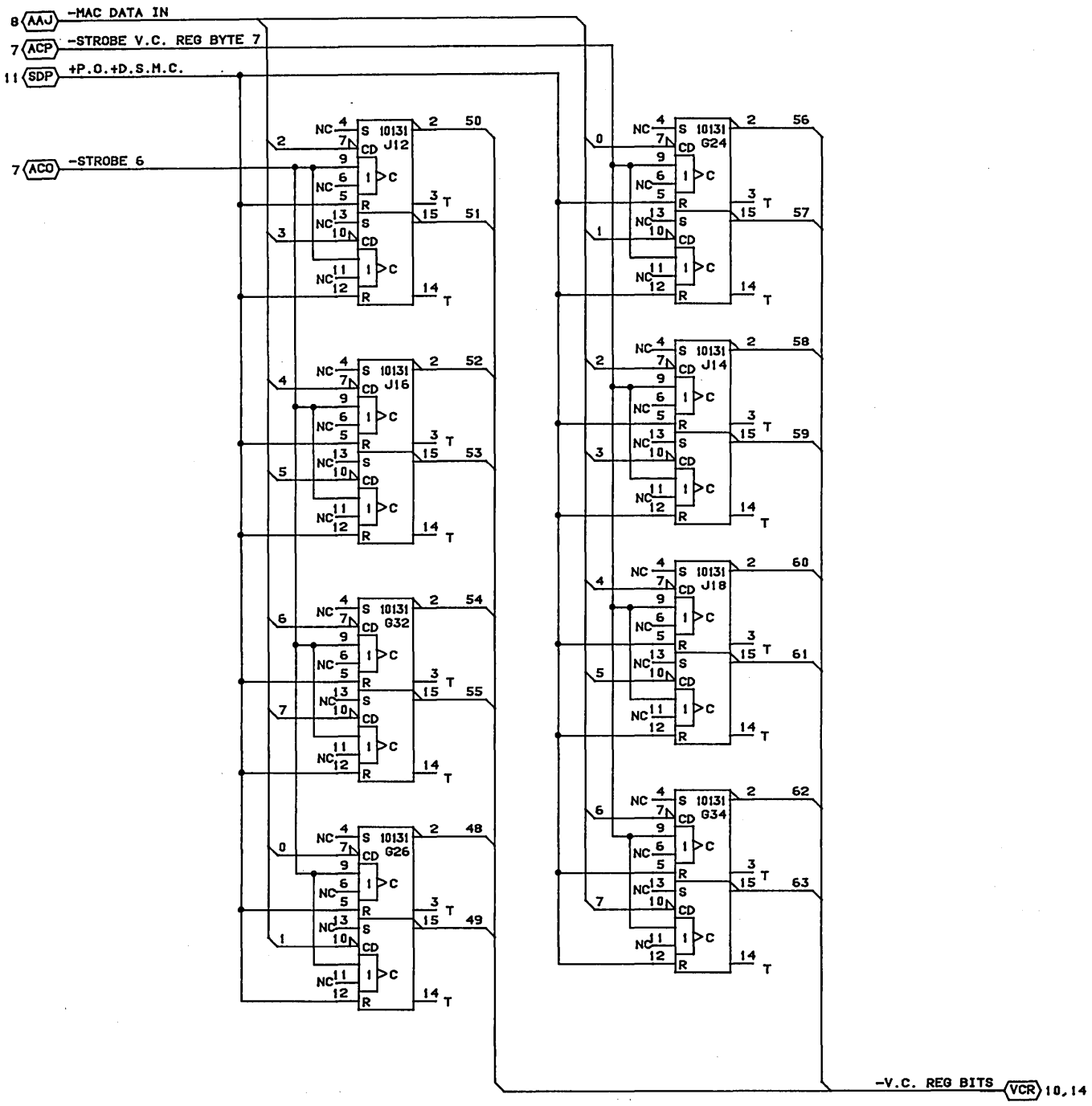

CONTROL DATA CANADA LTD	1DP0 VOLTAGE MARGIN CONTROL REGISTER	C		B
		24-APR-85	SHEET 13	

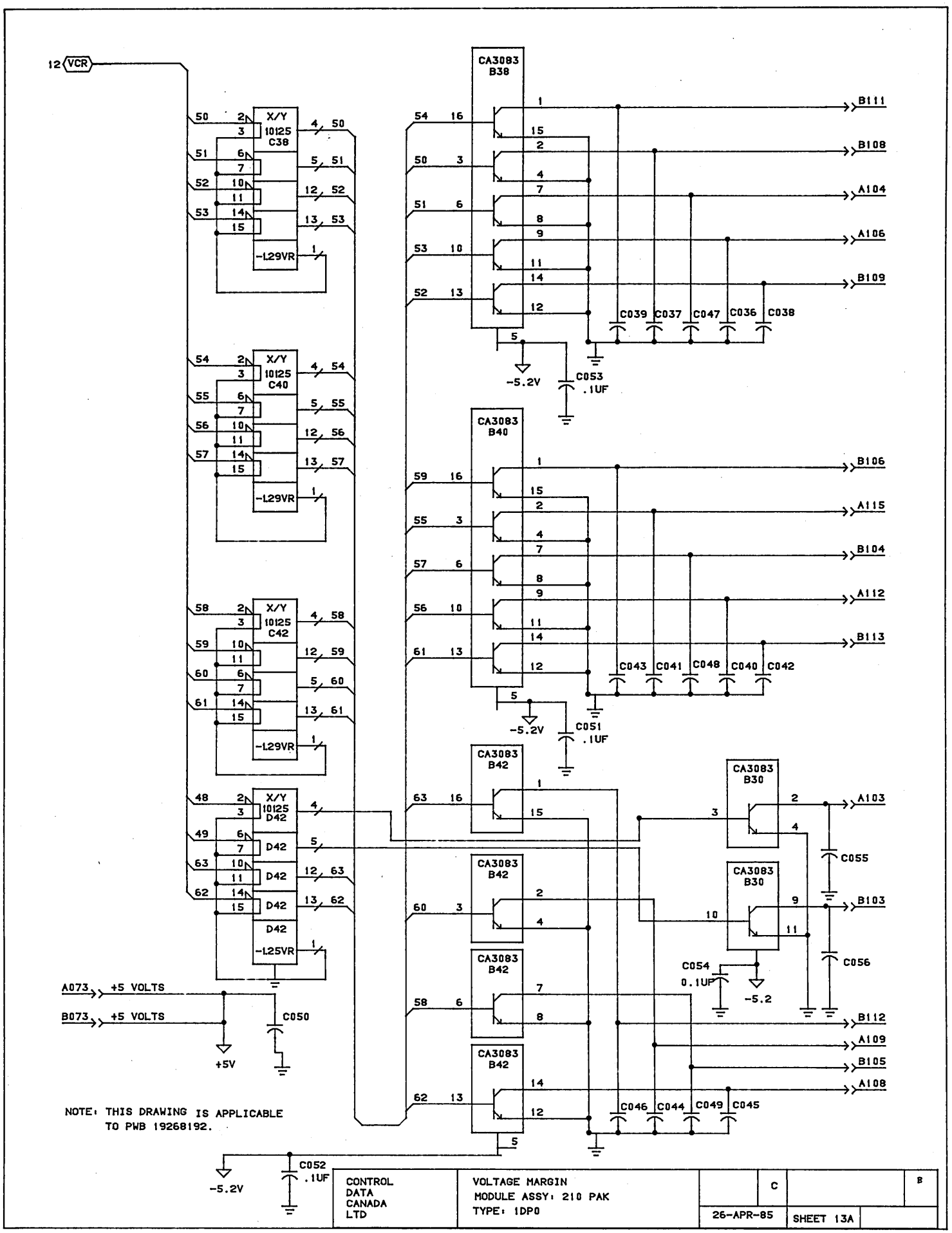
12 VCR
X/Y 10125 C38
X/Y 10125 C40
X/Y 10125 C42
X/Y 10125 D42
-1.29VR
-1.25VR
CA3083 B38
CA3083 B40
CA3083 B42
CA3083 B30
B111
B108
A104
A106
B109
B106
A115
B104
A112
B113
A103
B103
B112
A109
B105
A108
C039 C037 C047 C036 C038
C043 C041 C048 C040 C042
C046 C044 C049 C045
C053 .1UF
C051 .1UF
C052 .1UF
C055
C056
C054 0.1UF
-5.2V
-5.2
A073 +5 VOLTS
B073 +5 VOLTS
C050
+5V
NOTE: THIS DRAWING IS APPLICABLE TO PWB 19268192.
CONTROL DATA CANADA LTD
VOLTAGE MARGIN MODULE ASSY: 210 PAK
TYPE: 1DP0
C
B
26-APR-85
SHEET 13A

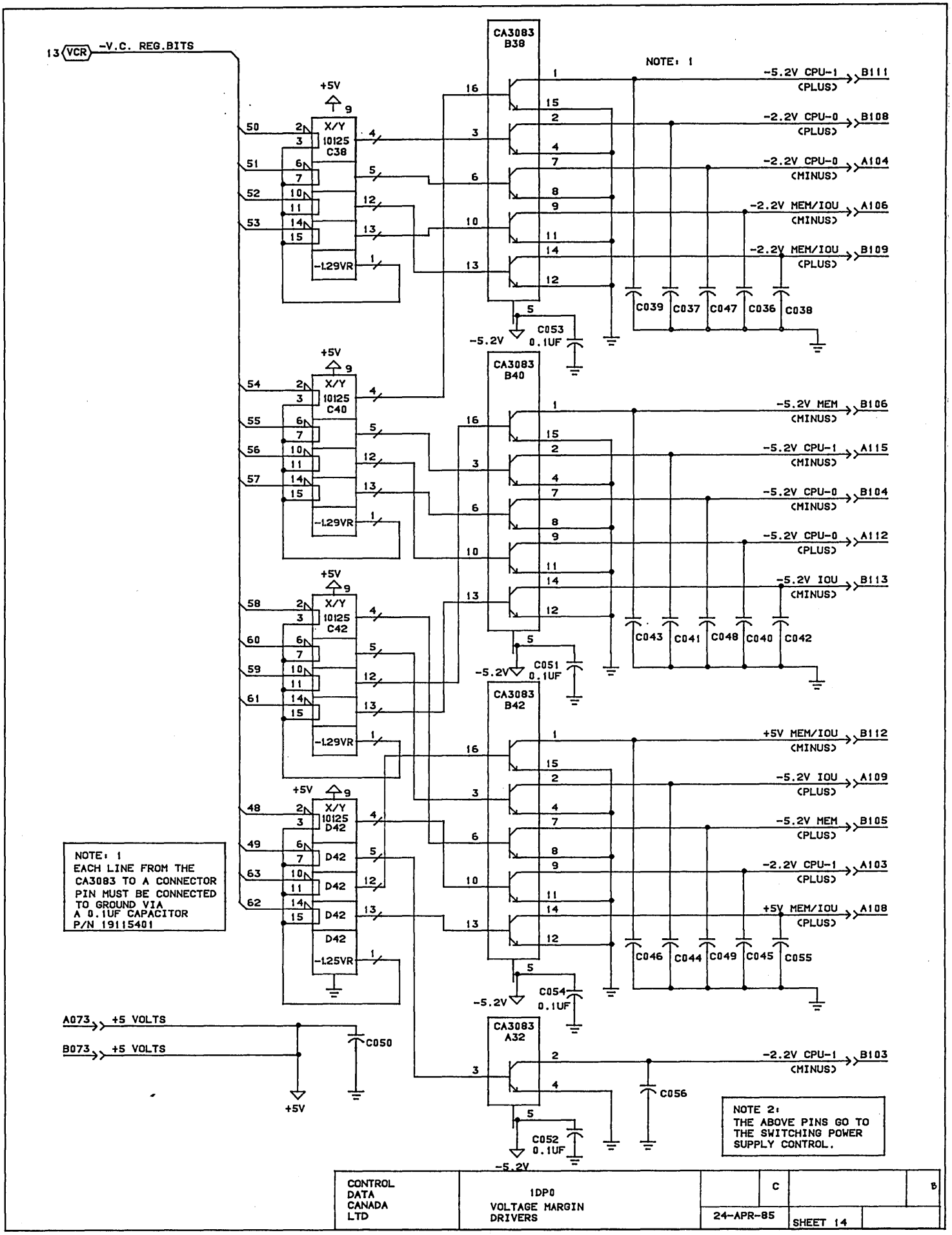
13 VCR -V.C. REG.BITS
CA3083 B38
CA3083 B40
CA3083 B42
CA3083 A32
X/Y 10125 C38
X/Y 10125 C40
X/Y 10125 C42
X/Y 10125 D42
-1.29VR
-1.25VR
+5V
-5.2V
NOTE: 1
-5.2V CPU-1 (PLUS) B111
-2.2V CPU-0 (PLUS) B108
-2.2V CPU-0 (MINUS) A104
-2.2V MEM/IOU (MINUS) A106
-2.2V MEM/IOU (PLUS) B109
-5.2V MEM (MINUS) B106
-5.2V CPU-1 (MINUS) A115
-5.2V CPU-0 (MINUS) B104
-5.2V CPU-0 (PLUS) A112
-5.2V IOU (MINUS) B113
+5V MEM/IOU (MINUS) B112
-5.2V IOU (PLUS) A109
-5.2V MEM (PLUS) B105
-2.2V CPU-1 (PLUS) A103
+5V MEM/IOU (PLUS) A108
-2.2V CPU-1 (MINUS) B103
C039 C037 C047 C036 C038
C043 C041 C048 C040 C042
C046 C044 C049 C045 C055
C053 0.1UF
C051 0.1UF
C054 0.1UF
C052 0.1UF
C050
C056
A073 +5 VOLTS
B073 +5 VOLTS
NOTE: 1
EACH LINE FROM THE CA3083 TO A CONNECTOR PIN MUST BE CONNECTED TO GROUND VIA A 0.1UF CAPACITOR P/N 19115401
NOTE 2:
THE ABOVE PINS GO TO THE SWITCHING POWER SUPPLY CONTROL.
CONTROL DATA CANADA LTD
1DP0 VOLTAGE MARGIN DRIVERS
C
B
24-APR-85
SHEET 14

SHEET REVISION STATUS																									
24	23	22	21	20	19	18	17	16	15	14	13	12	11	10	09	08	07	06	05	04	03	02	REV	ECO	DESCRIPTION	DRFT	DATE	CHKD	APP
01	01	01	01	01	01	01	01	01	01	01	01	01	01	01	01	01	01	01	01	01	01	01	01	—	INITIAL RELEASE	HN	3-30	NZ	
A	A	A	A	A	A	A	A	A	A	A	A	A	A	A	A	A	A	A	A	A	A	A	A	—	CLASS A RELEASE	CF	1-85	NZ	

CONNECTOR PIN ASSIGNMENTS

SIGNAL NAME	B PIN NO	A PIN NO	SIGNAL NAME
-5.2 V	B1	A1	-5.2 V
-5.2 V	B2	A2	-5.2 V
BOARD SEL	B3	A3	GND
T	B4	A4	GND
GND	B5	A5	GND
T	B6	A6	T
-2.2 V	B7	A7	-2.2 V
-2.2 V	B8	A8	-2.2 V
T	B9	A9	T
DATA BIT 0	B10	A10	T
GND	B11	A11	GND
BIT 1	B12	A12	T
BIT 2	B13	A13	T
BIT 3	B14	A14	T
GND	B15	A15	GND
BIT 4	B16	A16	T
BIT 5	B17	A17	T
BIT 6	B18	A18	T
GND	B19	A19	GND
BIT 7	B20	A20	T
BIT 8	B21	A21	T
BIT 9	B22	A22	T
GND	B23	A23	GND
BIT 10	B24	A24	T
BIT 11	B25	A25	T
BIT 12	B26	A26	T
GND	B27	A27	GND
BIT 13	B28	A28	T
BIT 14	B29	A29	T
BIT 15	B30	A30	T
GND	B31	A31	GND
BIT 16	B32	A32	T
BIT 17	B33	A33	T
BIT 18	B34	A34	T
GND	B35	A35	GND
BIT 19	B36	A36	T
BIT 20	B37	A37	T
BIT 21	B38	A38	T
GND	B39	A39	GND
BIT 22	B40	A40	T
BIT 23	B41	A41	T
BIT 24	B42	A42	T
GND	B43	A43	GND
BIT 25	B44	A44	T
BIT 26	B45	A45	T
BIT 27	B46	A46	T
GND	B47	A47	GND
BIT 28	B48	A48	T
BIT 29	B49	A49	T
BIT 30	B50	A50	T
GND	B51	A51	GND
BIT 31	B52	A52	T
BIT 32	B53	A53	T
BIT 33	B54	A54	T
GND	B55	A55	GND
BIT 34	B56	A56	T
BIT 35	B57	A57	T
BIT 36	B58	A58	T
GND	B59	A59	GND
BIT 37	B60	A60	T
+5 V	B61	A61	+5 V
BIT 38	B62	A62	T
GND	B63	A63	GND
BIT 39	B64	A64	T
NC	B65	A65	NC

SIGNAL NAME	B PIN NO	A PIN NO	SIGNAL NAME
NC	B66	A66	NC
BIT 40	B67	A67	T
GND	B68	A68	GND
BIT 41	B69	A69	T
+5 V	B70	A70	+5 V
BIT 42	B71	A71	T
GND	B72	A72	GND
BIT 43	B73	A73	T
BIT 44	B74	A74	T
BIT 45	B75	A75	T
GND	B76	A76	GND
BIT 46	B77	A77	T
BIT 47	B78	A78	T
BIT 48	B79	A79	T
GND	B80	A80	GND
BIT 49	B81	A81	T
BIT 50	B82	A82	T
BIT 51	B83	A83	T
GND	B84	A84	GND
BIT 52	B85	A85	T
BIT 53	B86	A86	T
BIT 54	B87	A87	T
GND	B88	A88	GND
BIT 55	B89	A89	T
BIT 56	B90	A90	T
BIT 57	B91	A91	T
GND	B92	A92	GND
BIT 58	B93	A93	T
BIT 59	B94	A94	T
BIT 60	B95	A95	T
GND	B96	A96	GND
BIT 61	B97	A97	T
BIT 62	B98	A98	T
BIT 63	B99	A99	T
GND	B100	A100	GND
BIT 64	B101	A101	T
BIT 65	B102	A102	T
BIT 66	B103	A103	T
GND	B104	A104	GND
BIT 67	B105	A105	T
BIT 68	B106	A106	T
BIT 69	B107	A107	T
GND	B108	A108	GND
BIT 70	B109	A109	T
BIT 71	B110	A110	T
A1/A10	B111	A111	A0/A9
GND	B112	A112	GND
A3/A12	B113	A113	A2/A11
A5/A14	B114	A114	A4/A13
T	B115	A115	A8/A17
GND	B116	A116	GND
REFRESH	B117	A117	A6/A15
T	B118	A118	WRITE
RAS	B119	A119	CAS
GND	B120	A120	GND
A18	B121	A121	DATA GATE
T	B122	A122	A7/A16
-2.2 V	B123	A123	-2.2 V
-2.2 V	B124	A124	-2.2 V
T	B125	A125	T
GND	B126	A126	GND
T	B127	A127	T
T	B128	A128	T
-5.2 V	B129	A129	-5.2 V
-5.2 V	B130	A130	-5.2 V

NOTES:

1. T DESIGNATES A CONNECTION TO A 100 Ω TERMINATION TO -2.2 V.
2. NO ECL TERMINATIONS SHOWN.
3. UNUSED GATES (DESIGNATED BY EITHER A SINGLE INPUT OR OUTPUT): A42-5. B42-14. B40-2. B40-3.
4. UNUSED BUT COMMITTED GATES (DESIGNATED BY EITHER A SINGLE INPUT OR OUTPUT): D44-2. D44-3. E44-2. E44-3. C44-10.
5. A18. HIGHEST ORDER ADRS BIT SELECTS RASO. I OUTPUT (SEE SHEET 4). MUST BE STABLE THE ENTIRE MEMORY CYCLE.

DETAILED LISTS

UNLESS OTHERWISE SPECIFIED DIMENSIONS ARE IN INCHES TOLERANCES
2 PLACE ± 3 PLACE ± ANGLES ±

DO NOT SCALE DRAWING

MATERIAL

FINISH

CONTROL DATA CORPORATION — ARDEN HILLS OPERATION

FIRST USED ON	CRM3	
DRN	H NORD	3-30
CHKD	N ZAK	3-30
ENG		
MFG		
APPD		

TITLE

SCHEMATIC
524K X 72
3HBH, M3CR MEMORY MODULE

CODE IDENT 34010 D

DRAWING NO 24670814

SCALE

SHEET 02

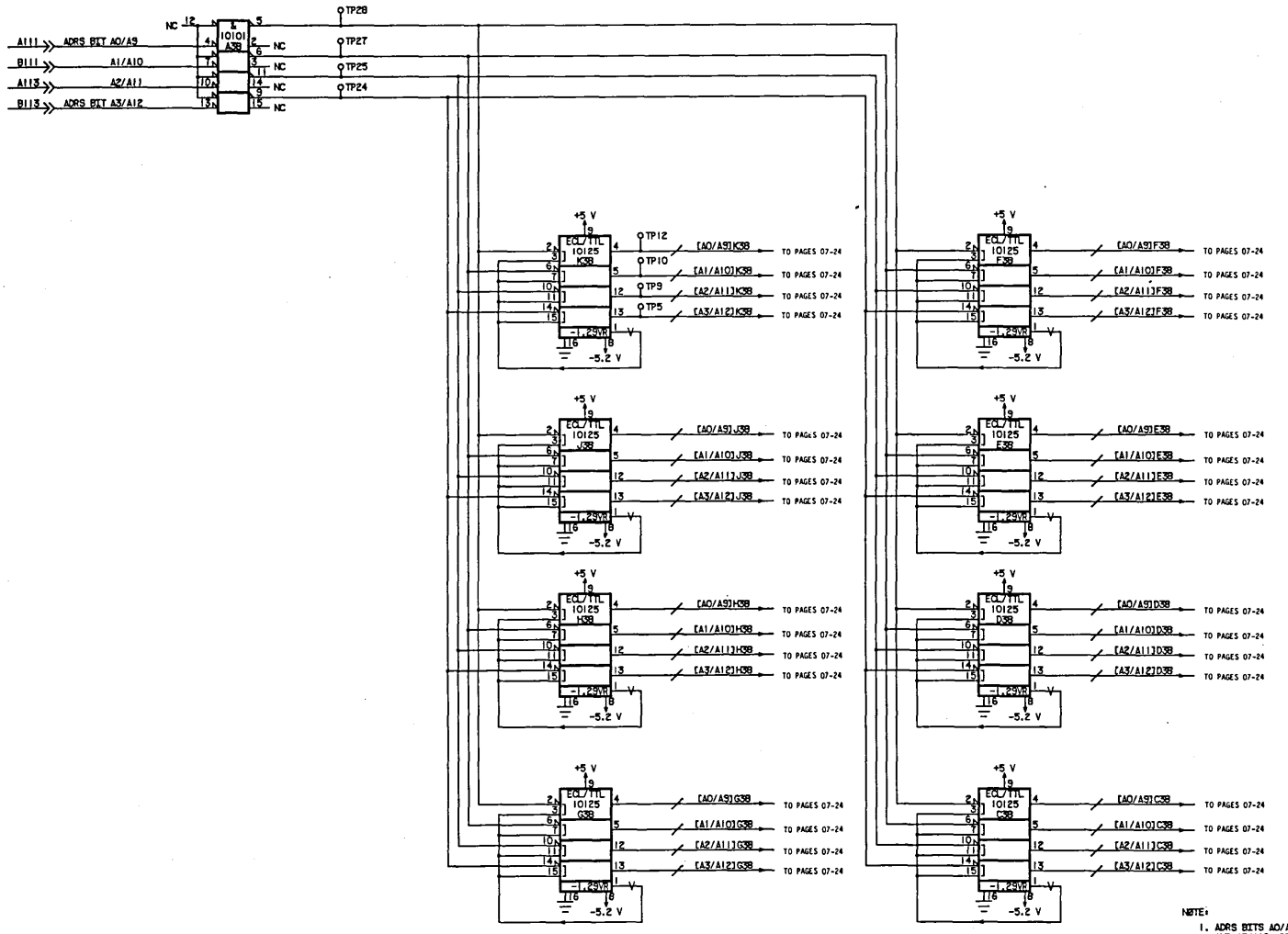

NOTE:

1. ADRS BITS A0/A9, A1/A10, A2/A11 AND A3/A12 ARE NOT TERMINATED.

DEVELOPMENT DIVISION	LEVEL 4 DIAGRAM SCHEMATIC 524K X 72 3HBH, M3CR MEMORY MODULE	24670814	A
		CM 4.3-01	03

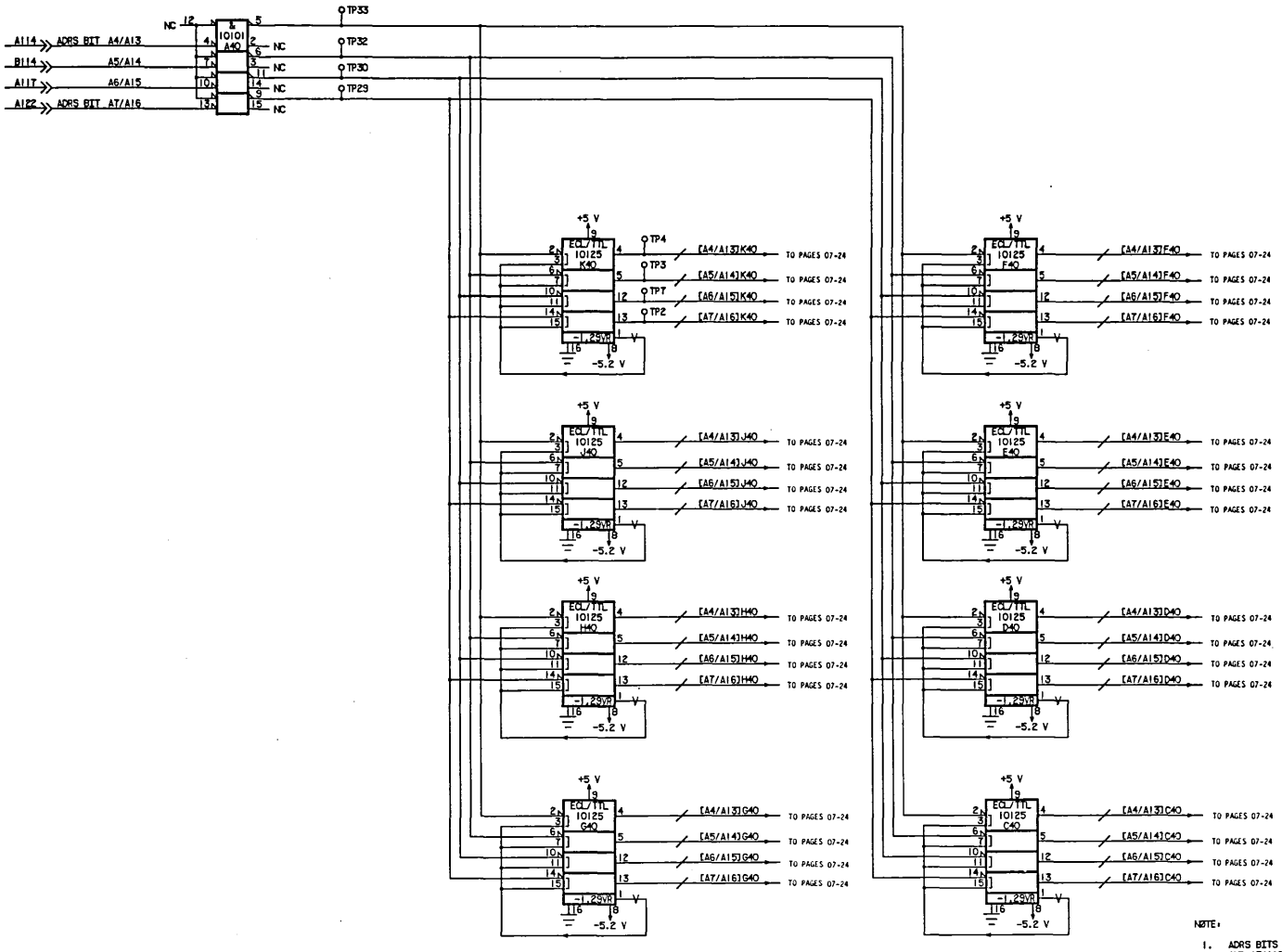

NOTE:

1. ADRS BITS A4/A13, A5/A14, A6/A15 AND A7/A16 ARE NOT TERMINATED.

DEVELOPMENT DIVISION	LEVEL 4 DIAGRAM SCHEMATIC 524K X T2 3HEH, M3CR MEMORY MODULE	24670814	A
		CM 4.3-02	04

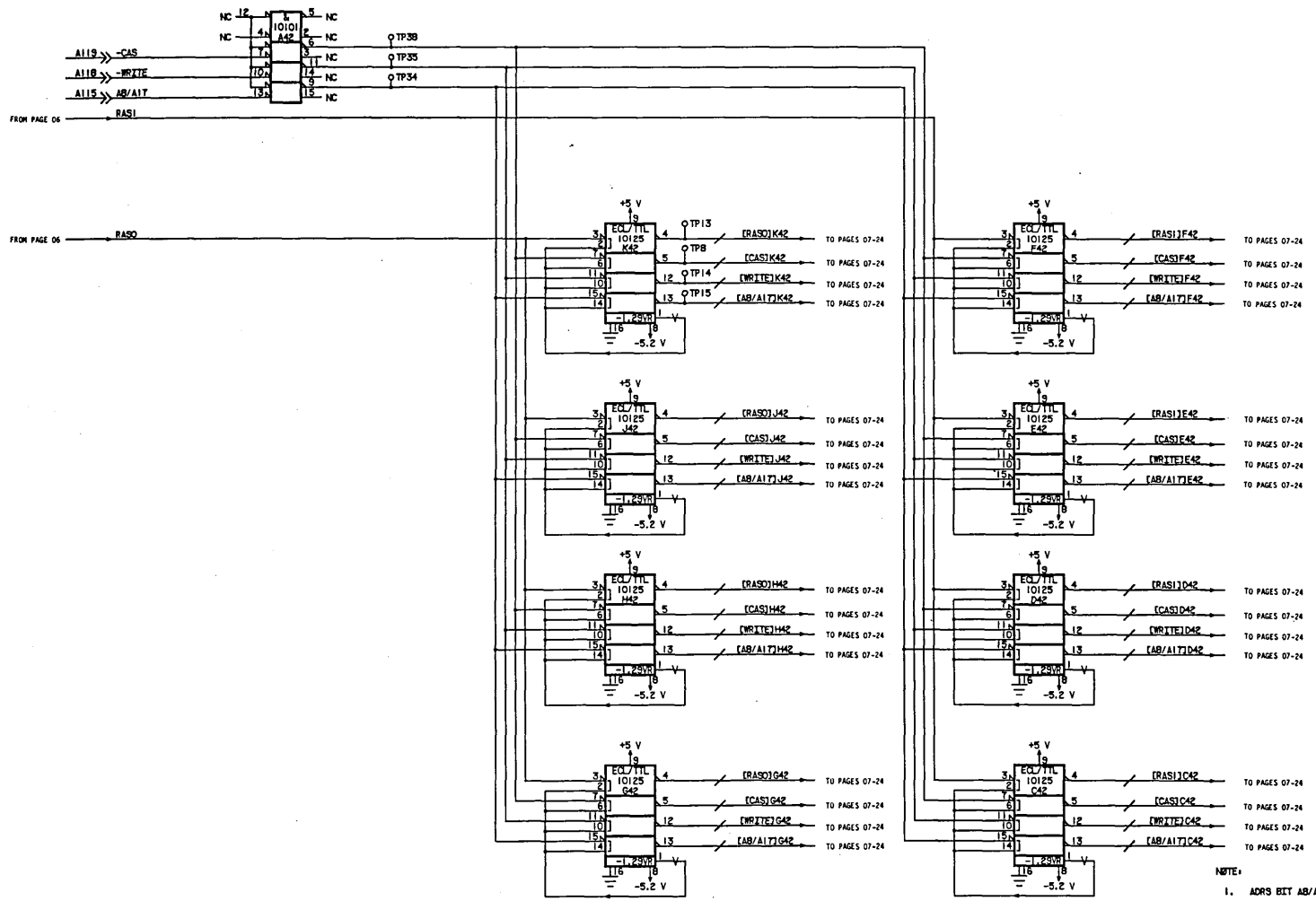

NOTE:

1. ADRS BIT A8/A17 IS NOT TERMINATED.
2. THE CAS INPUT. (A119) AND THE WRITE INPUT. (A118) ARE NOT TERMINATED.

DEVELOPMENT DIVISION	LEVEL 4 DIAGRAM SCHEMATIC 524K X 72 3HEH. MOOR MEMORY MODULE	2467081 4	A
		CM 4.3-03	05

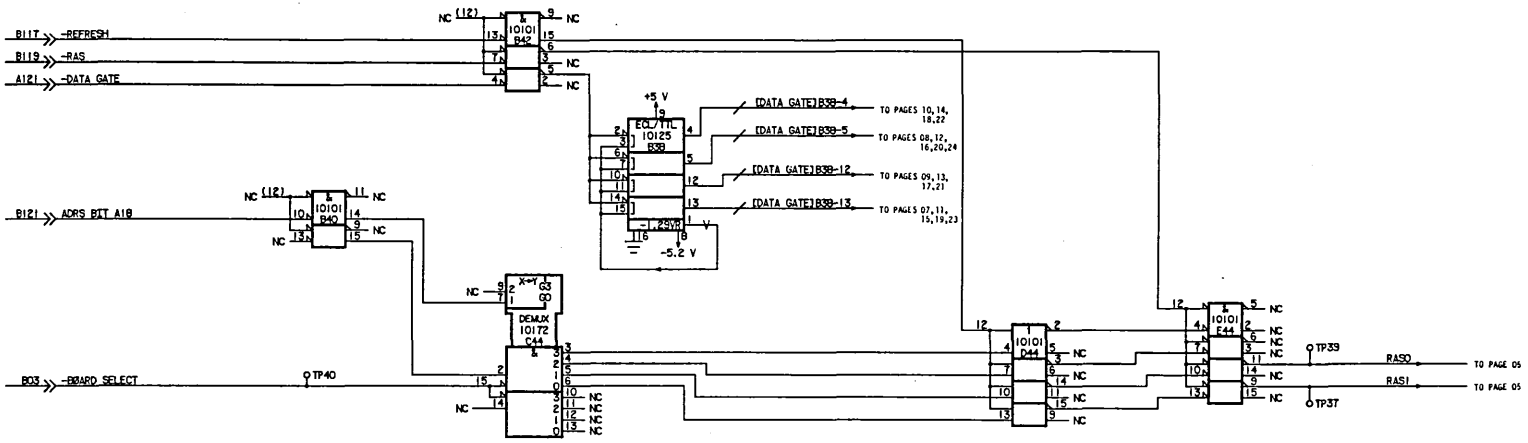

NOTES:

1.

B121(A18) VOLTAGE	RAS ENABLED
-1.8 (''1'')	RAS 0
-0.8 (''-0'')	RAS 1

2. ADRS BIT A18 (B121), REFRESH (B117), AND RAS (B119) ARE NOT TERMINATED.
3. BOARD SELECT (B03) AND DATA GATE (A121) ARE TERMINATED.

DEVELOPMENT DIVISION	LEVEL 4 DIAGRAM SCHEMATIC 524K X T2 3HEH, M3CR MEMORY MODULE	2467D814	A
		CM 4.3-04	06

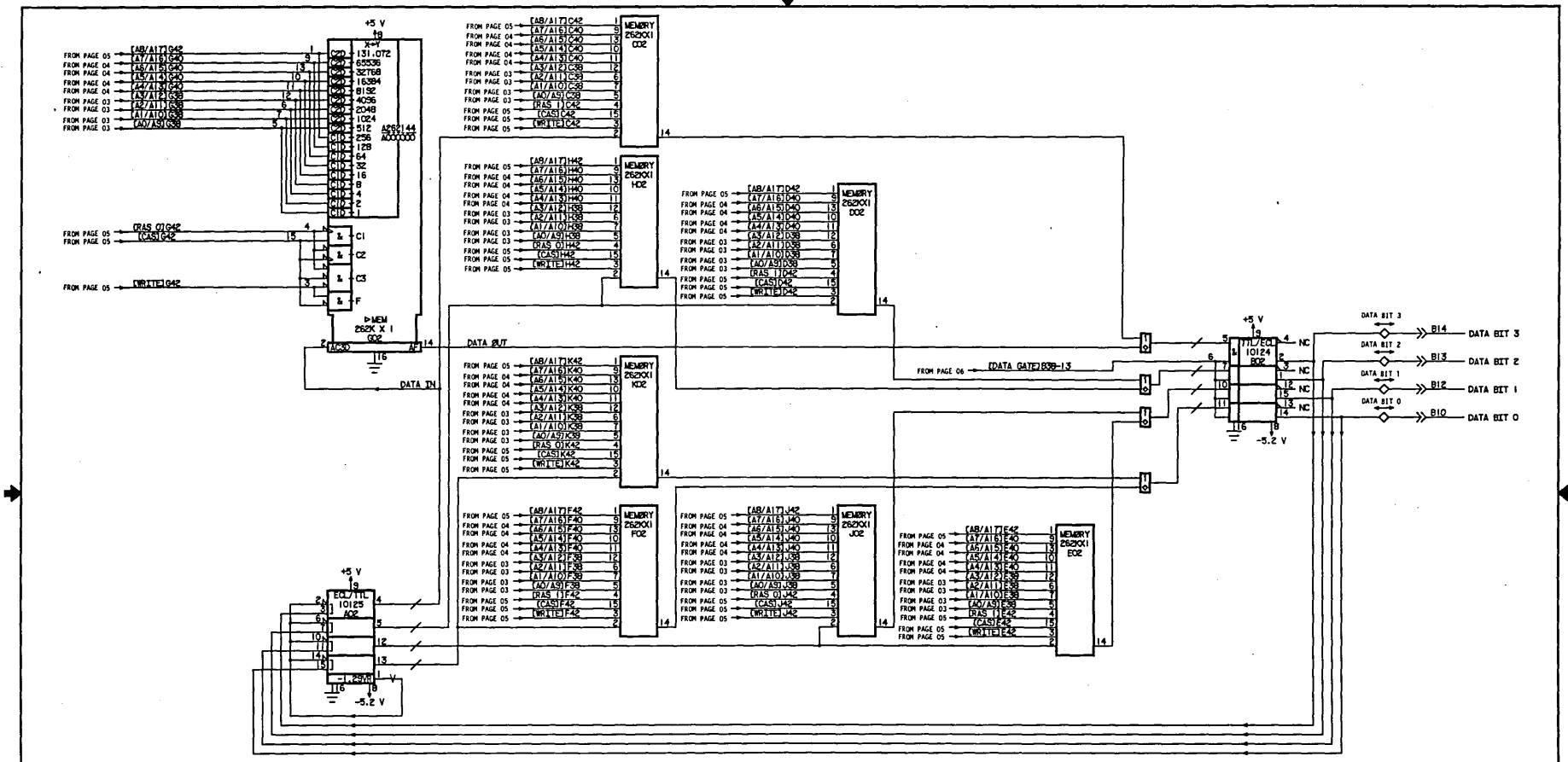

NOTES:

1. ALSO USED FOR REFRESH.
2. CONNECTOR PINS B14, B13, B12, AND B10 ARE NOT TERMINATED.
3. GHJK ROWS USE RAS 0
   CDEF ROWS USE RAS 1.

DEVELOPMENT DIVISION	LEVEL 4 DIAGRAM SCHEMATIC 524K X 72 3HBH. MOCR MEMORY MODULE	2467D814	A
		CM 4.3-05	07

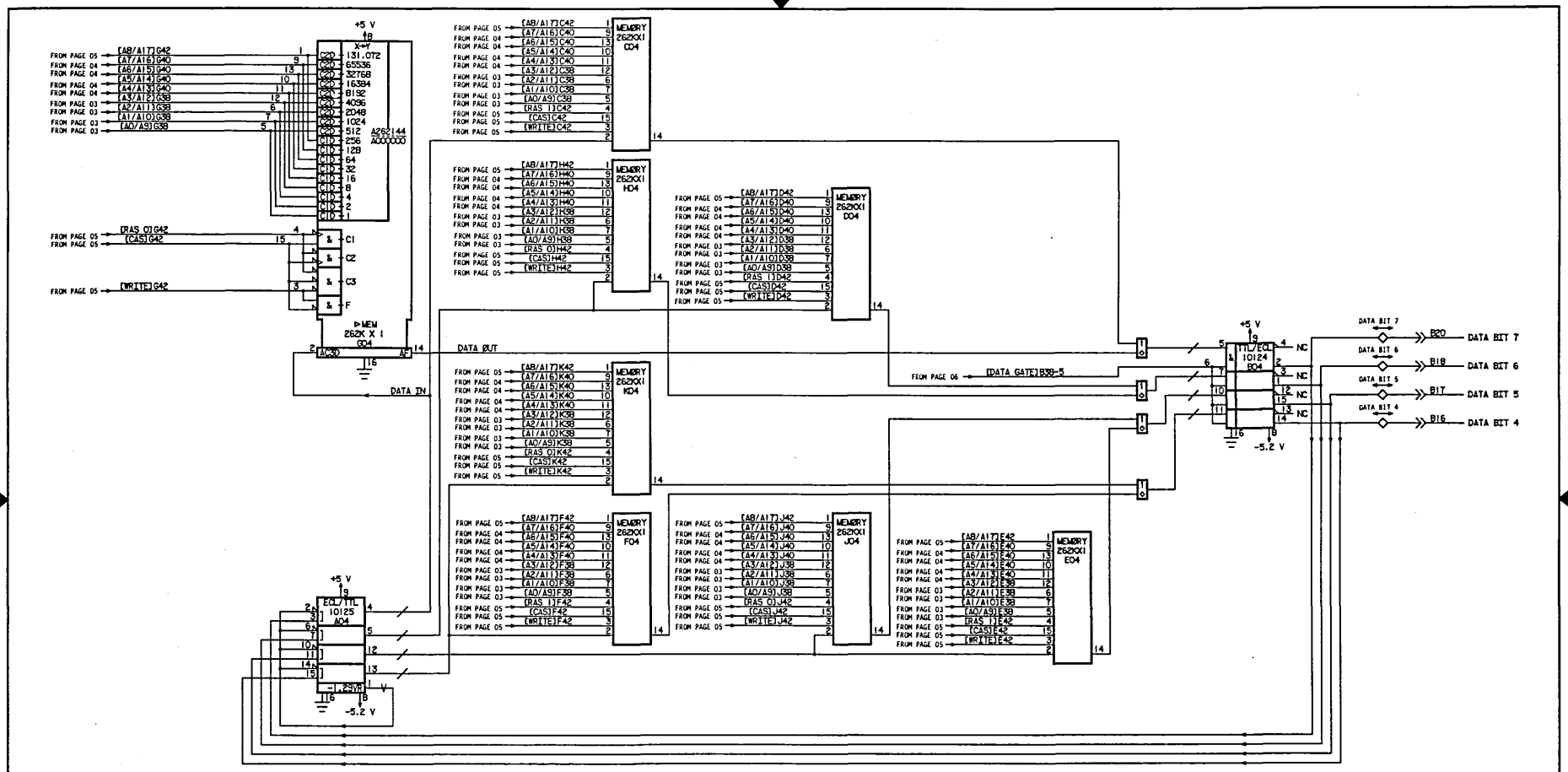

NØTES:

1. ALSØ USED FØR REFRESH.
2. CØNNECTØR PINS B20, B18, B17, AND B16 ARE NØT TERMINATED.
3. GHJK RØWS USE RAS 0
   CDEF RØWS USE RAS 1.

DEVELOPMENT DIVISION	LEVEL 4 DIAGRAM SCHEMATIC 524K X 72 3HEH. M3CR MEMØRY MØDULE	2467C814	A
		CM 4.3-06	08

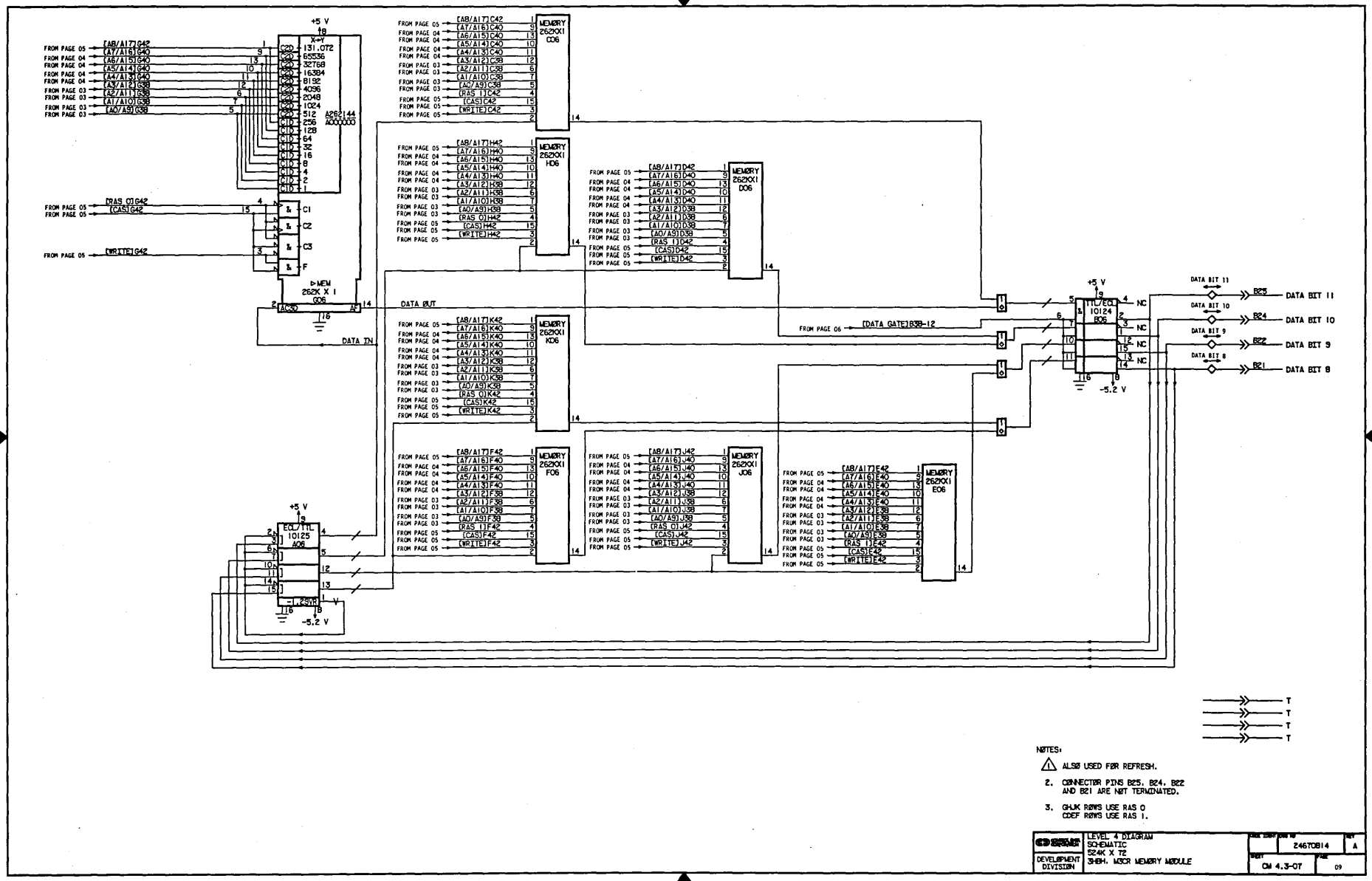

NOTES:

1. ALSO USED FOR REFRESH.
2. CONNECTOR PINS B25, B24, B22 AND B21 ARE NOT TERMINATED.
3. GHJK ROWS USE RAS 0
   CDEF ROWS USE RAS 1.

DEVELOPMENT DIVISION	LEVEL 4 DIAGRAM SCHEMATIC 524K X 72 3HBH. MOCR MEMORY MODULE	24670814	A
		CM 4.3-07	09

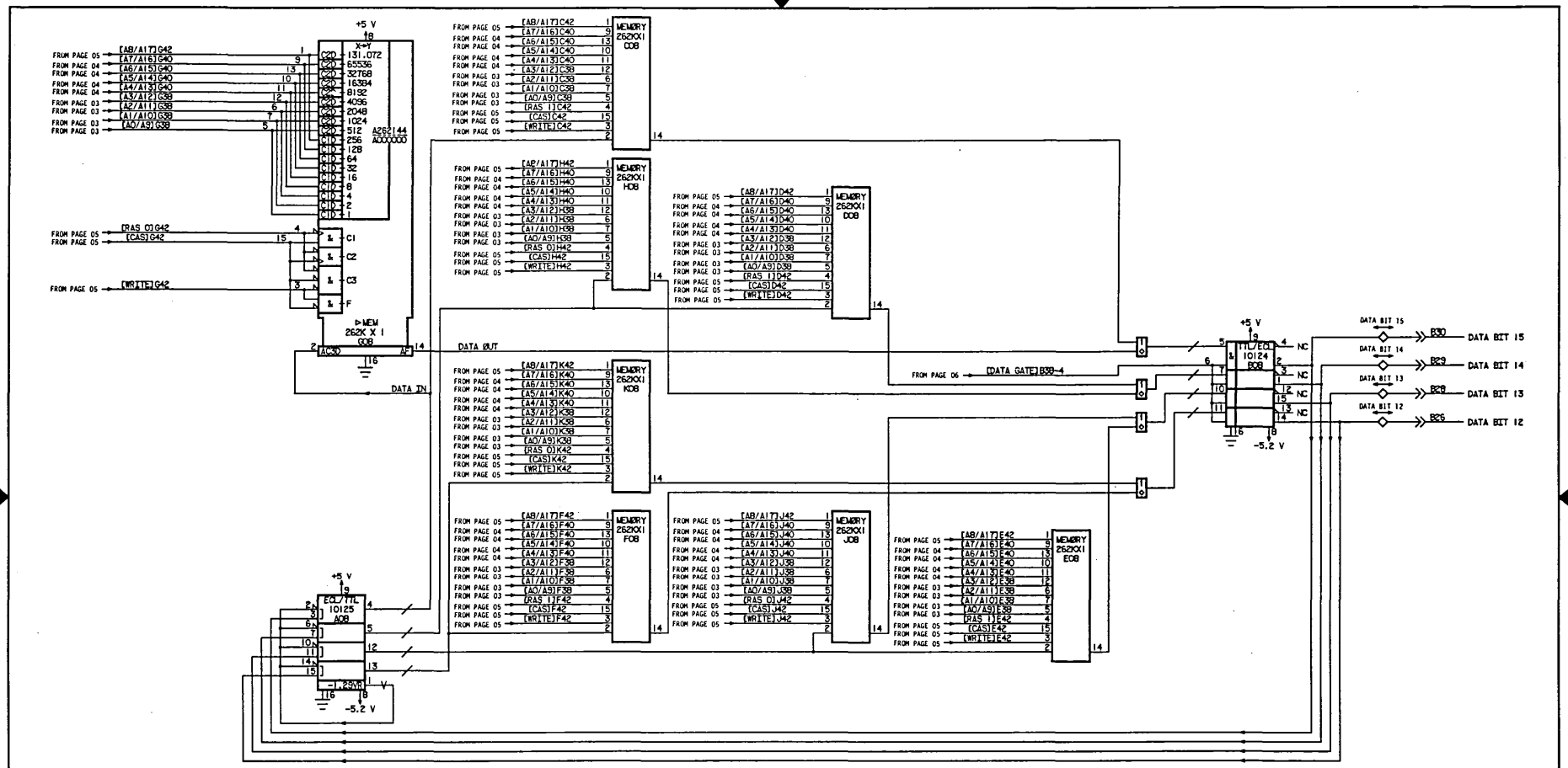

NOTES:

1. ALSO USED FOR REFRESH.
2. CONNECTOR PINS B30, B29, B28, AND B26 ARE NOT TERMINATED.
3. GHJK ROWS USE RAS 0
   CDEF ROWS USE RAS 1.

DEVELOPMENT DIVISION	LEVEL 4 DIAGRAM SCHEMATIC 524K X 72 3HEH. MOCR MEMORY MODULE	Z4670814	A
		CM 4.3-08	10

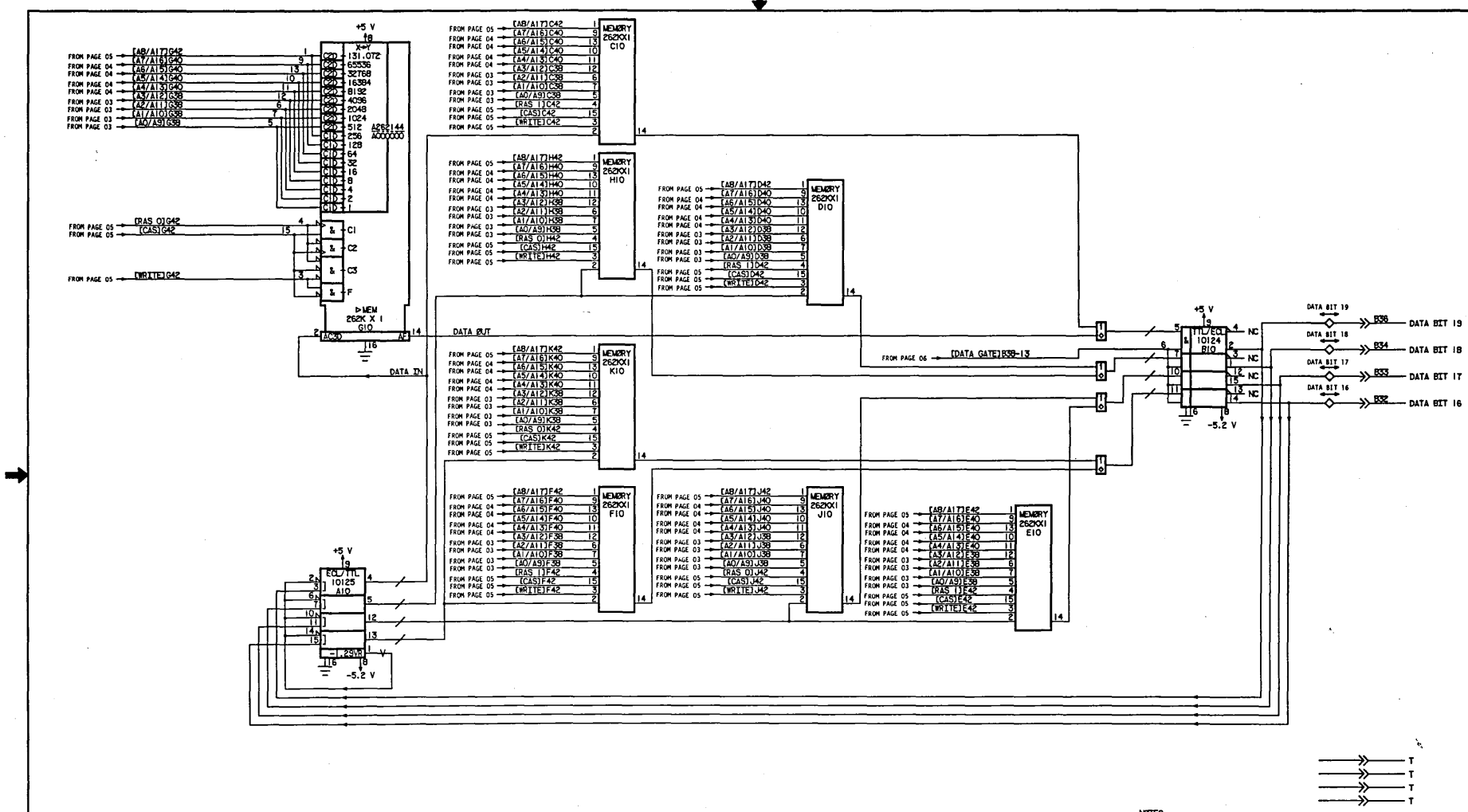

NOTES:

1. ALSØ USED FØR REFRESH.
2. CØNNECTØR PINS B36, B34, B33, AND B32 ARE NØT TERMINATED.
3. GHJK RØWS USE RAS 0
   CDEF RØWS USE RAS 1.

DEVELØPMENT DIVISIØN	LEVEL 4 DIAGRAM SCHEMATIC 524K X 72 3HBH, M3CR MEMØRY MØDULE	24670814	A
		CM 4.3-09	11

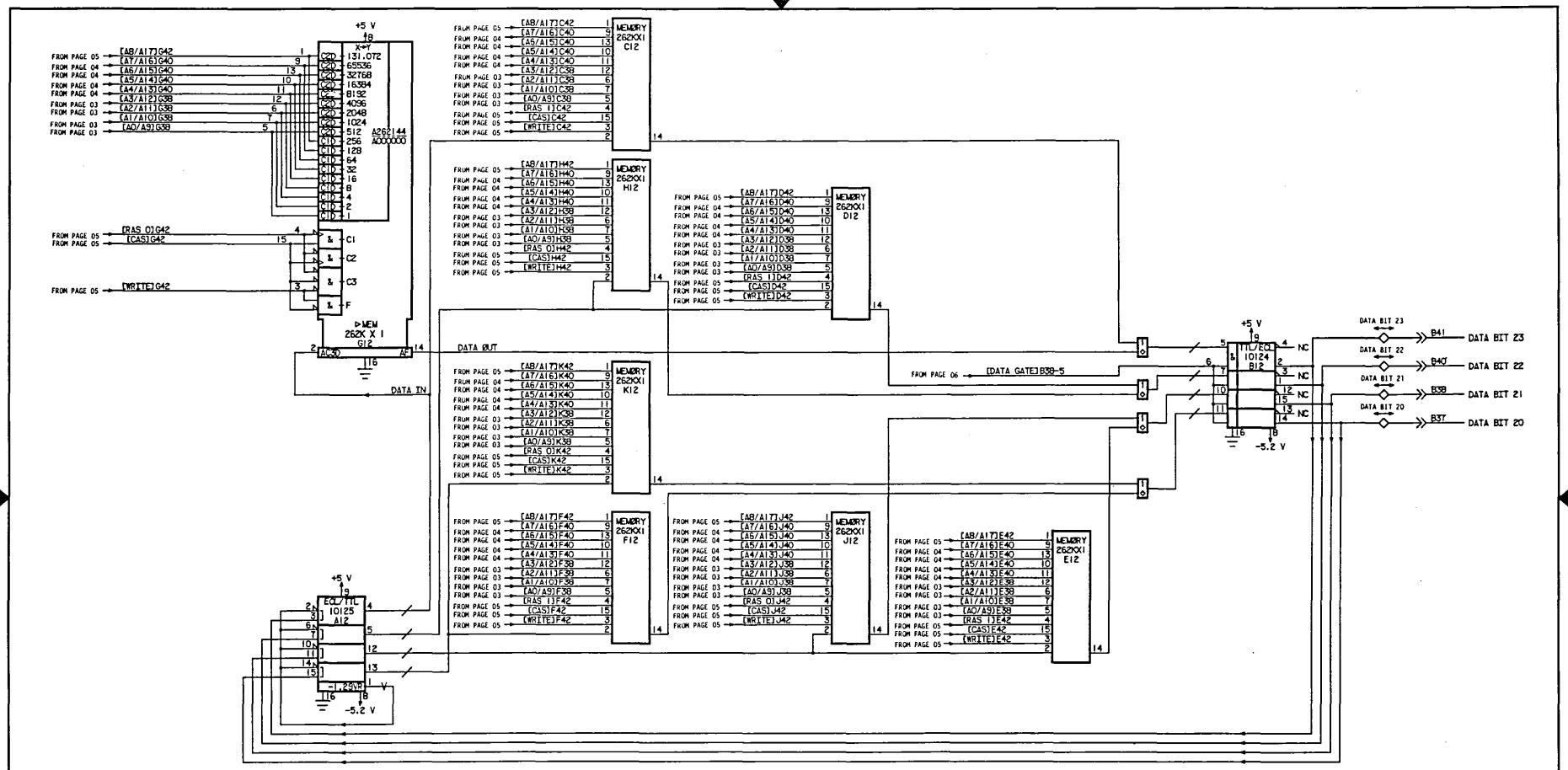

NOTES:

1. ALSO USED FOR REFRESH.
2. CONNECTOR PINS B41, B40, B39, AND B37 ARE NOT TERMINATED.
3. GHJK ROWS USE RAS 0
   CDEF ROWS USE RAS 1.

DEVELOPMENT DIVISION	LEVEL 4 DIAGRAM SCHEMATIC 524K X 72 3HEH. W3CR MEMORY MODULE	2467C814	A
		CM 4.3-10	12

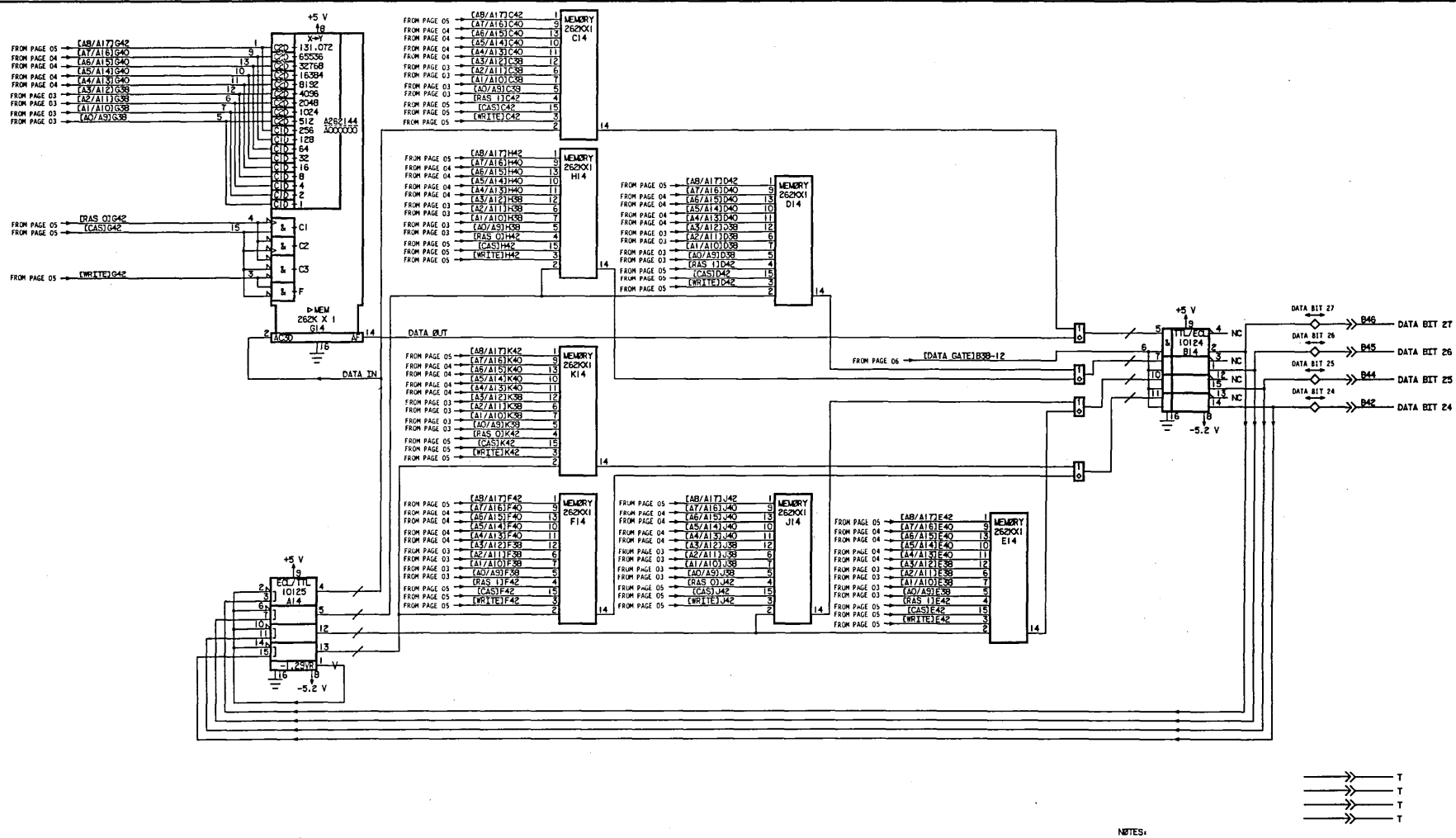

NOTES:

1. ALSØ USED FØR REFRESH.
2. CØNNECTØR PINS B46, B45, B44, AND B42 ARE NØT TERMINATED.
3. GHJK RØWS USE RAS 0
   CDEF RØWS USE RAS 1.

CDEF DEVELØPMENT DIVISIØN	LEVEL 4 DIAGRAM SCHEMATIC 524K X 72 3HBH, M3CR MEMØRY MØDULE	24670814	A
		CM 4.3-11	13

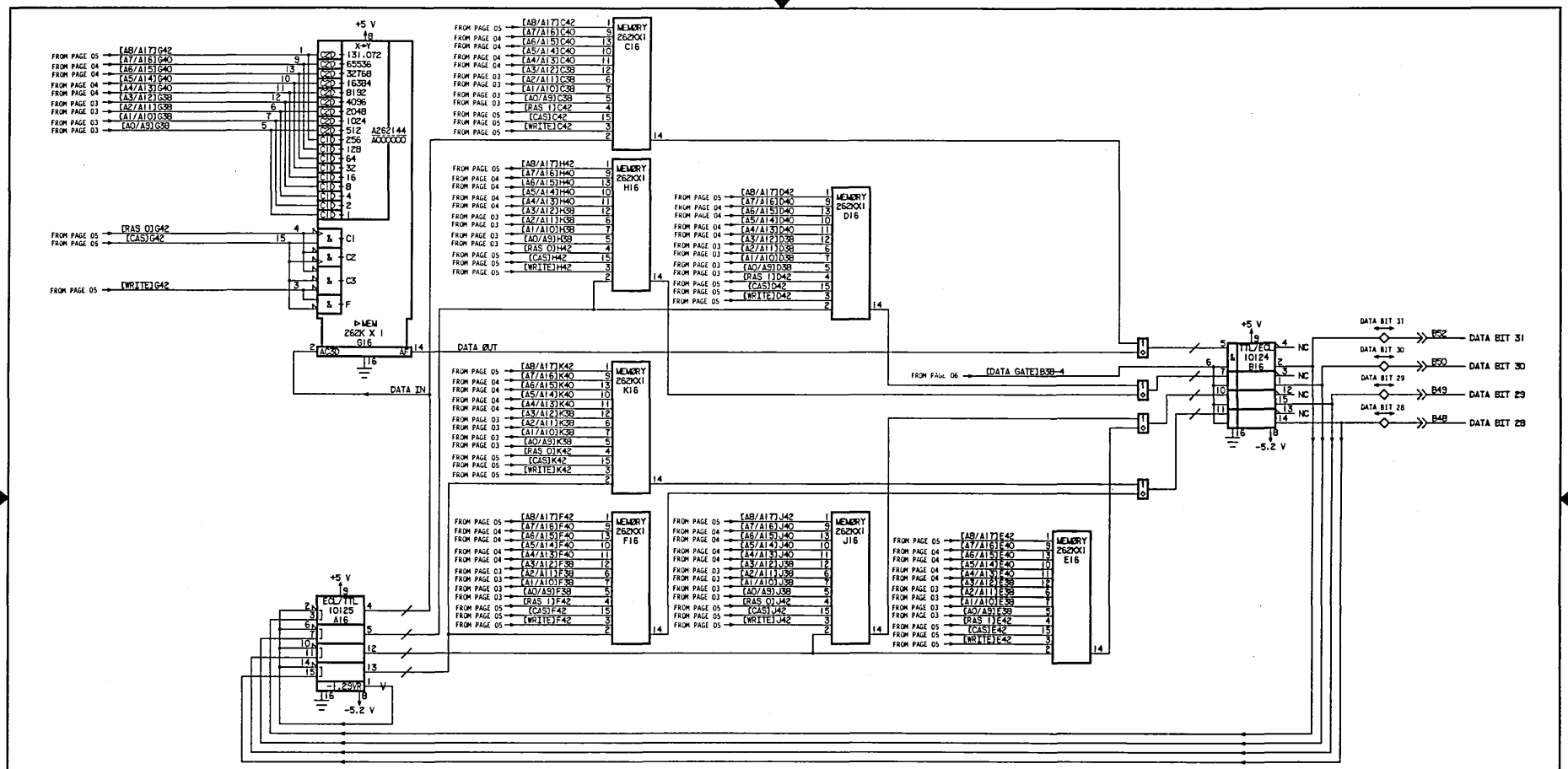

NOTES:

1. ALSØ USED FØR REFRESH.
2. CØNNECTØR PINS B52, B50, B49, AND B48 ARE NØT TERMINATED.
3. GHJK RØWS USE RAS 0
   CDEF RØWS USE RAS 1.

CDC DEVELOPMENT DIVISION	LEVEL 4 DIAGRAM SCHEMATIC 524K X 72 3HEH. MØCR MEMØRY MØDULE	24670814	A
		CM 4.3-12	14

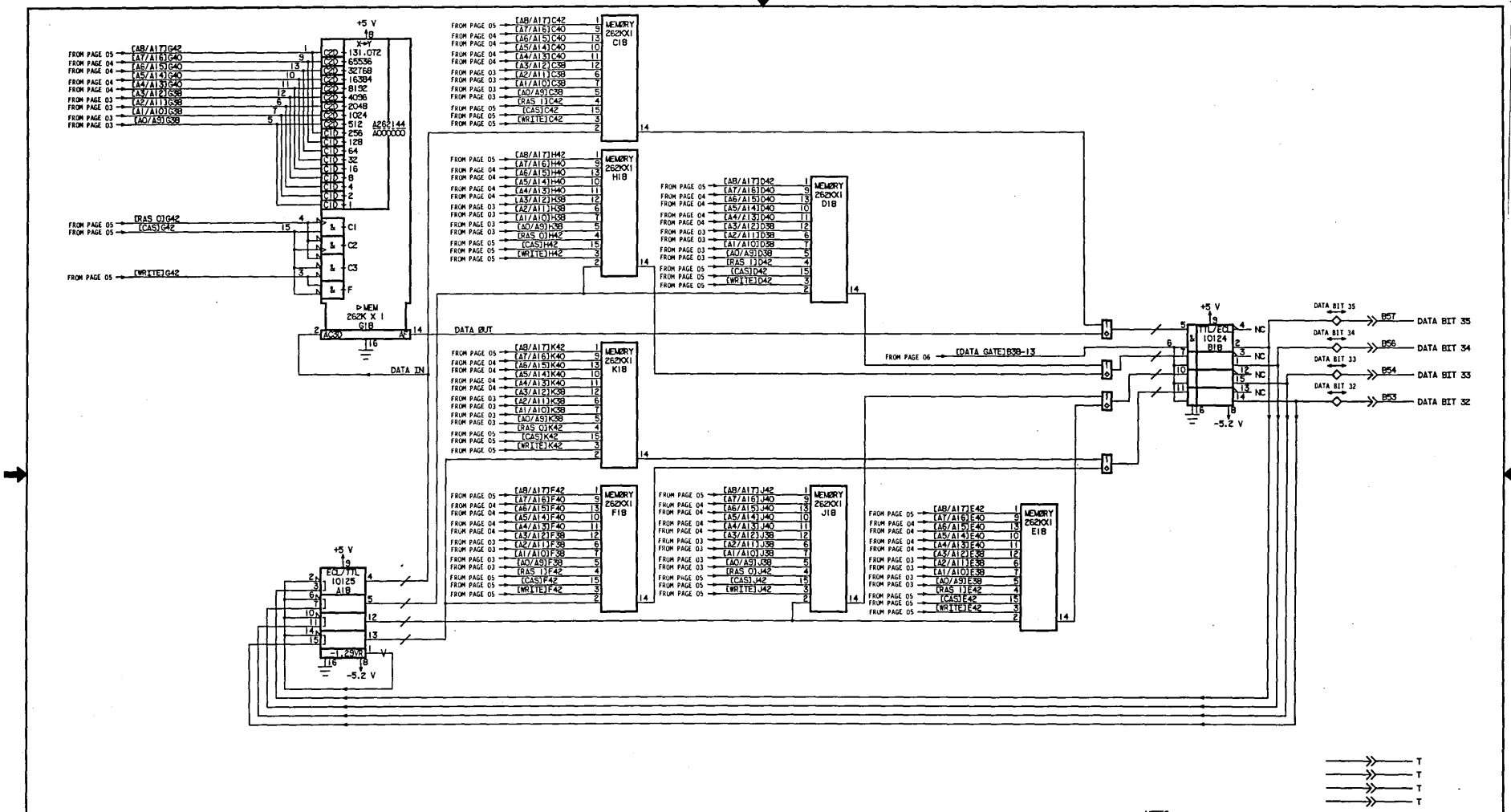

NOTES:

1. ALSO USED FOR REFRESH.
2. CONNECTOR PINS B57, B56, B54, AND B53 ARE NOT TERMINATED.
3. GHJK ROWS USE RAS 0
   CDEF ROWS USE RAS 1.

DEVELOPMENT DIVISION	LEVEL 4 DIAGRAM SCHEMATIC 524K X 72 3HBH, M3CR MEMORY MODULE	246T0814	A
		CM 4.3-13	15

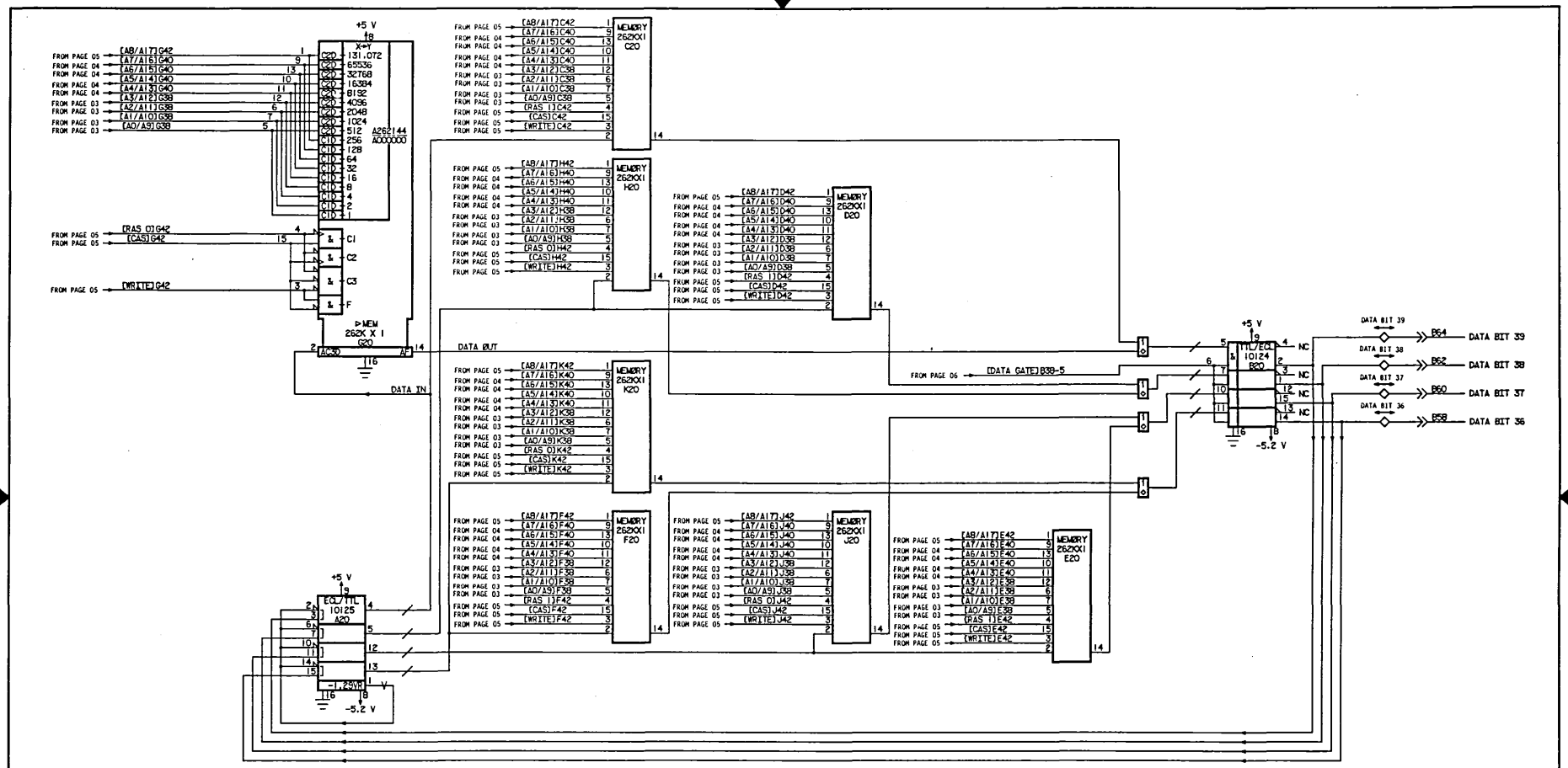

NOTES:

1. ⚠ ALSO USED FOR REFRESH.
2. CONNECTOR PINS B64, B62, B60, AND B58 ARE NOT TERMINATED.
3. GHJK ROWS USE RAS 0
   CDEF ROWS USE RAS 1.

DIGITAL EQUIPMENT CORPORATION	LEVEL 4 DIAGRAM SCHEMATIC 524K X 72 3HEH, MSCR MEMORY MODULE	2467C814	A
DEVELOPMENT DIVISION		CM 4.3-14	16

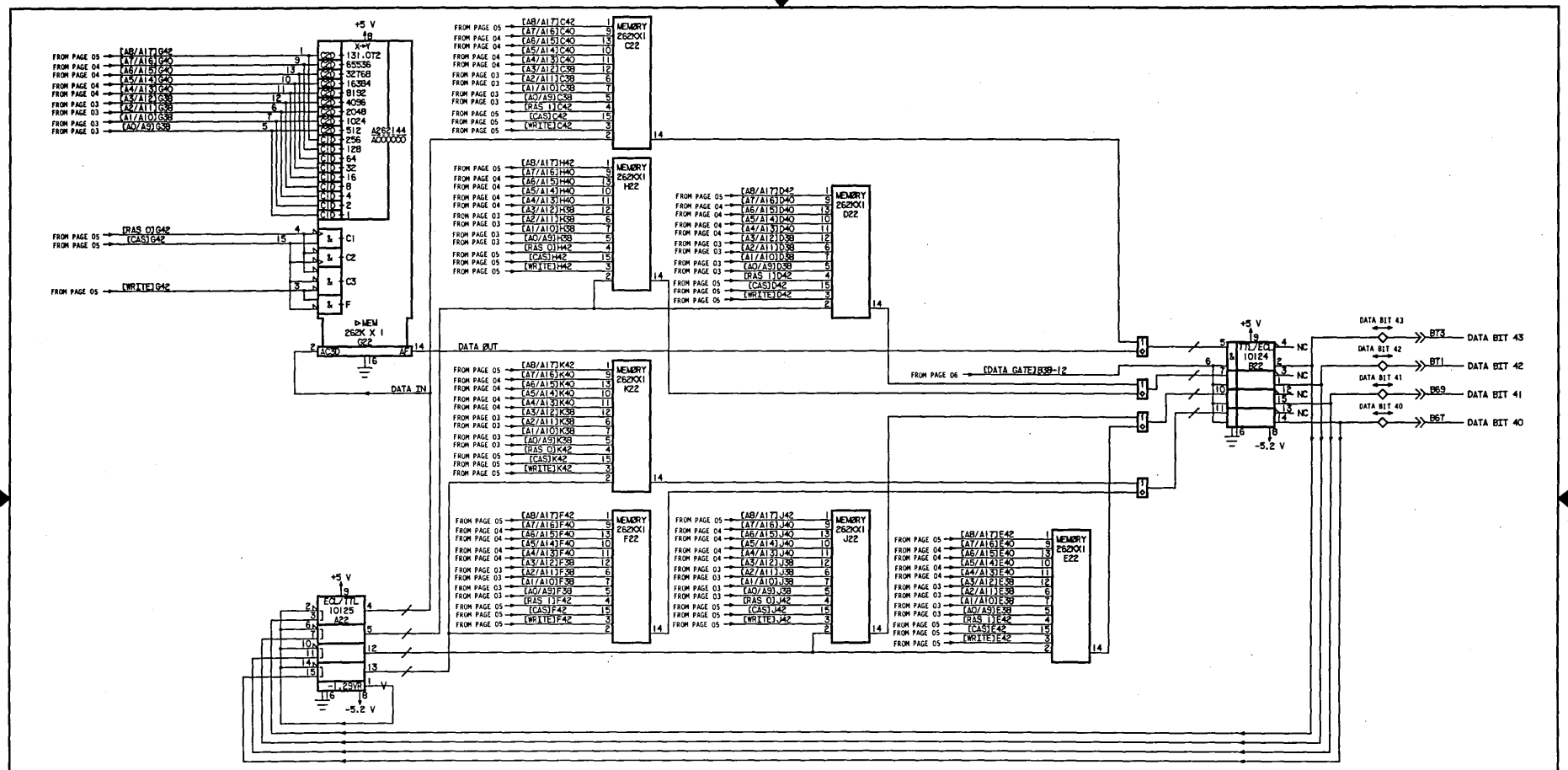

NØTES:

1. ALSØ USED FØR REFRESH.
2. CØNNECTØR PINS B73, B71, B69, AND B67 ARE NØT TERMINATED.
3. GHJK RØWS USE RAS 0
   CDEF RØWS USE RAS 1.

DEVELØPMENT DIVISIØN	LEVEL 4 DIAGRAM SCHEMATIC 524K X T2 3HBH, MØR MEMØRY MØDULE	24670814	A
		SHEET CM 4.3-15	PAGE 17

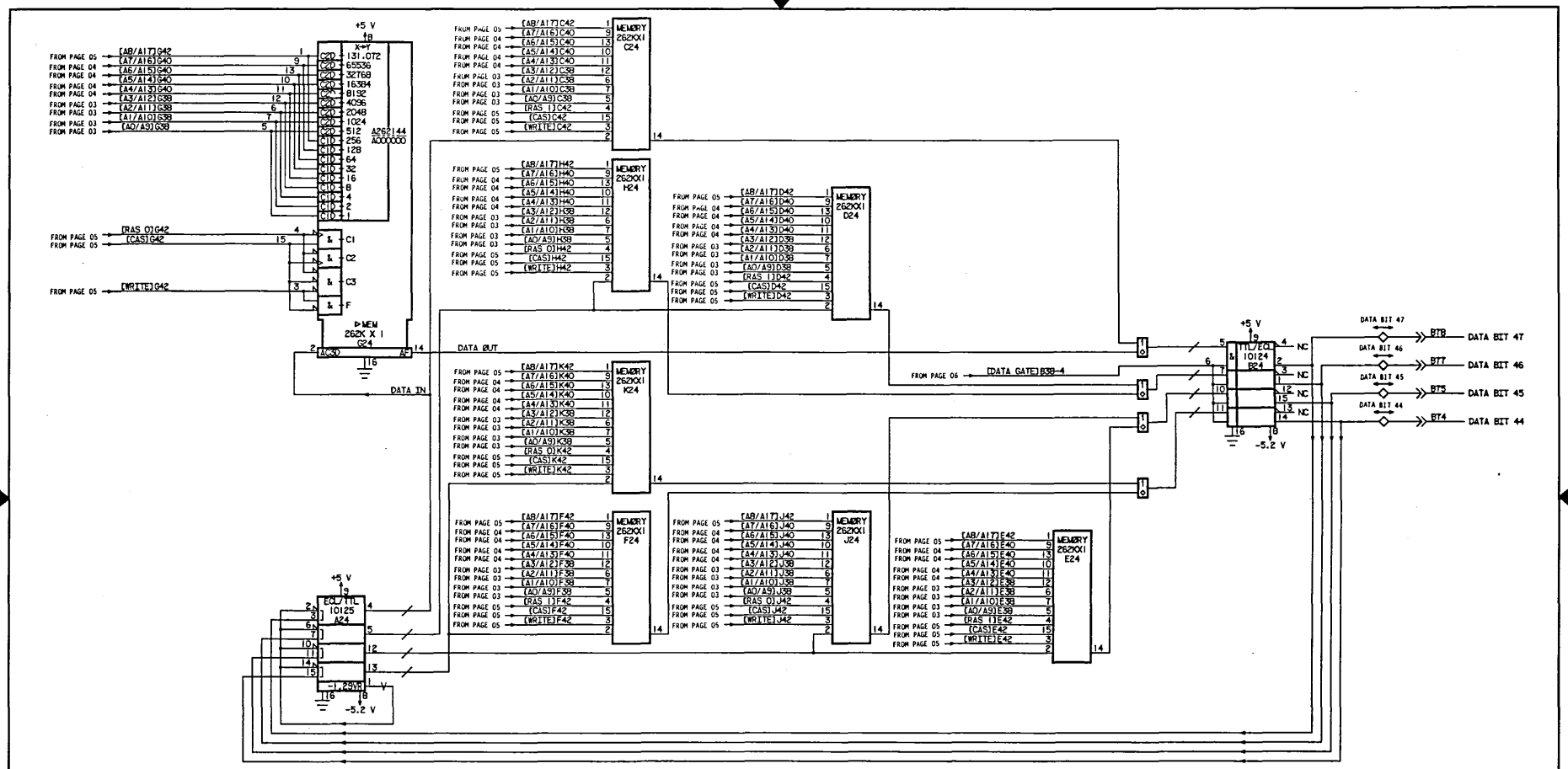

NØTES:

1. ⚠ ALSØ USED FØR REFRESH.
2. CØNNECTØR PINS BT8. BT7. BT5. AND BT4 ARE NØT TERMINATED.
3. GHJK RØWS USE RAS 0
   CDEF RØWS USE RAS 1.

CS DIGITAL EQUIPMENT	LEVEL 4 DIAGRAM SCHEMATIC 524K X 72 3HEM. M3CR MEMØRY MØDULE	2467DB14	A
DEVELOPMENT DIVISION		CM 4.3-16	18

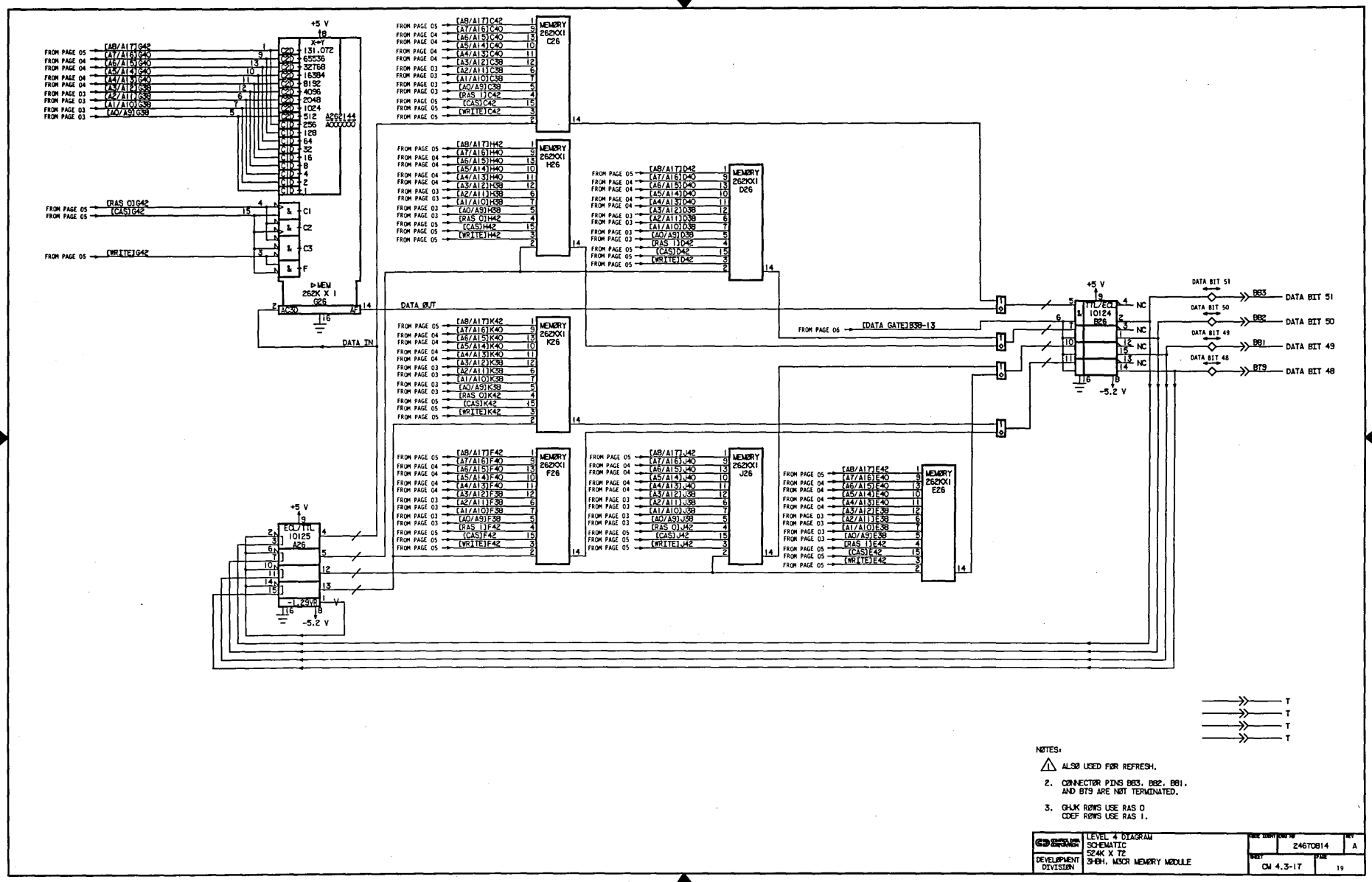

NOTES:

1. ALSO USED FOR REFRESH.
2. CONNECTOR PINS B63, B62, B61, AND B79 ARE NOT TERMINATED.
3. GHJK ROWS USE RAS 0
   CDEF ROWS USE RAS 1.

DEVELOPMENT DIVISION	LEVEL 4 DIAGRAM SCHEMATIC 524K X 72 3HEH, MOOR MEMORY MODULE	2467OB14	A
		CM 4.3-17	19

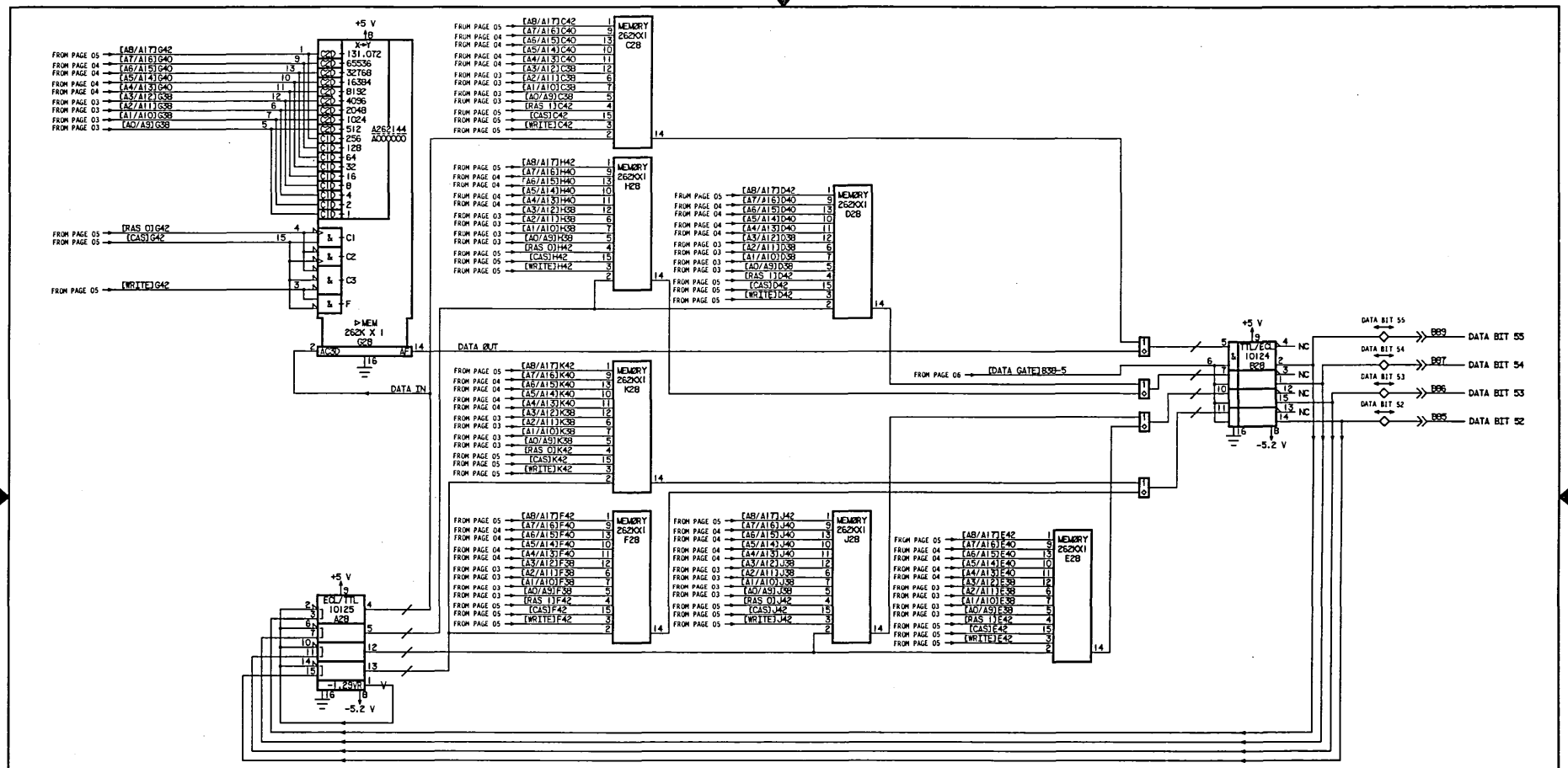

NØTES:

1. ⚠ ALSØ USED FØR REFRESH.
2. CØNNECTØR PINS B83, B87, B86, AND B85 ARE NØT TERMINATED.
3. GHJK RØWS USE RAS 0
   CDEF RØWS USE RAS 1.

DEVELØPMENT DIVISIØN	LEVEL 4 DIAGRAM SCHEMATIC 524K X 72 3HEH. MSCR MEMØRY MØDULE	24670814	A
		CM 4.3-18	20

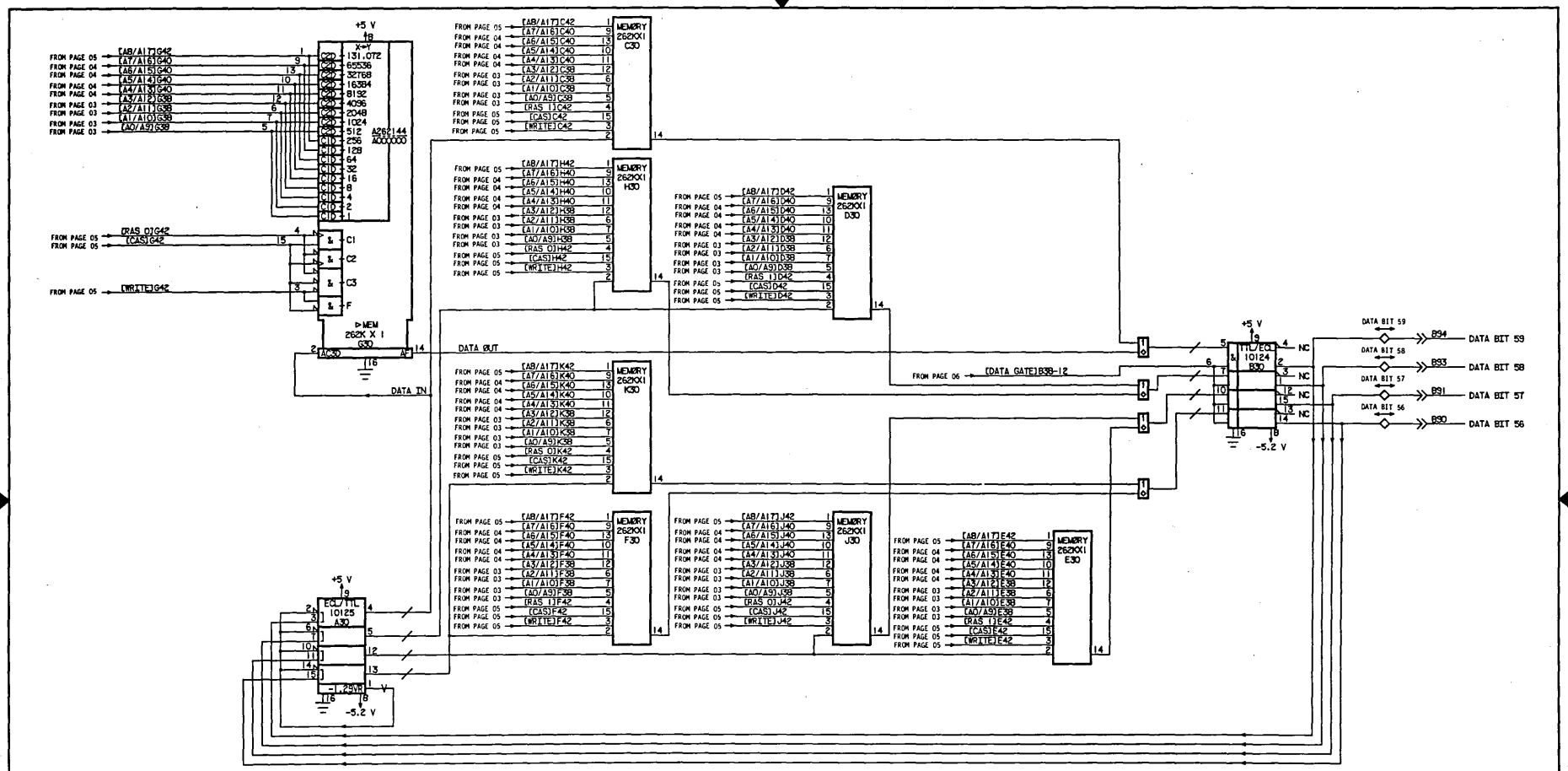

NOTES:

1. ALSO USED FOR REFRESH.
2. CONNECTOR PINS B94, B93, B91, AND B90 ARE NOT TERMINATED.
3. GHJK ROWS USE RAS 0
   CDEF ROWS USE RAS 1.

DEVELOPMENT DIVISION	LEVEL 4 DIAGRAM SCHEMATIC 524K X 72 3HBH. MOCR MEMORY MODULE	246T0814	A
		CM 4.3-19	21

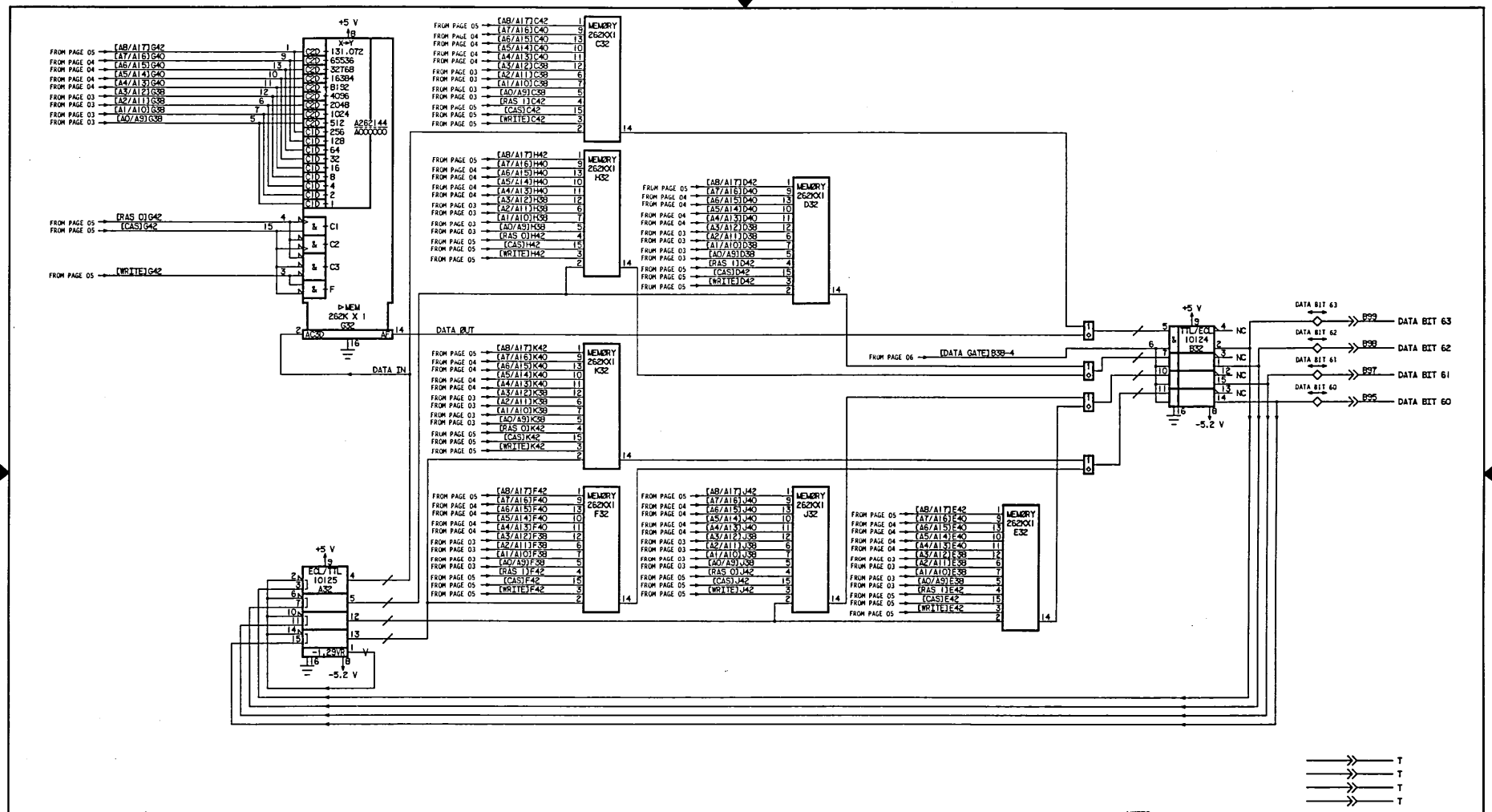

NOTES:

1. ALSO USED FOR REFRESH.
2. CONNECTOR PINS B99, B98, B97, AND B95 ARE NOT TERMINATED.
3. GHUK ROWS USE RAS 0
   CDEF ROWS USE RAS 1.

DEVELOPMENT DIVISION	LEVEL 4 DIAGRAM SCHEMATIC 524K X 72 3HEH. MOCR MEMORY MODULE	2467C814	A
		CM 4.3-20	22

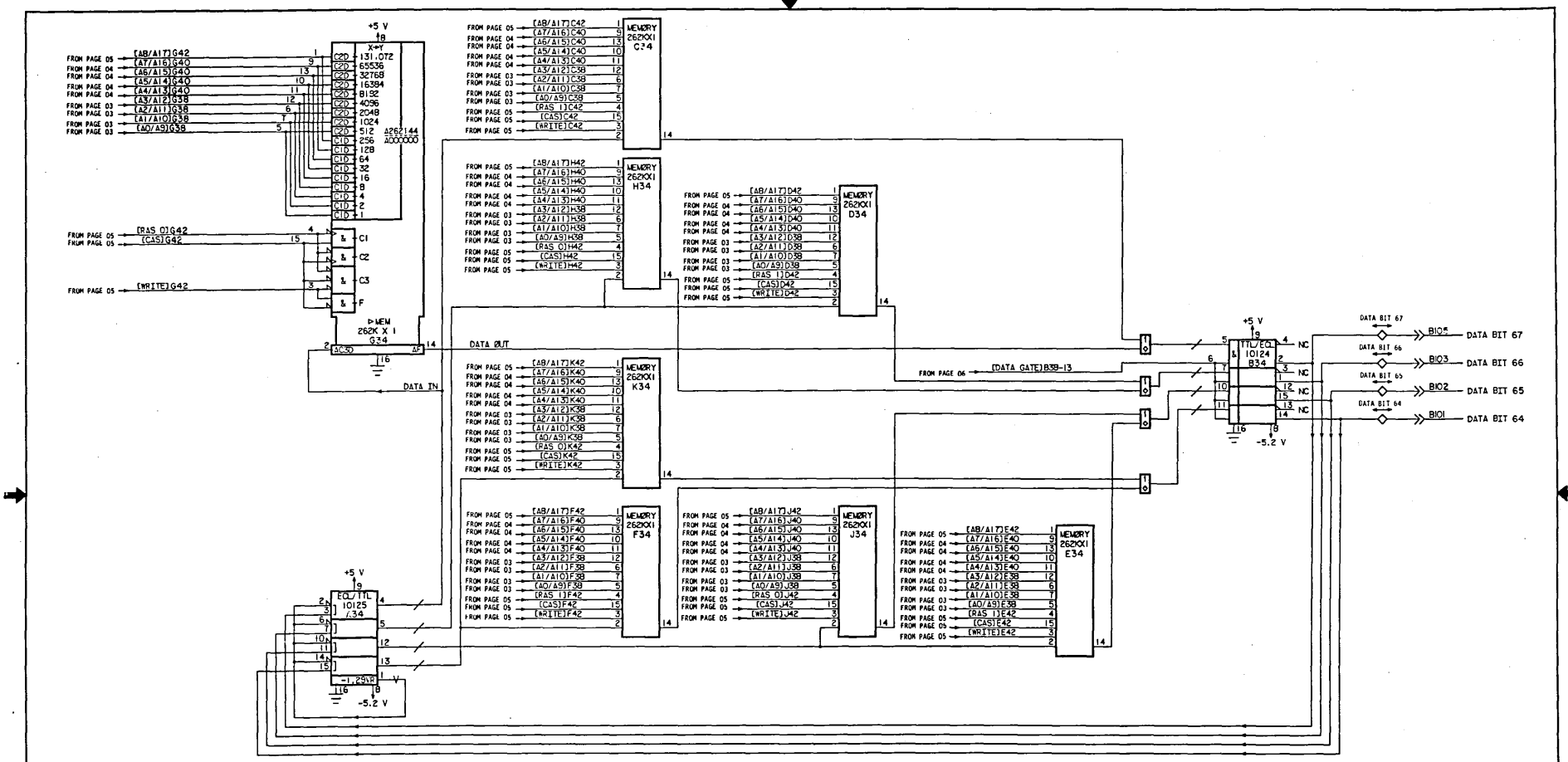

NØTES:

1. ALSØ USED FØR REFRESH.
2. CØNNECTØR PINS BIO5, BIO3, BIO2, AND BIO1 ARE NØT TERMINATED.
3. GHJK RØWS USE RAS 0
   CDEF RØWS USE RAS 1.

DEVELØPMENT DIVISIØN	LEVEL 4 DIAGRAM SCHEMATIC 524K X 72 3HEH. MØCR MEMØRY MØDULE	24670814	A
		CM 4.3-21	23

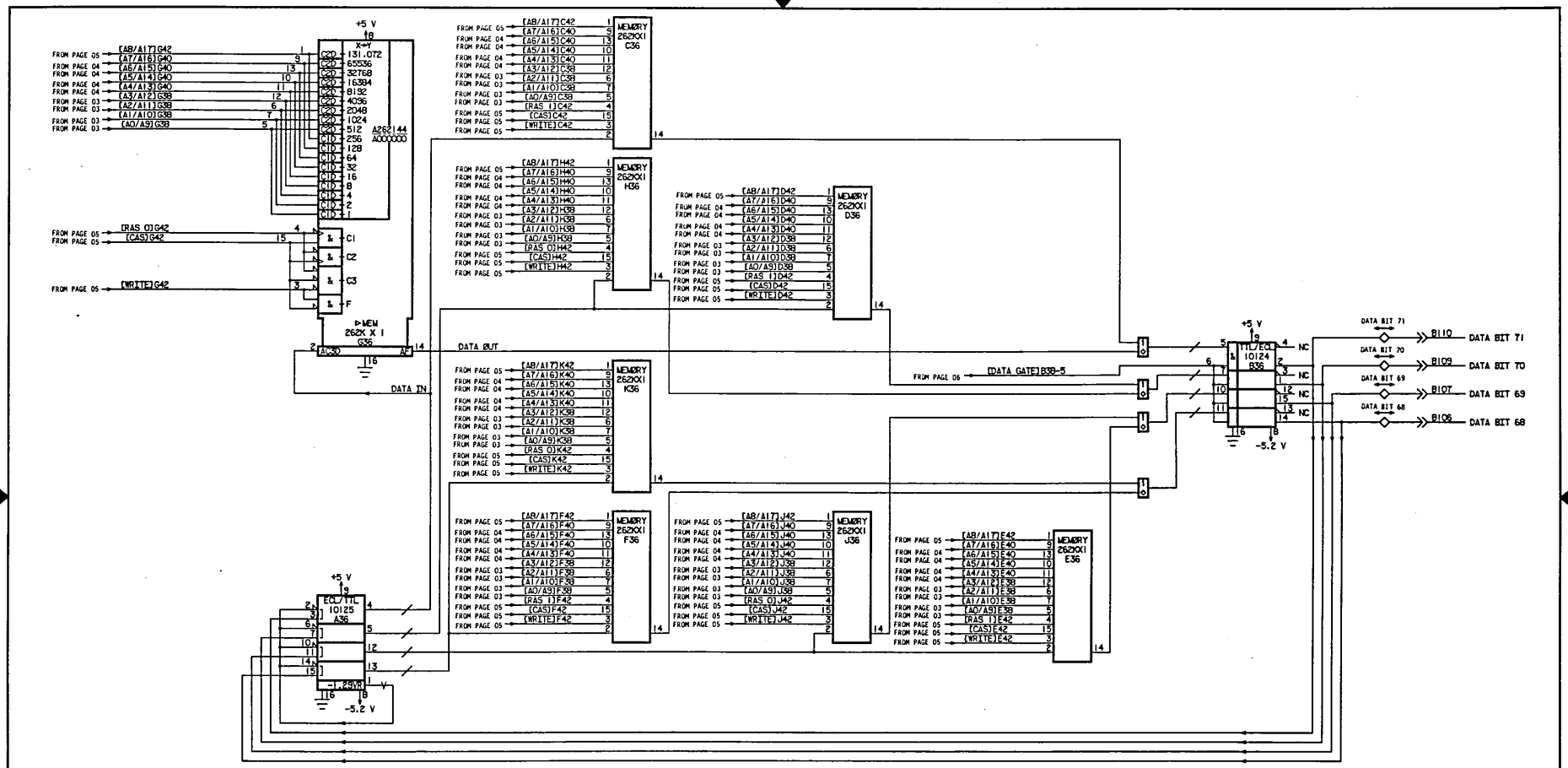

NOTES:

1. ALSO USED FOR REFRESH.
2. CONNECTOR PINS B110, B109, B107, AND B106 ARE NOT TERMINATED.
3. GHJK ROWS USE RAS 0
   CDEF ROWS USE RAS 1.

DIGITAL EQUIPMENT CORPORATION	LEVEL 4 DIAGRAM SCHEMATIC 524K X TZ 3HEH, MSCR MEMORY MODULE	2467C814	A
DEVELOPMENT DIVISION		CM 4.3-22	24

CORPORATE HEADQUARTERS, P.O. BOX O, MINNEAPOLIS, MINN 55440
SALES OFFICES AND SERVICE CENTERS IN MAJOR CITIES THROUGHOUT THE WORLD

LITHO IN U.S.A.

CONTROL DATA