

L

Sockets and Edge Card Connectors

0.762mm (.030") Pitch HiSpec™ (Slot 2) Edge Card Connector Double-Sided Dual Read-Out

71109

330 Circuit, Vertical

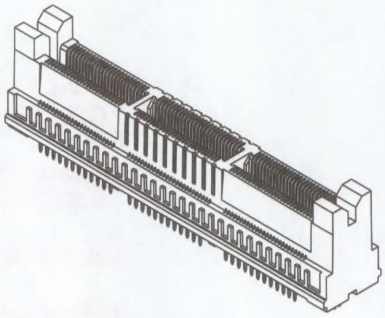

FEATURES AND SPECIFICATIONS

Features and Benefits

- For use with Intel Pentium* II Xeon processor
- Intel qualified design
- Available with either plastic pegs or metal forklocks
- Low mating force and SMT process compatible
- High conductivity contact supports high speed electrical performance
- Unique 3 level complementary contact system offers outstanding electrical performance while allowing for wider pad tolerances on PCB

Reference Information

Product Specification: PS-71109-9990
Packaging Type: Tray
UL File No.: 97129UL
CSA File No.: LR19980-483
Designed In: Inches

Electrical

Voltage: 30V RMS @ 60 Hz
Current: 0.5A max.
Contact Resistance: 5mΩ max.
Insulation Resistance: 1000 MΩ min.

Mechanical

Mating Force: 156N max.
Unmating Force: 89N max.
Durability: 50 cycles

Physical

Housing: Glass-filled LCP, 94V-0
Contact Material: Copper Alloy
Plating: 30µ" Gold
Operating Temperature: -40 to +85°C

CATALOG DRAWING (FOR REFERENCE ONLY)

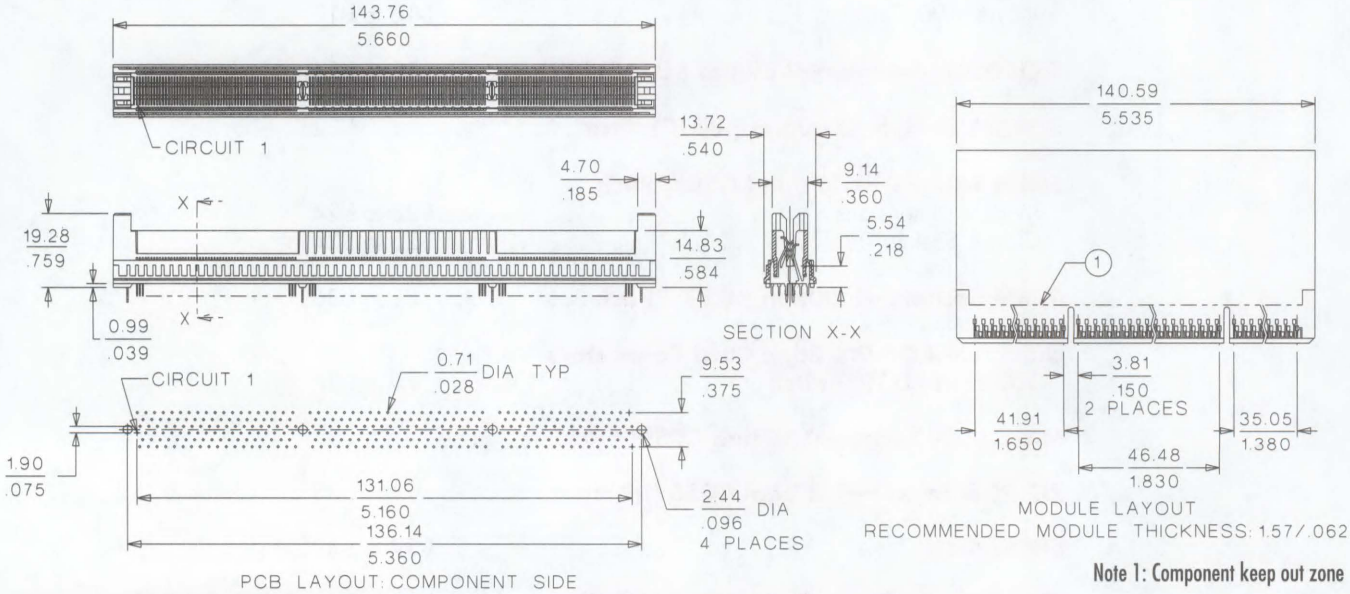

Note 1: Component keep out zone

ORDERING INFORMATION AND DIMENSIONS

Circuits	Order No.	PC Tail Length	PCB Hold Down
330	71109-5005	2.29 (.090)	Metal Forklock
	71109-5006	2.92 (.115)	Metal Forklock
	71109-5007	3.56 (.140)	Metal Forklock
	71109-2005	2.29 (.090)	Plastic Peg
	71109-2006	2.92 (.115)	Plastic Peg
	71109-2007	3.56 (.140)	Plastic Peg

* Intel and Pentium are registered trademarks of Intel Corporation

0.762mm (.030") Pitch HiSpec™ Edge Card Connector Double-Sided Dual Read-Out

71109

220, 360 and 390 Circuits Vertical

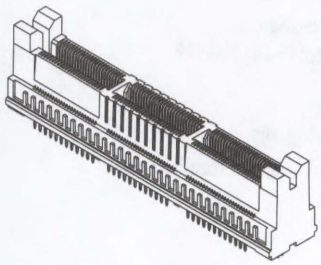

FEATURES AND SPECIFICATIONS

Features and Benefits

- For use in high speed bus and memory board applications
- Available with either plastic pegs or metal forklocks
- Low mating force and SMT process compatible
- Unique 3 level complementary contact system offers outstanding electrical performance while allowing for wider pad tolerances on PCB
- High conductivity contact supports high speed electrical performance
- 44 signal and 22 power ground contacts per inch

Reference Information

Product Specification: PS-71109-9999
Packaging Type: Tray
UL File No.: 97129UL
CSA File No.: LR19980-483
Designed In: Inches

Electrical

Voltage: 30V RMS @ 60 Hz
Current: 0.5A max.
Contact Resistance: 10mΩ max.
Insulation Resistance: 1000 MΩ min.

Mechanical

Mating Force: 14N (3.2 lb) per 30 contacts
Unmating Force: 8N (1.8 lb) per 30 contacts max.
Durability: 50 cycles

Physical

Housing: Glass-filled LCP, 94V-0
Contact Material: Copper Alloy
Plating: Gold flash over 30μ" Palladium Nickel
Operating Temperature: -40 to +85˚C

CATALOG DRAWING (FOR REFERENCE ONLY)

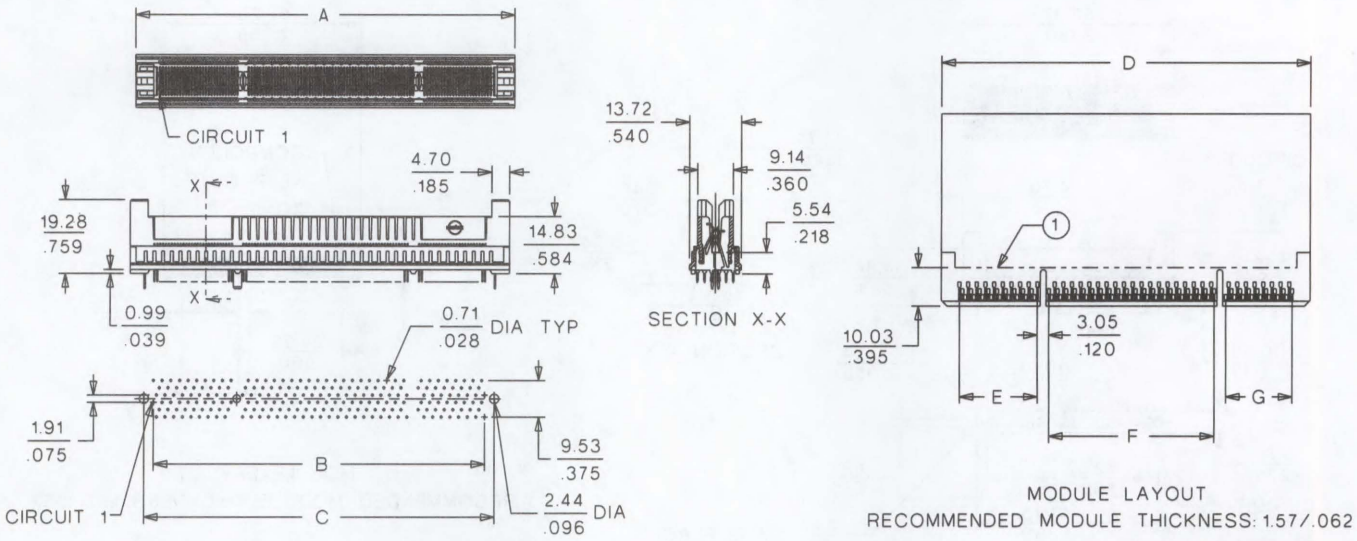

Note 1: Component keep out zone

ORDERING INFORMATION AND DIMENSIONS

Circuits	Order No.	PC Tail Length	PCB Hold Down	Dimension						
				A	B	C	D	E	F	G
220	71109-5001	2.29 (.090)	Metal Forklock	100.33 (3.950)	87.63 (3.450)	92.71 (3.650)	97.15 (3.825)	20.57 (.810)	43.72 (1.710)	17.53 (.690)
220	71109-5002	2.92 (.115)	Metal Forklock	100.33 (3.950)	87.63 (3.450)	92.71 (3.650)	97.15 (3.825)	20.57 (.810)	43.72 (1.710)	17.53 (.690)
220	71109-5003	3.56 (.140)	Metal Forklock	100.33 (3.950)	87.63 (3.450)	92.71 (3.650)	97.15 (3.825)	20.57 (.810)	43.72 (1.710)	17.53 (.690)
360	71109-5029	2.92 (.115)	Metal Forklock	155.19 (6.110)	142.49 (5.610)	147.57 (5.810)	152.02 (5.985)	48.77 (1.920)	46.48 (1.830)	39.62 (1.560)
390	71109-5025	2.29 (.090)	Metal Forklock	166.62 (6.560)	153.92 (6.060)	159.00 (6.260)	163.45 (6.435)	53.34 (2.100)	46.48 (1.830)	46.48 (1.830)
390	71109-5026	2.92 (.115)	Metal Forklock	166.62 (6.560)	153.92 (6.060)	159.00 (6.260)	163.45 (6.435)	53.34 (2.100)	46.48 (1.830)	46.48 (1.830)

Note: For other circuit sizes, contact Molex

0.762mm (.030") Pitch HiSpecGS™ Memory Expansion Card Edge Connector Double-sided Dual Read-out

74191

108 Circuit, Vertical

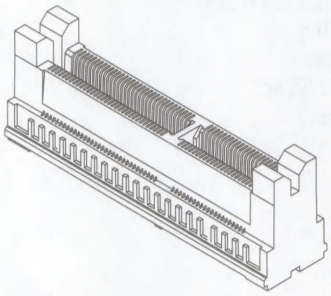

FEATURES AND SPECIFICATIONS

Features and Benefits

- 2 level "ground by design" contact system offers outstanding electrical performance while allowing for wider pad tolerances on PCB
- Ground-signal-ground-signal format provides excellent signal integrity
- For use in Rambus single channel memory expansion card (MECC) applications
- Low mating force and Surface Mount Compatible
- 32 signal and 34 power/ground contacts per inch for a total of 108 circuits
- For 28Ω impedance systems

Reference Information

Product Specification: PS-74191-9999
Packaging: Tray
UL File No.: 97129UL
CSA File No.: LR 19980-483
Mates With: Rambus Memory Expansion Card
Designed In: inches

Electrical

Voltage: 30V RMS at 60 Hz
Current: Power/Ground Contacts—1.75A
Signal Contacts—0.5A
Contact Resistance: 10 mΩ max.
Dielectric Withstanding Voltage: 400V AC
Insulation Resistance: 1000 MΩ min.

Mechanical

Mating Force: 17.3N (3.89 lb) per 30 contacts max.
Unmating Force: 9.3N (2.09 lb) per 30 contacts max.
Durability: 50 cycles

Physical

Housing: Black LCP, UL 94V-0
Contact: Copper Alloy
Plating: 30μ" Gold
Operating Temperature: -40 to +85°C

CATALOG DRAWING (FOR REFERENCE ONLY)

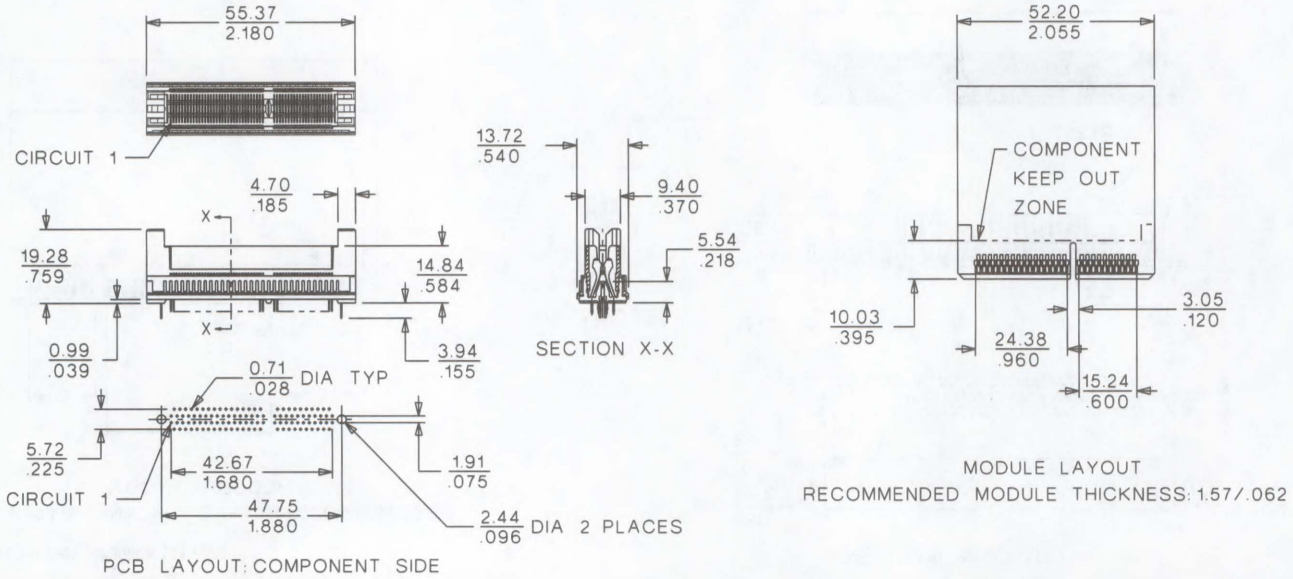

ORDERING INFORMATION AND DIMENSIONS

Circuits	Order No.	PC Tail Length	PCB Hold Down
108	74191-0007	2.29 (.090)	2 Forklocks
108	74191-0003	2.92 (.115)	2 Forklocks

0.762mm (.030") Pitch HiSpecGS™ Memory Expansion Card Edge Connector Double-sided Dual Read-out

74191

242 Circuit, Vertical

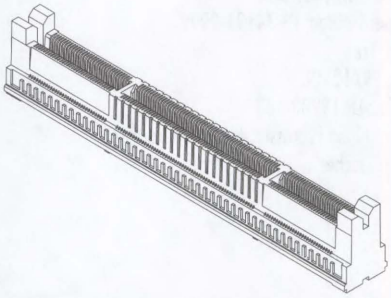

FEATURES AND SPECIFICATIONS

Features and Benefits

- 2 level "ground by design" contact system offers outstanding electrical performance while allowing for wider pad tolerances on PCB
- Ground-signal-ground-signal format provides excellent signal integrity
- For use in Rambus dual channel memory expansion card (MECC) applications
- Low mating force and SMT process compatible
- 32 signal and 34 power ground contacts per inch for a total of 242 circuits
- For 28Ω impedance systems

Reference Information

Product Specification: PS-74191-9999
Packaging: Tray
UL File No.: 97129UL
CSA File No.: LR 19980-483
Mates With: Memory Expansion Card
Designed In: inches

Electrical

Voltage: 30V RMS at 60 Hz
Current: Power/Ground Contacts—1.75A
Signal Contacts—0.5A
Contact Resistance: 10mΩ max.
Dielectric Withstanding Voltage: 400V AC
Insulation Resistance: 1000 MΩ min.

Mechanical

Mating Force: 17.3N (3.89 lb) per 30 contacts max.
Unmating Force: 9.3N (2.09 lb) per 30 contacts max.
Durability: 50 cycles

Physical

Housing: Black LCP, UL 94V-0
Contact: Copper Alloy
Plating: 30μ" Gold
Operating Temperature: -40 to +85 °C

CATALOG DRAWING (FOR REFERENCE ONLY)

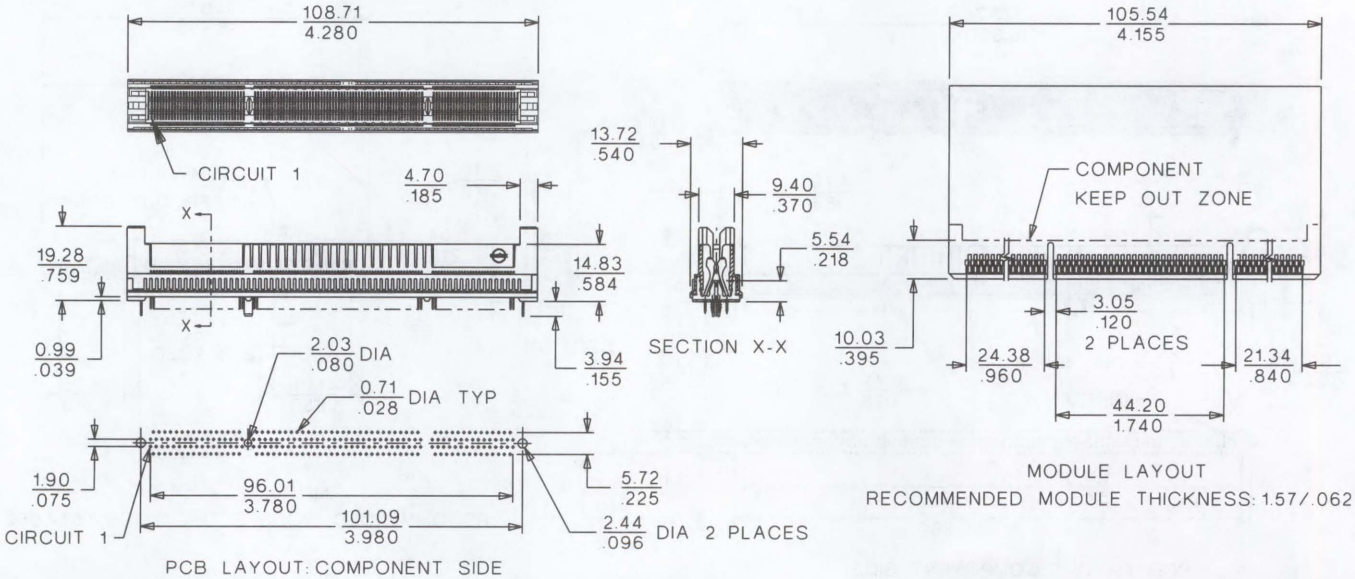

ORDERING INFORMATION AND DIMENSIONS

Circuits	Order No.	PC Tail Length	PCB Hold Down
242	74191-0005	2.29 (.090)	3 Forklocks
242	74191-0004	2.92 (.115)	3 Forklocks
242	74191-0006	2.29 (.090)	2 Forklocks, 1 Peg
242	74191-0001	2.92 (.115)	2 Forklocks, 1 Peg

0.762mm (.030") Pitch HiSpecGS™ Microprocessor Card Edge Connector Double-Sided Dual Read-Out

74191

330 Circuit, Vertical

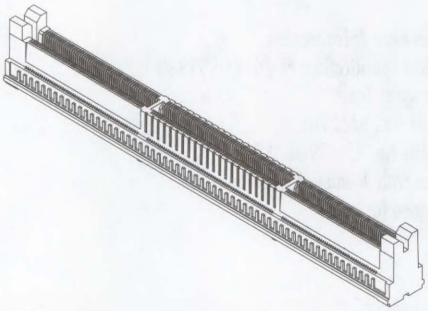

FEATURES AND SPECIFICATIONS

Features and Benefits

- 2 level "ground by design" contact system offers outstanding electrical performance while allowing for wider pad tolerances on PCB
- Ground-signal-ground-signal format provides excellent signal integrity
- For use in Alpha Processor, Inc. microprocessor applications
- Low mating force and Surface Mount Compatible
- 32 signal and 34 power ground contacts per inch for a total of 330 circuits
- For 50Ω impedance systems

Reference Information

Product Specification: PS-74191-9999
Packaging: Tray
UL File No.: 97129UL
CSA File No.: LR 19980-483
Mates With: Alpha Processor, Inc. microprocessor
Designed In: inches

Electrical

Voltage: 30V RMS at 60 Hz
Current: Power/Ground Contacts—1.75A
Signal Contacts—0.5A
Contact Resistance: 10mΩ max.
Dielectric Withstanding Voltage: 400V AC
Insulation Resistance: 1000 MΩ min.

Mechanical

Mating Force: 17.3N (3.89 lb) per 30 contacts max.
Unmating Force: 9.3N (2.09 lb) per 30 contacts max.
Durability: 50 cycles

Physical

Housing: Black LCP, UL 94V-0
Contact: Copper Alloy
Plating: 30μ" Gold
Operating Temperature: -40 to +85°C

CATALOG DRAWING (FOR REFERENCE ONLY)

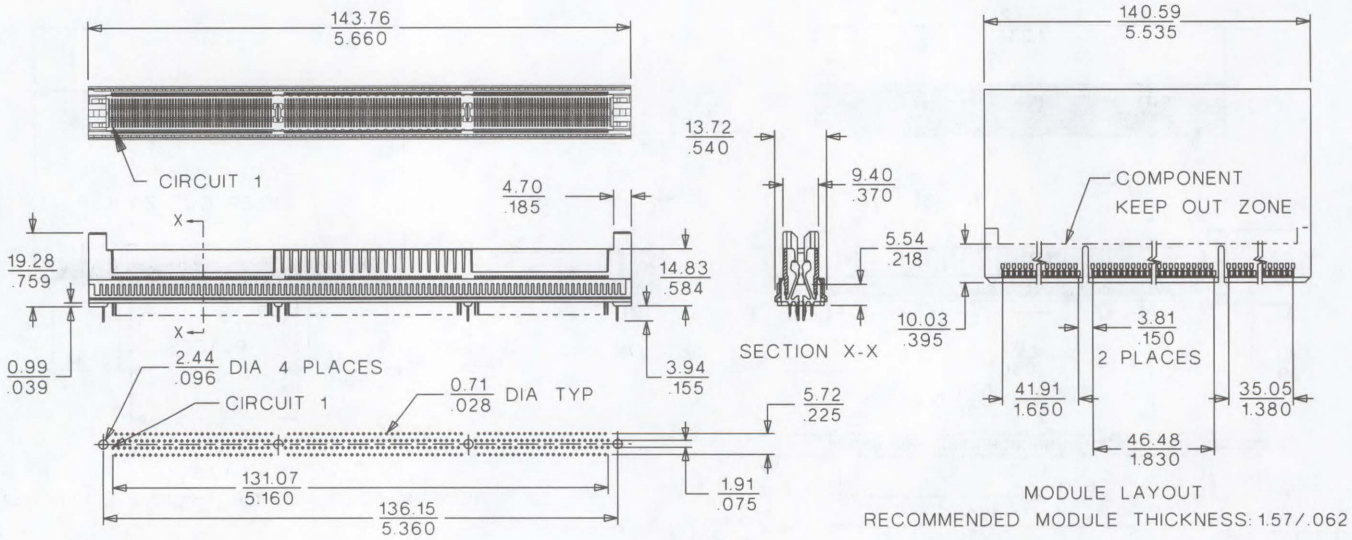

ORDERING INFORMATION AND DIMENSIONS

Circuits	Order No.	PC Tail Length	PCB Hold Down
330	74191-0002	2.92 (.115)	4 Forklocks
	74191-0008	2.29 (.090)	4 Forklocks

1.27mm (.050") Pitch DDR DIMM Socket

71243

Vertical, Single Key

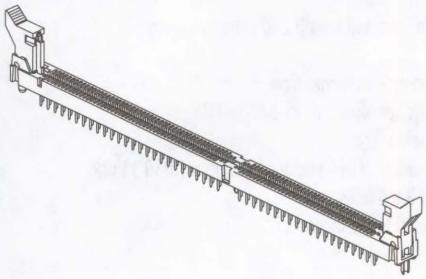

FEATURES AND SPECIFICATIONS

Features and Benefits

- Molded-in identification for voltage and pin #1
- Dual ejector latches for easy module removal
- Module pre-alignment feature prevents mismating
- Palladium Nickel with Gold flash plating for improved reliability
- Stamped and formed contacts reduce debris at interface
- Added contact wide for improved reliability

Reference Information

Product Specification: PS-71243
Packaging: Tray
UL File No.: E29179
CSA File No.: LR 19980A-366
Mates With: JEDEC MO-206 modules
Designed In: Inches

Electrical

Voltage: 100V
Current: 1.0A
Contact Resistance: 30mΩ max.
Dielectric Withstanding Voltage: 500V AC
Insulation Resistance: 1000 MΩ min.

Mechanical

Mating Force: 1.6N (0.34 lb)
Durability: 25 cycles min.

Physical

Housing and Latch: High-temperature resistant thermoplastic, UL 94V-0
Contact: Phosphor Bronze
Plating: Selective Palladium Nickel with Gold flash with Tin/Lead on solder tails
Operating Temperature: -40 to +85°C

CATALOG DRAWING (FOR REFERENCE ONLY)

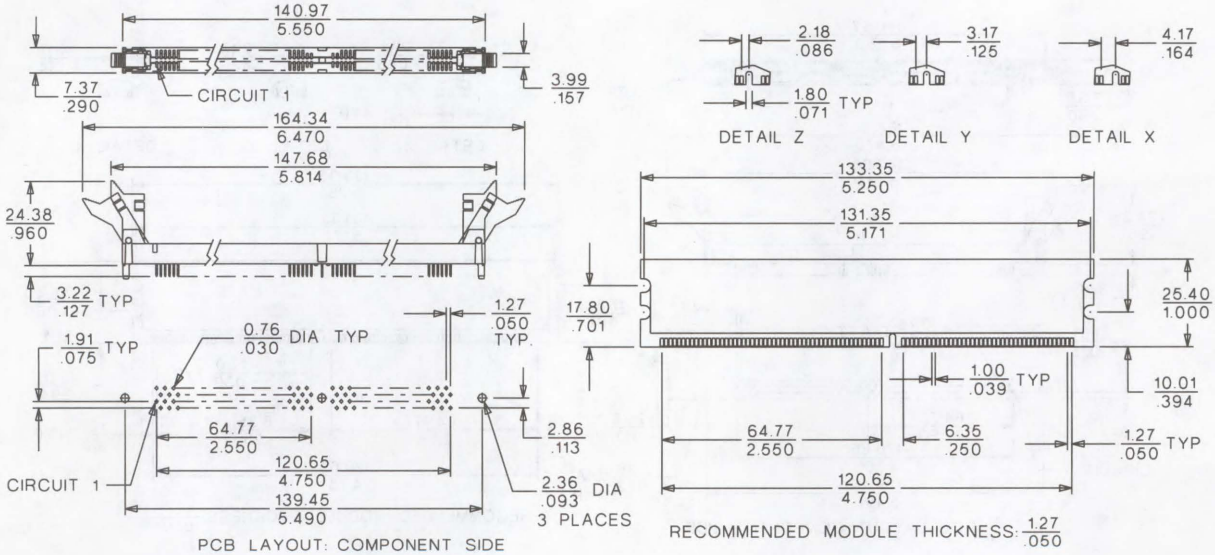

ORDERING INFORMATION AND DIMENSIONS

Circuits	Order No.	Voltage Key	Voltage
184	71243-3001	Detail Y	1.8V
	71243-3002	Detail Z	2.5V
	71243-3003	Detail X	3.3V

1.27mm (.050") Pitch DDR DIMM Socket

87636

Vertical, Multiple Keys, Forklock Version

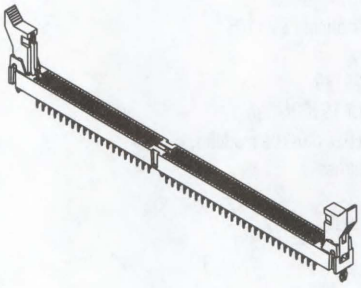

FEATURES AND SPECIFICATIONS

Features and Benefits

- Accepts JEDEC MO-206 modules for 100% industry compatibility
- Dual ejector latches for easy module removal with features to minimize micro motion
- Added contact wipe for improved reliability
- Forklocks provide PCB retention during and after soldering
- Optional tail length and voltage keying

Reference Information

Product Specification: PS-87736-003
Packaging: Tray
Mates With: JEDEC standard 1.27mm (.050") thick PCB modules
Designed In: Millimeters

Electrical

Voltage: 125V AC
Current: 1.0A
Contact Resistance: 40mΩ max.
Dielectric Withstanding Voltage: 500V AC
Insulation Resistance: 1000 MΩ min.

Mechanical

Contact Retention to Housing: 3.92N (.88 lb) min.
Insertion Force to PCB: 24.52N (5.51 lb)
Mating Force: 161.81N (36.38 lb) max.
Normal Force: 0.49N (.11 lb)
Durability: 50 cycles

Physical

Housing: High-temperature Thermoplastic, UL 94V-0
Contact: Phosphor Bronze
Plating: Contact Area—0.38μm (15μ") Gold
Solder Tails Area—1.91μm (75μ") Tin/Lead
Underplating—Nickel
Operating Temperature: -10 to +85°C

CATALOG DRAWING (FOR REFERENCE ONLY)

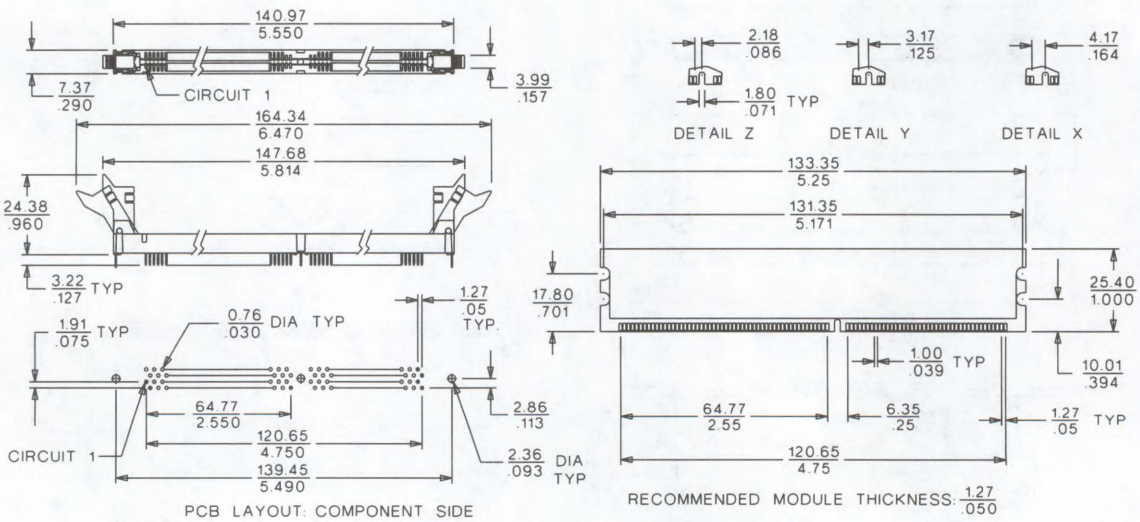

ORDERING INFORMATION AND DIMENSIONS

Circuits	Order No.	Voltage Key	Tail Length
184	87636-0001	Center (1.8V)	3.23 (.127)
	87636-0002	Left (2.5V)	3.23 (.127)
	87636-0003	*	3.23 (.127)
	87636-0011	Center (1.8V)	2.67 (.105)
	87636-0012	Left (2.5V)	2.67 (.105)
	87636-0013	*	2.67 (.105)

*Contact Molex for voltage key

1.27mm (.050") Pitch DDR DIMM Socket

87623

25° Angle, Low Profile Single Key, With Forklocks And Plastic Peg

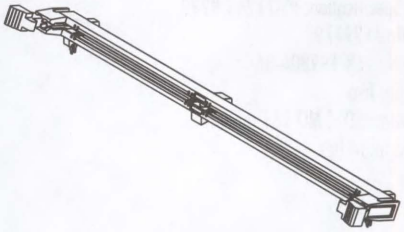

FEATURES AND SPECIFICATIONS

Features and Benefits

- Accepts standard JEDEC MO-206 modules
- Dual ejector latches align modules for insertion and provide an audible click when it is in the closed position
- Forklocks provide PCB retention during and after soldering
- Baseplate ensures PC tail true position
- Tight stacking distances of 22.86mm (.900") for typical SOJ package and 13.34mm (.525") for TSOP package
- Several options for keying and solder tail length

Reference Information

Product Specification: PS-87623-002
Packaging: Tray
Mates With: JEDEC standard 1.27mm (.050") thick PCB module
Designed In: Millimeters

Electrical

Voltage: 50V
Current: 1.0A
Contact Resistance: 30mΩ max.
Dielectric Withstanding Voltage: 500V AC
Insulation Resistance: 1000 MΩ min.

Mechanical

Insertion Force to PCB: 44.48N (10.0 lb) max.
Mating Force: 0.78N (0.175 lb) per contact max.
Unmating Force: 0.07N (0.0157 lb) per contact min.
Contact Retention to Housing: 4.45N (1.0 lb) min.
Durability: 25 cycles max.

Physical

Housing: Black high-temperature thermoplastic, UL 94V-0
Contact: Copper Alloy
Plating: Contact Area—Selective Gold (See Table)
Solder Tail Area—Tin/Lead
Underplating—Nickel
Operating Temperature: -40 to +85°C

CATALOG DRAWING (FOR REFERENCE ONLY)

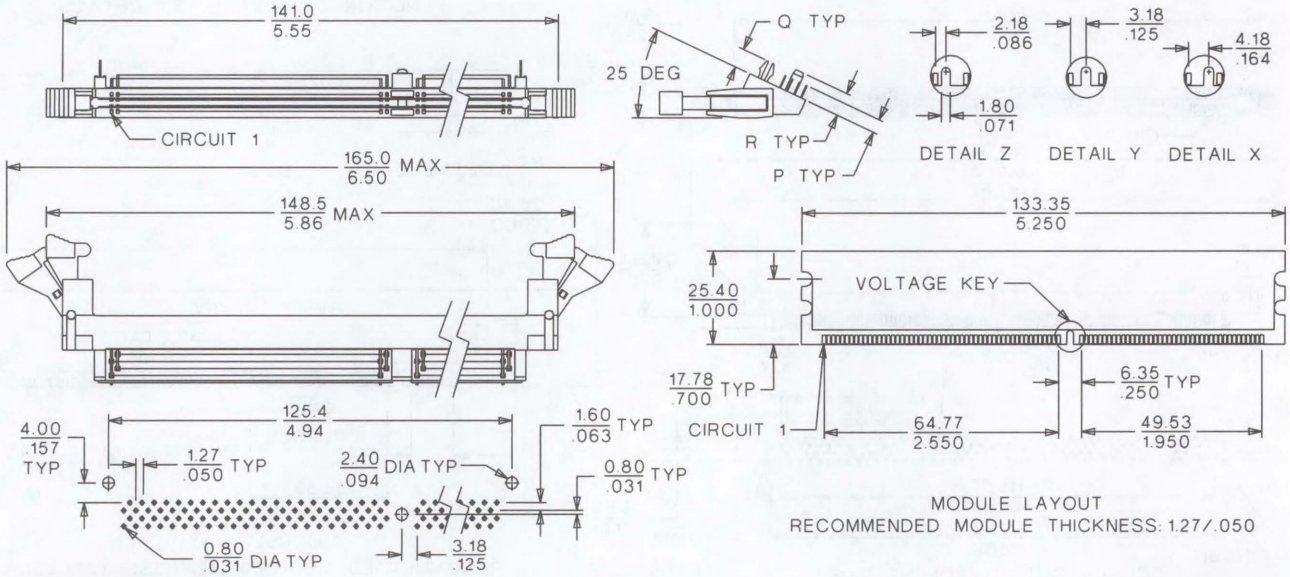

ORDERING INFORMATION AND DIMENSIONS

Circuits	Order No.		Voltage Key	Dimension		
	15µ" Select Gold	30µ" Select Gold		P	Q	R
184	87623-0001	87623-0101	Left (2.5V)	2.79 (.110)	3.18 (.125)	3.18 (.125)
	87623-0011	87623-0111	Left (2.5V)	3.18 (.125)	3.94 (.155)	4.83 (.190)

1.27mm (.050") Pitch DIMM 8-Byte DRAM Socket

71251

Vertical Multi-Key Plastic Peg Version

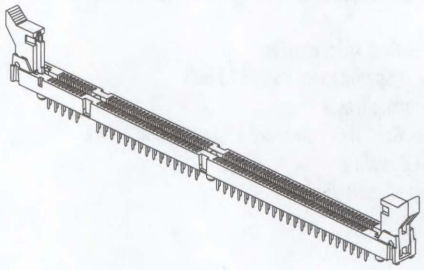

FEATURES AND SPECIFICATIONS

Features and Benefits

- Accepts JEDEC MO-161 modules for 100% industry compatibility
- Dual ejector latches for easy module removal
- Latches include feature to minimize micro motion
- Palladium Nickel with Gold flash plating for improved reliability
- Added contact wipe for improved reliability
- Optional voltage and function keying

Reference Information

Product Specification: PS-71243-9999
UL File No.: E29179
CSA File No.: LR-19980A-366
Packaging: Tray
Mates With: JEDEC MO-161 modules
Designed In: Inches

Electrical

Voltage: 100V
Current: 1.0A
Contact Resistance: 30mΩ max.
Dielectric Withstanding Voltage: 500V AC
Insulation Resistance: 1000 MΩ min.

Mechanical

Mating Force: 1.6N (0.35lb) per pair
Durability: 25 cycles min.

Physical

Housing and Latch: High temperature resistant thermoplastic, UL 94V-0
Contact: Phosphor Bronze
Plating: Selective Palladium Nickel with Gold flash with Tin/Lead on solder tails
Operating Temperature: -40 to +85°C

CATALOG DRAWING (FOR REFERENCE ONLY)

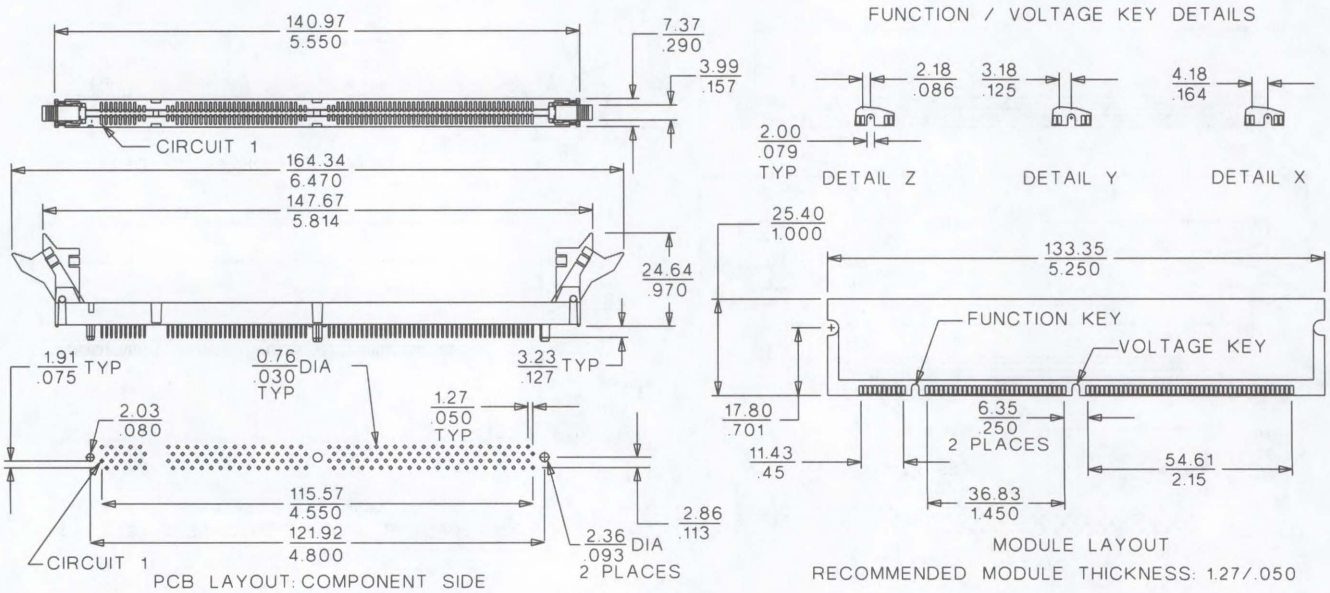

ORDERING INFORMATION

Circuits	Order No.	Function Key	Voltage Key	Description
168	71251-0001	Detail Y	Detail Y	DRAM 3.3V
	71251-0004	Detail Y	Detail Z	DRAM 5.0V
	71251-0016	Detail Z	Detail Y	SDRAM 3.3V
	71251-0017	Detail Z	Detail Z	SDRAM 5.0V
	71251-0012	Detail X	Detail Y	Unbuffered 3.3V
	71251-0013	Detail X	Detail Z	Unbuffered 5.0V

1.27mm (.050") Pitch DIMM 8-Byte DRAM Socket

71736

Vertical, Multi-Key Forklock Version

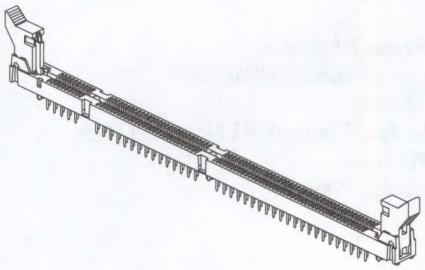

FEATURES AND SPECIFICATIONS

Features and Benefits

- Accepts JEDEC MO-161 modules for 100% industry compatibility
- Dual ejector latches for easy module removal
- Latches include feature to minimize micro motion
- Palladium Nickel with Gold flash plating for improved reliability
- Added contact wipe for improved reliability
- Optional voltage and function keying

Reference Information

Product Specification: PS-71243-9999
UL File No.: E29179
CSA File No.: LR-19980A-366
Packaging: Tray
Mates With: JEDEC MO-161 modules
Designed In: Inches

Electrical

Voltage: 100V
Current: 1.0A
Contact Resistance: 30mΩ max.
Dielectric Withstanding Voltage: 500V AC
Insulation Resistance: 1000 MΩ min.

Mechanical

Mating Force: 1.6N (0.35lb) per pair
Durability: 25 cycles min.

Physical

Housing and Latch: High temperature resistant thermoplastic, UL 94V-0
Contact: Phosphor Bronze
Forklock: Stainless Steel
Plating: Selective Palladium Nickel with Gold flash with Tin/Lead on solder tails
Operating Temperature: -40 to +85°C

CATALOG DRAWING (FOR REFERENCE ONLY)

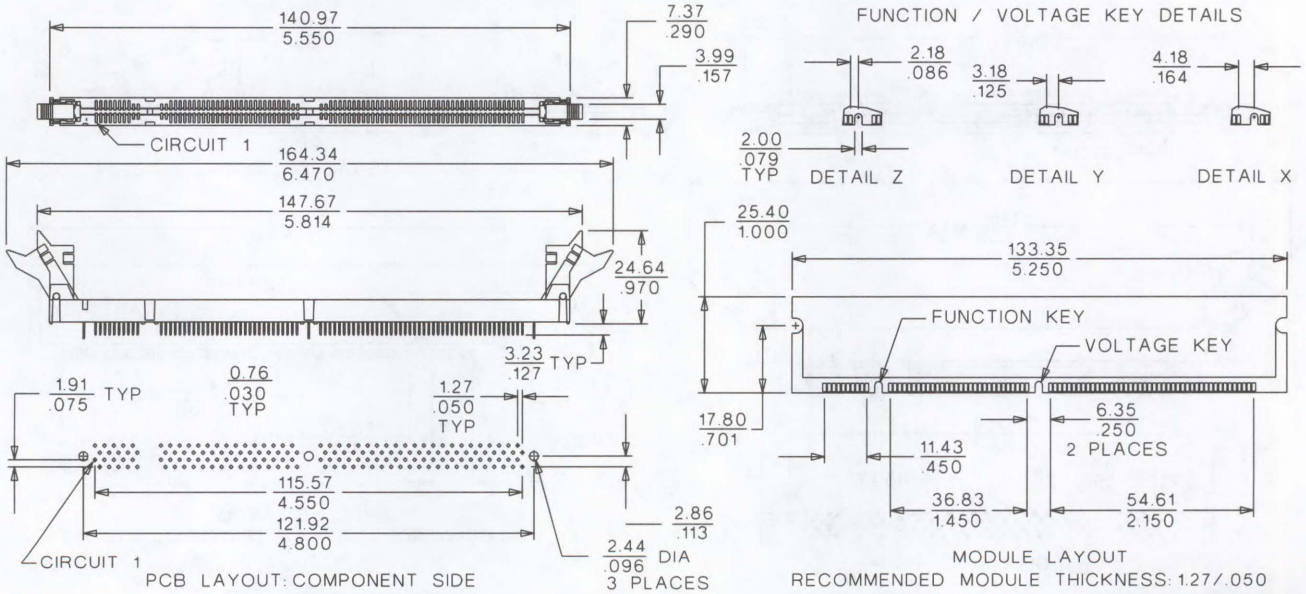

ORDERING INFORMATION

Circuits	Order No.	Function Key	Voltage Key	Description
168	71736-0001	Detail Y	Detail Y	DRAM 3.3V
	71736-0002	Detail Y	Detail Z	DRAM 5.0V
	71736-0006	Detail Z	Detail Y	SDRAM 3.3V
	71736-0007	Detail Z	Detail Z	SDRAM 5.0V
	71736-0011	Detail X	Detail Y	Unbuffered 3.3V
	71736-0005	Detail X	Detail Z	Unbuffered 5.0V

1.27mm (.050") Pitch DIMM 8-Byte Socket

87587

168 Circuit, Low Profile (25°) Multi-Key, with Forklocks and Plastic Peg

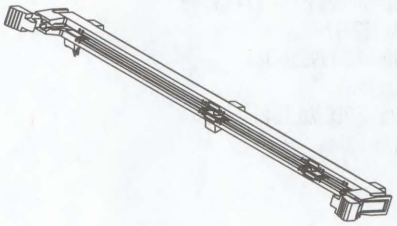

FEATURES AND SPECIFICATIONS

Features and Benefits

- Accepts Standards JEDEC MO-161 modules
- Dual ejector latches align modules for insertion and provide an audible click when in the closed position
- Forklocks provide PCB retention during and after soldering
- Base-plate ensures PC tail true position
- Tight stacking distances: 22.86mm (.900") for typical SOJ packaging, 13.34mm (.525") for TSOP packaging
- Several options for keying and solder-tail length

Reference Information

Product Specification: PS-87587-007
Packaging: Tray
Mates With: JEDEC standard 1.27mm (.050") thick PCB module
Designed In: Millimeters

Electrical

Voltage: 100V
Current: 1.0A
Contact Resistance: 30mΩ max.
Dielectric Withstanding Voltage: 500V AC
Insulation Resistance: 1000 MΩ min.

Mechanical

Mating Force: 0.78N
Contact Retention to Housing: 4.45N min.
Durability: 25 cycles min.

Physical

Housing: Black, high-temperature thermoplastic, UL 94V-0
Contact: Copper Alloy
Plating: Contact—Gold or Gold-compatible over Nickel
Solder Tail—Tin/Lead over Nickel
Operating Temperature: -40 to +85°C

CATALOG DRAWING (FOR REFERENCE ONLY)

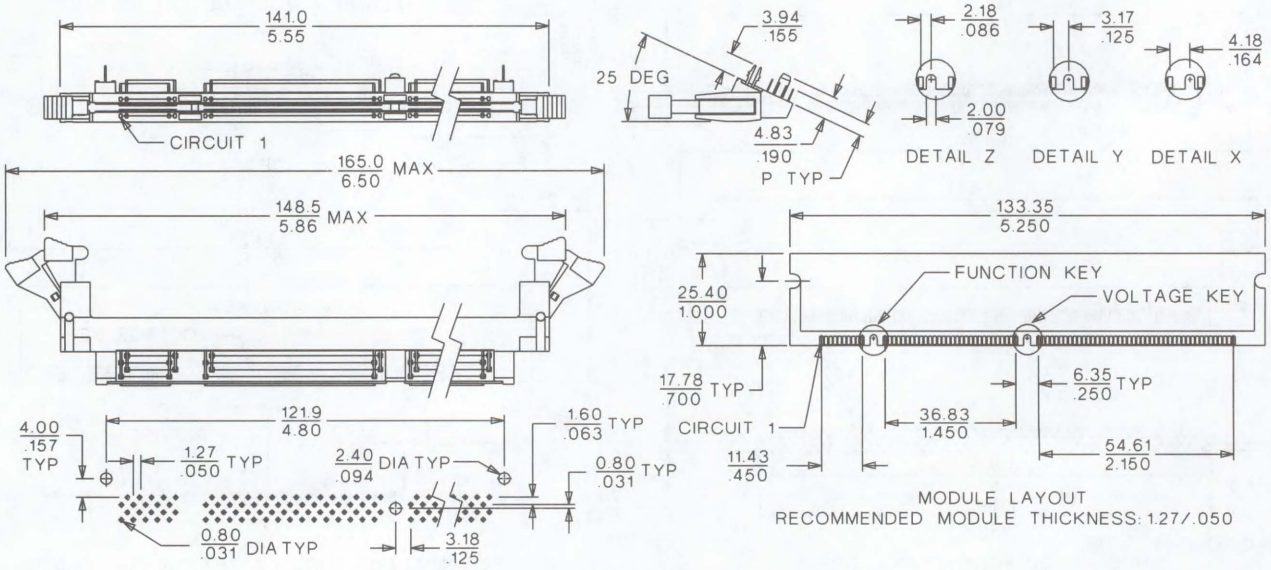

ORDERING INFORMATION AND DIMENSIONS

Circuits	Order No.		Function Key	Voltage Key	Dimension P	Recommended PCB Thickness
	15μ" Select Gold	30μ" Select Gold				
168	87587-0048	87587-0148	Left	Center (3.3V)	2.79 (.110)	2.19 (.086) max.
	87587-0049	87587-0149	Center	Center (3.3V)	2.79 (.110)	
	87587-0050	87587-0150	Right	Center (3.3V)	2.79 (.110)	
	87587-0057	87587-0157	Left	Center (3.3V)	3.18 (.125)	2.58 (.101) max.
	87587-0058	87587-0158	Center	Center (3.3V)	3.18 (.125)	
	87587-0059	87587-0159	Right	Center (3.3V)	3.18 (.125)	

1.27mm (.050") Pitch DIMM 8-Byte Socket

87609

168 Circuit, Right Angle, Multi-key, with Forklocks and Plastic Pegs

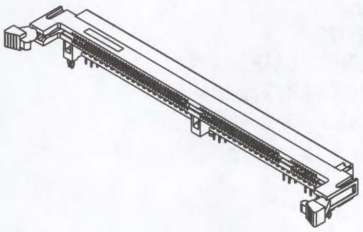

FEATURES AND SPECIFICATIONS

Features and Benefits

- Accepts JEDEC MO-161 modules for 100% industry compatibility
- Dual ejector latches align modules for insertion and ease module removal
- Robust pre-loaded contacts improved reliability
- Optional voltage and function keying

Reference Information

Product Specification: PS-87609-002
Packaging: Tray
Mates With: JEDEC standard 1.27mm (.050") thick PCB modules
Designed In: Millimeters

Electrical

Voltage: 125V AC
Current: 1.0A
Contact Resistance: 40mΩ max.
Dielectric Withstanding Voltage: 500V AC
Insulation Resistance: 1000 MΩ min.

Mechanical

Contact Retention to Housing: 3.92N (.88 lb) min.
Insertion Force to PCB: 49.04N (11.02 lb)
Mating Force: 147.10N (33.07 lb) max.
Normal Force: 0.49N (.11 lb)
Durability: 25 cycles max.

Physical

Housing: High-temperature Thermoplastic, UL 94V-0
Contact: Phosphor Bronze
Plating: Contact Area—0.38μm (15μ") Gold
Solder Tails Area—1.91μm (75μ") Tin/Lead
Underplating—Nickel
Operating Temperature: -10 to +85°C

CATALOG DRAWING (FOR REFERENCE ONLY)

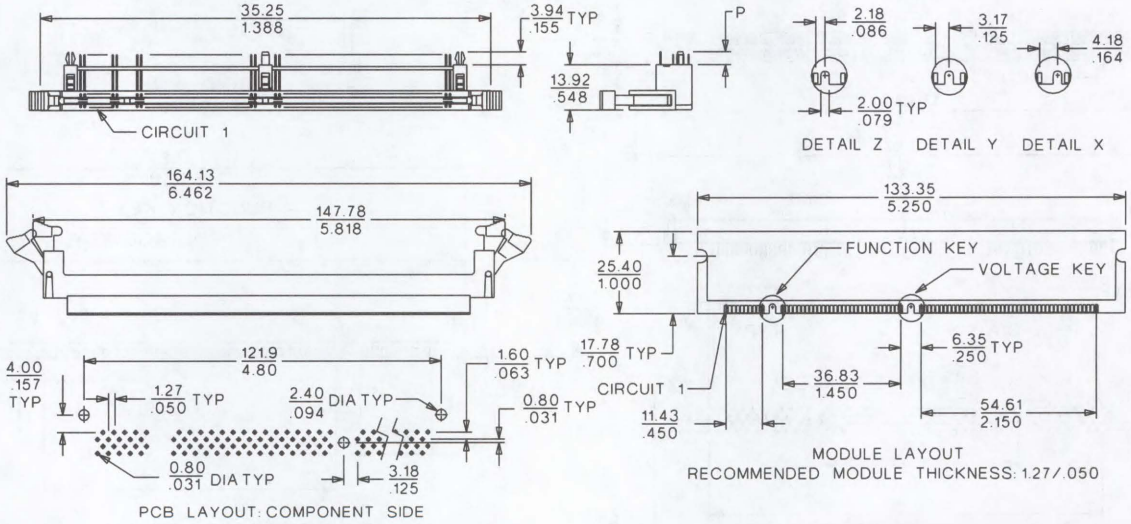

ORDERING INFORMATION AND DIMENSIONS

Circuits	Order No.	Function Key	Voltage Key	Tail Length (P)
168	87609-0048	Left	Center (3.3V)	2.79 (.110)
	87609-0049	Center	Center (3.3V)	2.79 (.110)
	87609-0050	Right	Center (3.3V)	2.79 (.110)
	87609-0057	Left	Center (3.3V)	3.18 (.125)
	87609-0058	Center	Center (3.3V)	3.18 (.125)
	87609-0059	Right	Center (3.3V)	3.18 (.125)
	87609-0066	Left	Center (3.3V)	3.56 (.140)
	87609-0067	Center	Center (3.3V)	3.56 (.140)
	87609-0068	Right	Center (3.3V)	3.56 (.140)

1.27mm (.050") Pitch 200 Circuit DIMM Socket

71251

Vertical, Multi-Key Plastic Peg Version

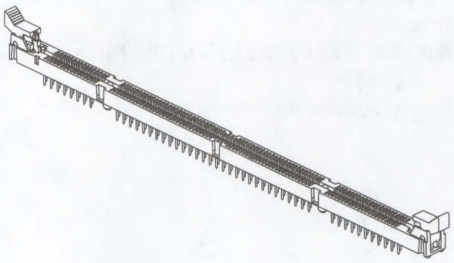

FEATURES AND SPECIFICATIONS

Features and Benefits

- Accepts JEDEC MO-172 modules for 100% industry compatibility
- Dual ejector latches for easy module removal
- Latches include feature to minimize micro motion
- Palladium Nickel with Gold flash plating for improved reliability
- Added contact wipe for improved reliability

Reference Information

Product Specification: PS-71243-9999
Packaging: Tray
UL File No.: E29179
CSA File No.: LR19980A-366
Mates With: JEDEC MO-172 modules
Designed In: Inches

Electrical

Voltage: 100V
Current: 1.0A
Contact Resistance: 30mΩ max.
Dielectric Withstanding Voltage: 500V AC
Insulation Resistance: 1000 MΩ min.

Mechanical

Mating Force: 1.6N (0.35 lb) per pair
Durability: 25 cycles min.

Physical

Housing and Latch: High-temperature resistant thermoplastic, UL 94V-0
Contact: Phosphor Bronze
Plating: Selective Palladium Nickel with Gold flash with Tin/Lead on solder tails
Operating Temperature: -40 to +85°C

CATALOG DRAWING (FOR REFERENCE ONLY)

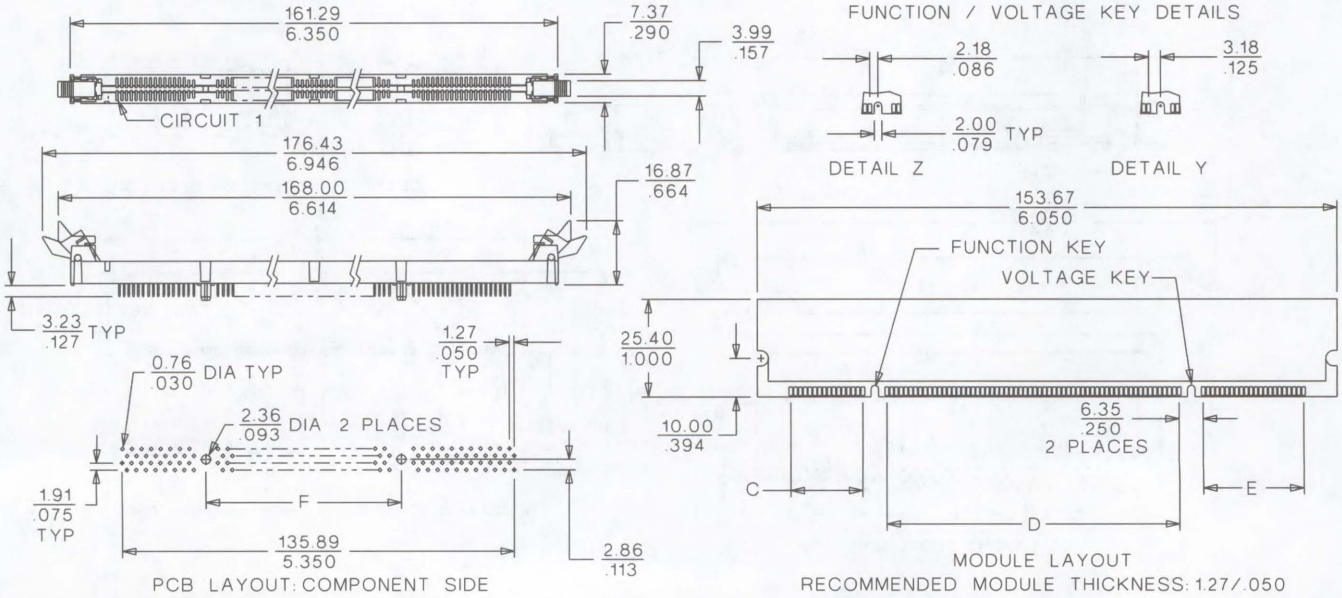

ORDERING INFORMATION

Circuits	Order No.	Description	Function Key	Voltage Key	Dimension			
					C	D	E	F
200	71251-3001	LVTTL 3.3V	Detail Y	Detail Y	19.05 (.750)	77.47 (3.050)	26.67 (1.050)	83.82 (3.300)
	71251-3002	SDRAM 3.3V	Detail Z	Detail Y	19.05 (.750)	77.47 (3.050)	26.67 (1.050)	83.82 (3.300)
	71251-3101	DDR 2.5V	Detail Y	Detail Y	41.91 (1.650)	46.99 (1.850)	34.29 (1.350)	53.34 (2.100)

1.27mm (.050") Pitch DIMM Socket

71243

Vertical, Single Key Plastic Peg

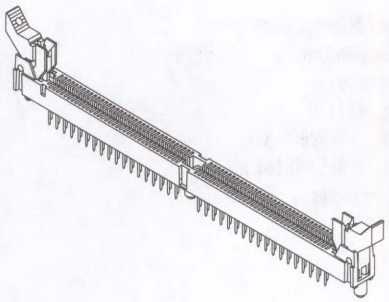

FEATURES AND SPECIFICATIONS

Features and Benefits

- Colored and keyed latch indicates pin no. 1
- Accepts JEDEC MO-167 type modules for 100% industry compatibility
- Dual ejector latches for easy module removal
- Module pre-alignment feature prevents mismating
- Palladium Nickel with Gold flash plating for improved reliability
- Added contact wipe for improved reliability

Reference Information

Product Specification: PS-71243
Packaging: Tray
UL File No.: E29179
CSA File No.: LR19980A-366
Mates With: JEDEC MO-167 modules
Designed In: Inches

Electrical

Voltage: 100V
Current: 1.0A
Contact Resistance: 30mΩ max.
Dielectric Withstanding Voltage: 500V AC
Insulation Resistance: 1000 MΩ min.

Mechanical

Mating Force: 1.6N (0.35 lb) per pair
Durability: 25 cycles min.

Physical

Housing and Latch: High-temperature resistant thermoplastic, UL 94V-0
Contact: Phosphor Bronze
Plating: Selective Palladium Nickel with Gold flash with Tin/Lead on solder tails
Operating Temperature: -40 to +85°C

CATALOG DRAWING (FOR REFERENCE ONLY)

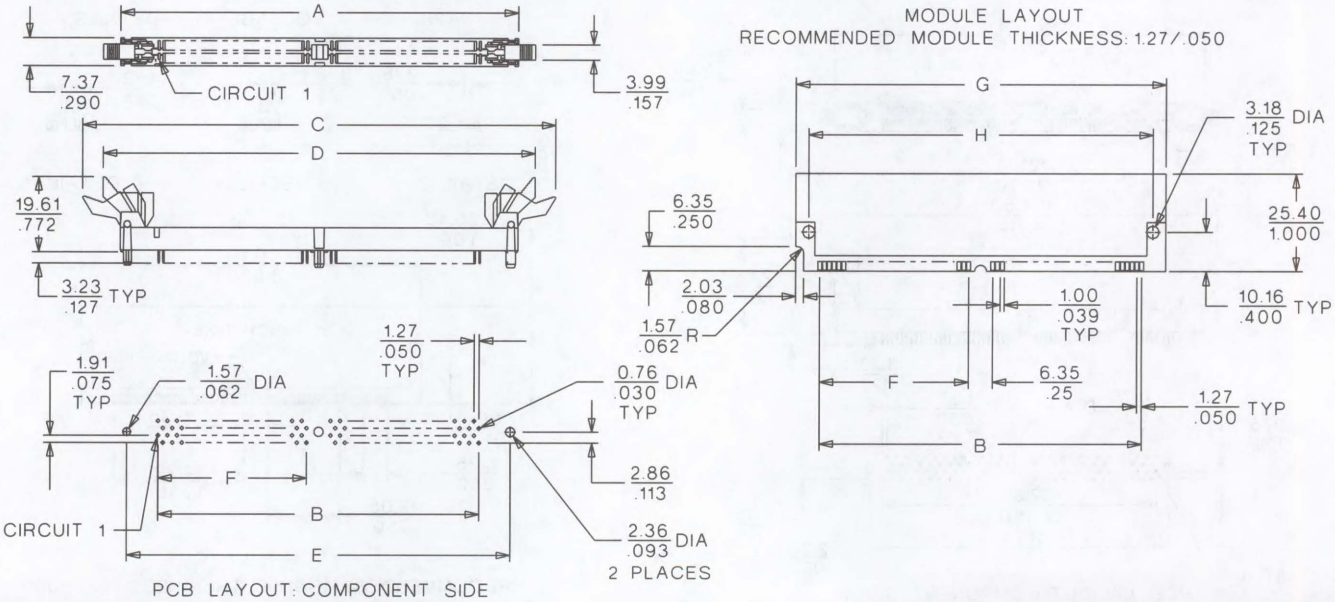

ORDERING INFORMATION AND DIMENSIONS

Circuits	Order No.	Dimension							
		A	B	C	D	E	F	G	H
144	71243-0002	115.57 (4.550)	95.25 (3.750)	135.58 (5.338)	128.72 (4.910)	111.76 (4.400)	44.45 (1.750)	107.95 (4.250)	101.19 (3.984)
160	71243-0008	125.73 (4.950)	105.41 (4.150)	145.74 (5.738)	134.88 (5.310)	121.92 (4.800)	49.53 (1.950)	118.11 (4.650)	111.35 (4.384)
200	71243-0003	151.13 (5.950)	130.81 (5.150)	171.14 (6.738)	160.28 (6.310)	147.32 (5.800)	62.63 (2.450)	143.51 (5.650)	136.75 (5.384)

1.27mm (.050") Pitch DIMM 4-Byte Socket

71251

Vertical, Multi-Key Plastic Peg Version

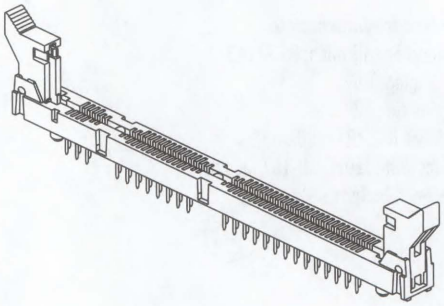

FEATURES AND SPECIFICATIONS

Features and Benefits

- Accepts JEDEC MO-161 modules for 100% industry compatibility
- Dual ejector latches for easy module removal
- Latches include feature to minimize micro motion
- Palladium Nickel with Gold flash plating for improved reliability
- Added contact wipe for improved reliability
- Optional voltage and function keying

Reference Information

Product Specification: PS-71243-9999
Packaging: Tray
UL File No.: E29179
CSA File No.: LR19980A-366
Mates With: JEDEC MO-161 modules
Designed In: Inches

Electrical

Voltage: 100V
Current: 1.0A
Contact Resistance: 30mΩ max.
Dielectric Withstanding Voltage: 500V AC
Insulation Resistance: 1000 MΩ min.

Mechanical

Mating Force: 1.6N per pair
Durability: 25 cycles min.

Physical

Housing and Latch: High-temperature resistant thermoplastic, UL 94V-0
Contact: Phosphor Bronze
Plating: Selective Palladium Nickel with Gold flash with Tin/Lead on solder tails
Operating Temperature: -40 to +85°C

CATALOG DRAWING (FOR REFERENCE ONLY)

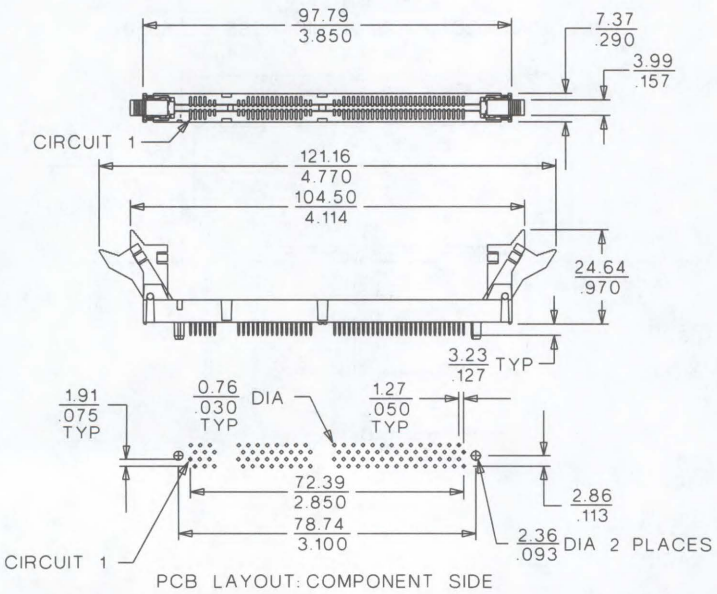

PCB LAYOUT: COMPONENT SIDE

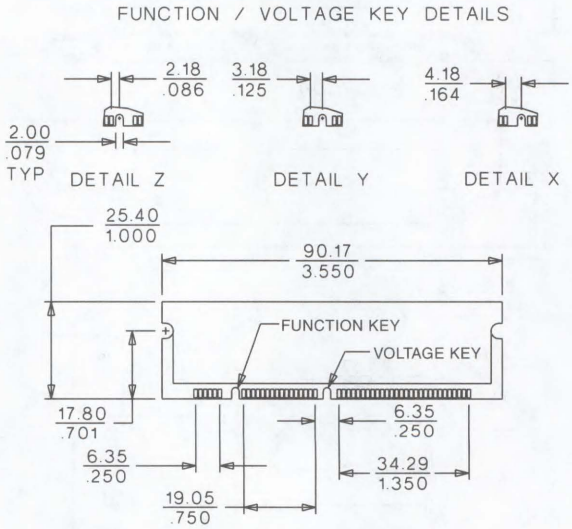

MODULE LAYOUT
RECOMMENDED MODULE THICKNESS: 1.27/.050

ORDERING INFORMATION

Circuits	Order No.	Description	Function Key	Voltage Key
100	71251-5101	Unbuffered 3.3V	Detail X	Detail Y

1.27mm (.050") Pitch DIMM 4-Byte Socket

87630

Vertical, Multi-key Plastic Peg Version

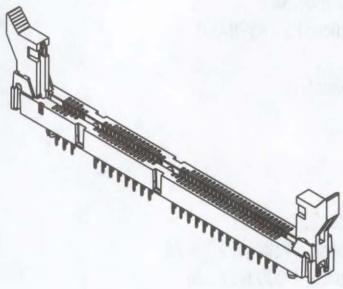

FEATURES AND SPECIFICATIONS

Features and Benefits

- Accepts JEDEC MO-161 modules for 100% industry compatibility
- Dual ejector latches for easy module removal
- Latches include feature to minimize micro motion
- Added contact wipe for improved reliability
- Optional voltage and function keying

Reference Information

Product Specification: PS-87630-004
Packaging: See Table
Mates With: JEDEC standard 1.27mm (.050") thick PCB modules
Designed In: Millimeters

Electrical

Voltage: 100V AC
Current: 1.0A
Contact Resistance: 40mΩ max.
Dielectric Withstanding Voltage: 500V AC
Insulation Resistance: 1000 MΩ min.

Mechanical

Mating Force: 83.36N (18.74 lb) max.
Contact Retention to Housing: 3.92N (.88 lb) min.
Insertion Force to PCB: 44.13N (9.92 lb)
Normal Force: 0.49N (.11 lb)
Durability: 25 cycles

Physical

Housing: High-temperature Thermoplastic, UL 94V-0
Contact: Phosphor Bronze
Plating: Contact Area—0.38μm (15μ") Gold
Solder Tails Area—1.91μm (75μ") Tin/Lead
Underplating—Nickel
Operating Temperature: -10 to +85°C

CATALOG DRAWING (FOR REFERENCE ONLY)

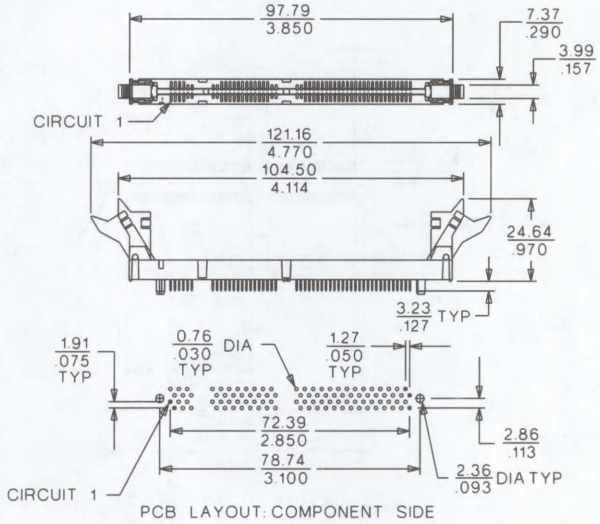

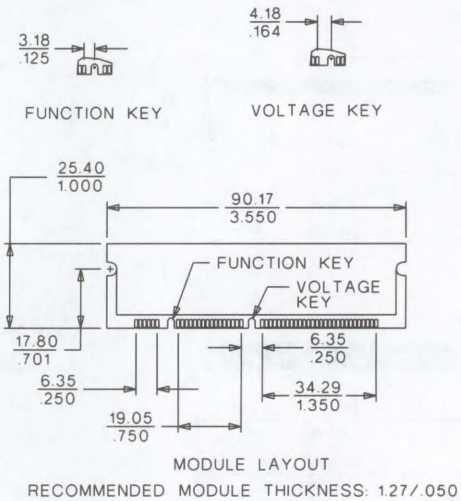

ORDERING INFORMATION AND DIMENSIONS

Circuits	Order No.	Description	Packaging Type	Function Key	Voltage Key	Tail Length
100	87630-0001	Unbuffered 3.3V	Tray	Offset Right	Center	3.23 (.127)
	87630-0011	Unbuffered 3.3V	Tube	Offset Right	Center	3.23 (.127)

0.80mm (.031") Pitch S.O. DIMM Socket

74398

22.5° Angle, SMT

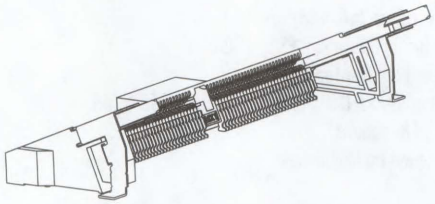

FEATURES AND SPECIFICATION

Features and Benefits

- Angled design allows for dense population of memory modules
- Front solder tabs provide secure PCB hold-down
- Polarization key assures proper module insertion
- Plastic latch prevents scratching of module, while metal anti-overstress feature protects latch from bending too far in or out

Reference Information

Product Specification: PS-74398-001
Packaging: Tray
Designed In: Millimeters

Electrical

Voltage: 100V
Current: 0.30A
Contact Resistance: 20mΩ max.
Dielectric Withstanding Voltage: 200V AC
Insulation Resistance: 1,000 MΩ min.

Mechanical

Durability: 30 cycles

Physical

Housing: White Glass-filled Thermoplastic, UL 94V-0
Contact: Phosphor Bronze
Plating: Contact Area—Gold
Solder Tail Area—Tin/lead
Underplating—Nickel
Solder Tab and Latch Cover: Brass, Tin/Lead overall
Operating Temperature: -40 to +85°C

CATALOG DRAWING (FOR REFERENCE ONLY)

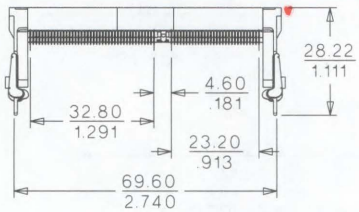

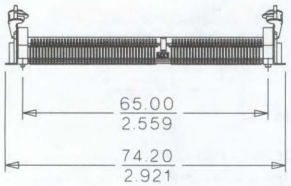

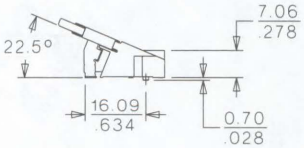

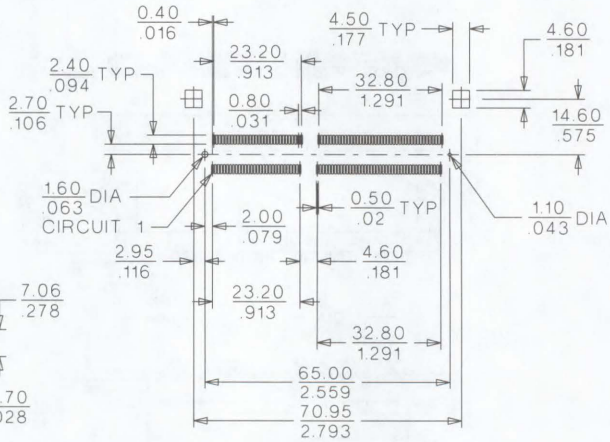

PCB LAYOUT: COMPONENT SIDE

ORDERING INFORMATION AND DIMENSIONS

Circuits	Order No.	Voltage Key
144	74398-0001	3.3V

0.80mm (.031") Pitch S.O. DIMM Socket

54142

Right Angle SMT

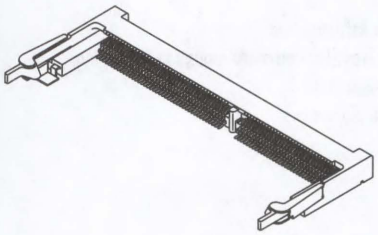

FEATURES AND SPECIFICATIONS

Features and Benefits

- Size 144 circuits
- Mounted Height: 5.2mm
- Accepts JEDEC standard DRAM and SDRAM modules
- Plastic latch prevents scratching of module, while metal anti-overstress feature protects latch from bending too far in or out
- Front solder tabs provide secure PCB hold-down
- Polarization key assures proper module insertion

Reference Information

Packaging: Tray (for automatic mounting packaging, contact Molex)
Designed In: Millimeters

Electrical

Voltage: 100V
Current: 0.3A
Contact Resistance: 60mΩ max.
Dielectric Withstanding Voltage: 200V AC/1 min.
Insulation Resistance: 1000 MΩ min.

Physical

Housing: White glass-filled LCP, UL 94V-0
Contact: Phosphor Bronze
Plating: Gold over Nickel in contact area;
Tin/Lead over Nickel in solder tail area
Solder Tab and Latch Cover—Brass, Tin/Lead
Operating Temperature: -55 to +85°C

CATALOG DRAWING (FOR REFERENCE ONLY)

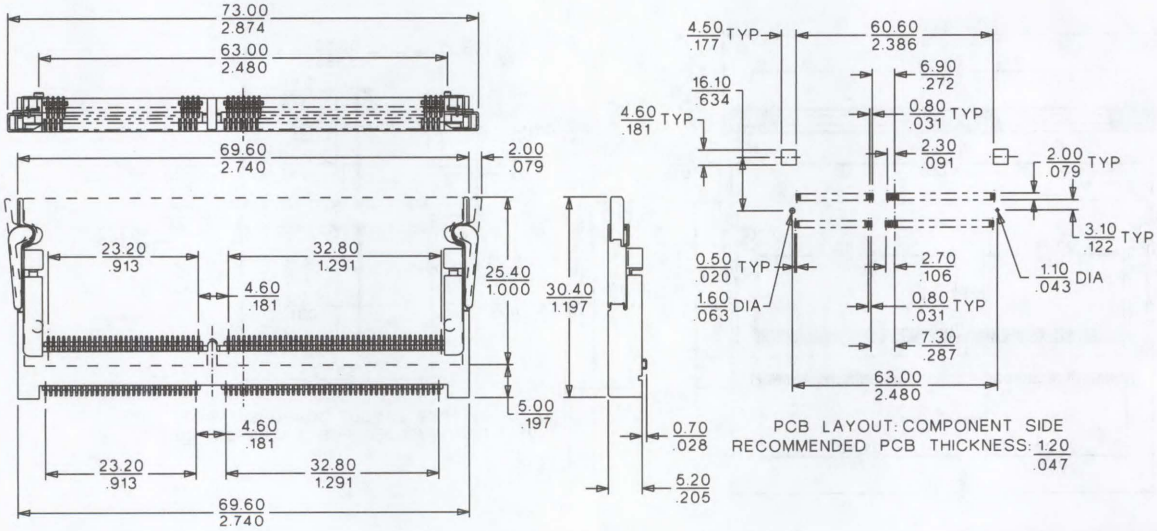

ORDERING INFORMATION

Circuits	Order No.	Power Supply
144	54142-1440	3.3V
	54142-1441	5.0V

0.80mm (.031") Pitch S.O. DIMM Socket

54144

Right Angle SMT

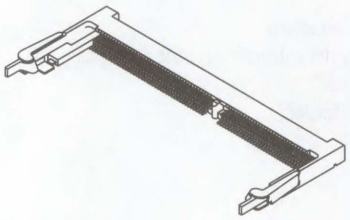

FEATURES AND SPECIFICATIONS

Features and Benefits

- Size 144 circuits
- Mounted Height: 4.0mm
- Accepts JEDEC standard DRAM and SDRAM modules
- Plastic latch prevents scratching of module, while metal anti-overstress feature protects latch from bending too far in or out
- Front solder tabs provide secure PCB hold-down
- Polarization key assures proper module insertion

Reference Information

Packaging: Tray (for automatic mounting packaging, contact Molex)
Designed In: Millimeters

Electrical

Voltage: 100V
Current: 0.3A
Contact Resistance: 50mΩ max.
Dielectric Withstanding Voltage: 200V AC/1 min.
Insulation Resistance: 1000 MΩ min.

Physical

Housing: White glass-filled LCP, UL 94V-0
Contact: Phosphor Bronze
Plating: Gold over Nickel in contact area;
Tin/Lead over Nickel in solder tail area
Solder Tab and Latch Cover—Brass, Tin/Lead
Operating Temperature: -55 to +85°C

CATALOG DRAWING (FOR REFERENCE ONLY)

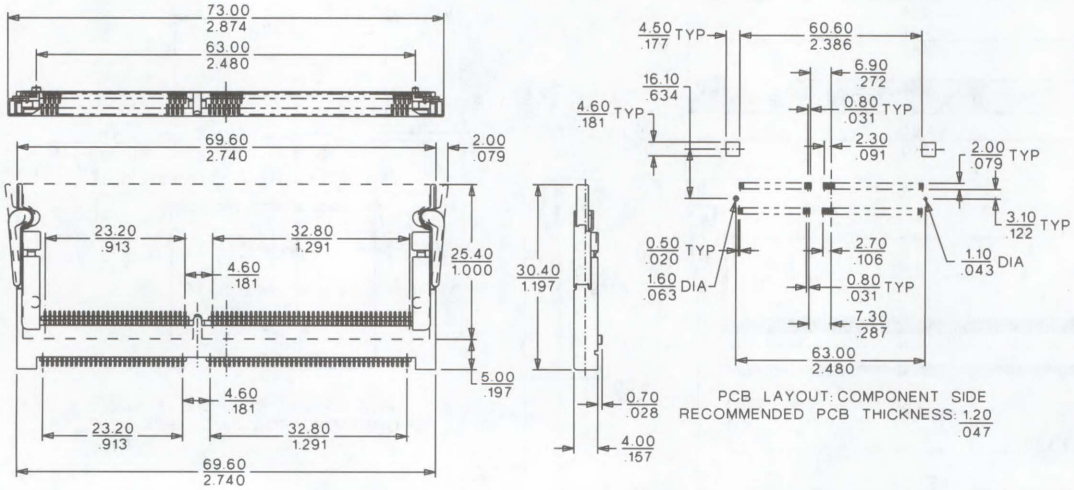

ORDERING INFORMATION

Circuits	Order No.	Power Supply
144	54144-1440	3.3V
	54144-1441	5.0V

0.80mm (.031") Pitch S.O. DIMM Socket

54432

Right Angle, SMT Reverse Keying

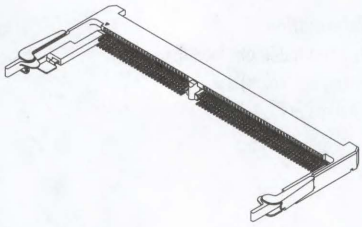

FEATURES AND SPECIFICATIONS

Features and Benefits

- Size 144 circuits
- Mounted Height: 4.0mm
- Reverse keying enables back-to-back placement of sockets for space savings
- Accepts JEDEC standard DRAM and SDRAM modules
- Plastic latch prevents scratching of module, while metal anti-overstress feature protects latch from bending too far in or out
- Front solder tabs provide secure PCB hold-down

Reference Information

Packaging: Tray (for automatic mounting packaging, contact Molex)
Designed In: Millimeters

Electrical

Voltage: 100V
Current: 0.3A
Contact Resistance: 60mΩ max.
Dielectric Withstanding Voltage: 200V AC/1 min.
Insulation Resistance: 1000 MΩ min.

Physical

Housing: White glass-filled LCP, UL 94V-0
Contact: Phosphor Bronze
Plating: Gold over Nickel in contact area;
Tin/Lead over Nickel in solder tail area
Solder Tab and Latch Cover—Brass, Tin/Lead
Operating Temperature: -55 to +85°C

CATALOG DRAWING (FOR REFERENCE ONLY)

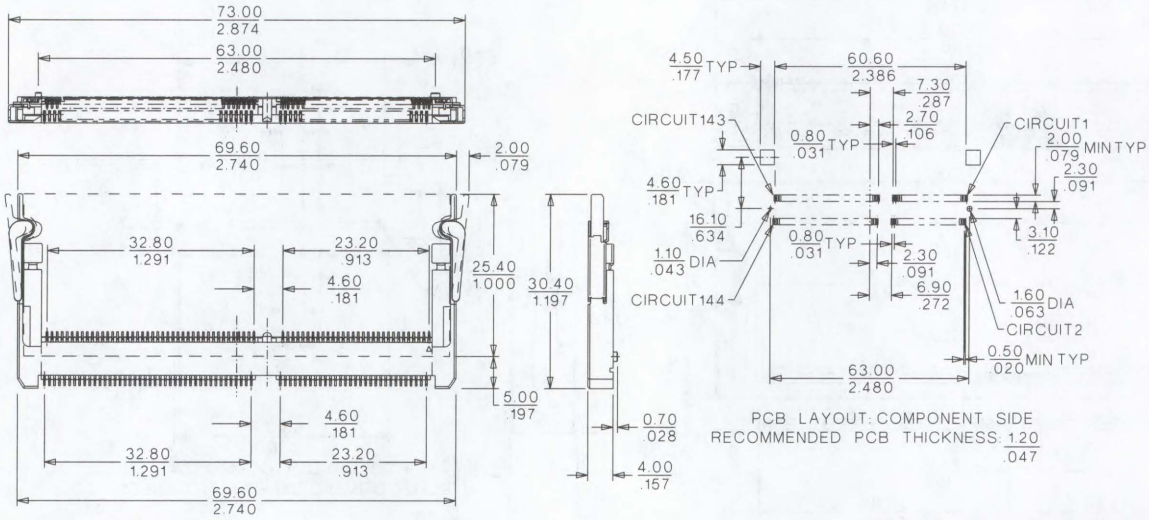

ORDERING INFORMATION

Circuits	Order No.	Power Supply
144	54432-1440	3.3V
	54432-1441	5.0V

0.80mm (.031") Pitch SGRAM Socket

54189

Right Angle, SMT

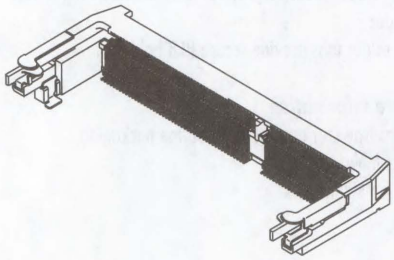

FEATURES AND SPECIFICATIONS

Features and Benefits

- Sizes 144 circuits
- Mounted Height: 10.0mm
- Accepts JEDEC standard SGRAM modules
- Plastic latch prevents scratching of module, while metal anti-overstress feature protects latch from bending too far out
- Front solder tabs provide secure PCB hold-down
- Polarization key assures proper module insertion

Reference Information

Packaging: Tray (for automatic mounting packaging, contact Molex)
Designed In: Millimeters

Electrical

Voltage: 100V
Current: 0.3A
Contact Resistance: 70mΩ max.
Dielectric Withstanding Voltage: 200V AC/1 min.
Insulation Resistance: 1000 MΩ min.

Physical

Housing: White glass-filled LCP, UL 94V-0
Contact: Phosphor Bronze
Plating: Gold over Nickel in contact area;
Tin/Lead over Nickel in solder tail area
Solder Tab—Brass, Tin/Lead
Latch Cover—Stainless Steel
Operating Temperature: -55 to +85°C

CATALOG DRAWING (FOR REFERENCE ONLY)

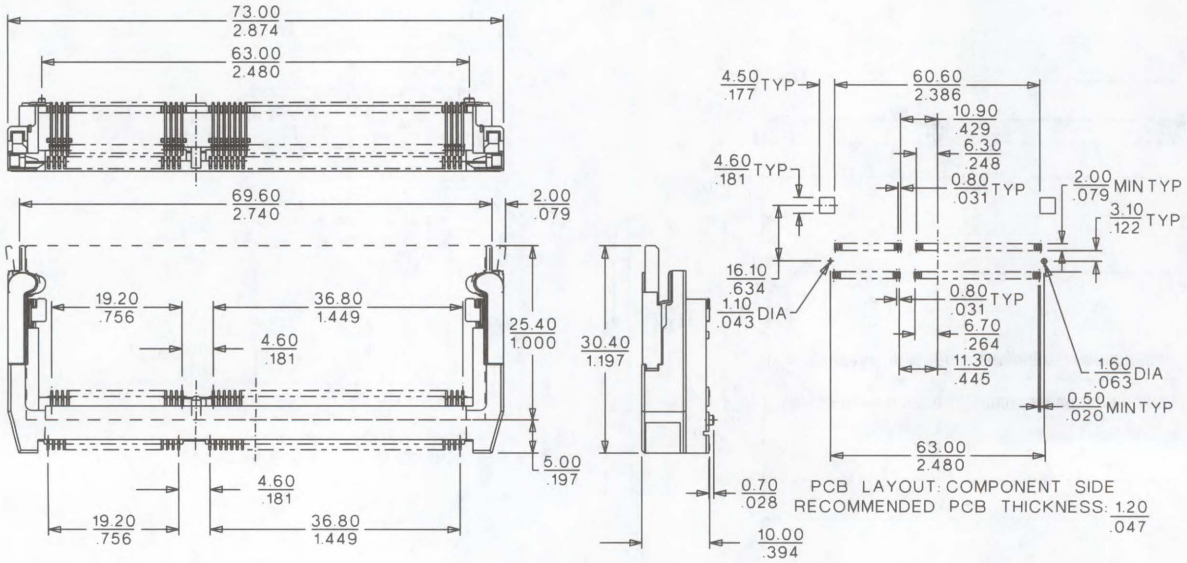

ORDERING INFORMATION

Circuits	Order No.	Power Supply
144	54189-1440	3.3V
	54189-1441	5.0V

1.27mm (.050") Pitch SIMM Module Dimensions

MO-116

CATALOG DRAWING (FOR REFERENCE ONLY)

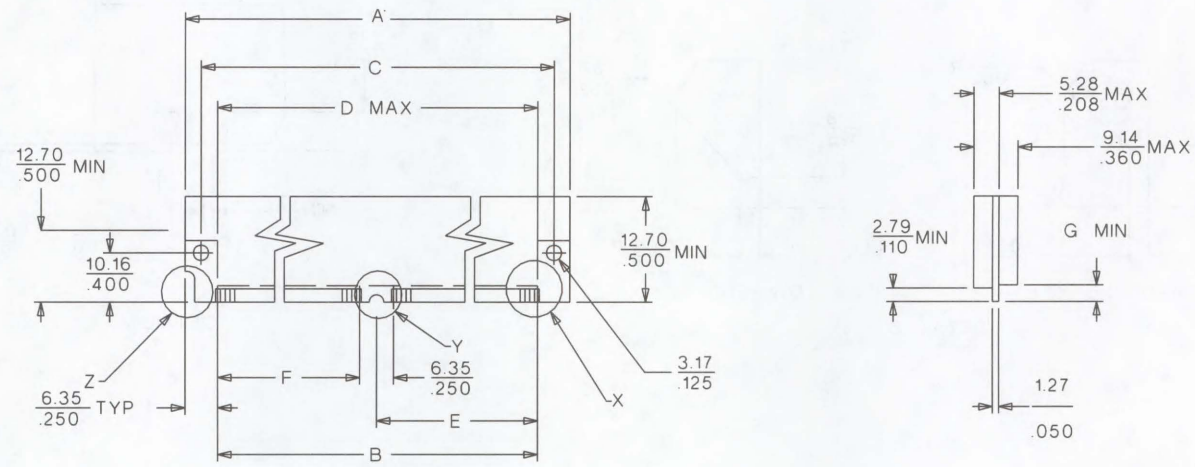

DIMENSIONS

Circuits	Dimension									
	A	B	C	D	E	F	Vertical G	40° G	22.5° G	Right Angle G
40	67.31 (2.650)	54.61 (2.150)	60.55 (2.384)	53.85 (2.120)	27.31 (1.075)	24.13 (.950)	2.79 (.110)	3.81 (.150)	5.72 (.225)	2.79 (.110)
56	87.63 (3.450)	74.93 (2.950)	80.87 (3.184)	74.17 (2.920)	37.47 (1.475)	34.29 (1.350)	2.79 (.110)	3.81 (.150)	5.72 (.225)	2.79 (.110)
64	97.79 (3.850)	85.09 (3.350)	91.03 (3.584)	84.33 (3.320)	42.55 (1.675)	39.37 (1.550)	2.79 (.110)	3.81 (.150)	5.72 (.225)	2.79 (.110)
68	102.87 (4.050)	90.17 (3.550)	96.11 (3.784)	89.41 (3.520)	45.09 (1.775)	41.91 (1.650)	2.79 (.110)	3.81 (.150)	5.72 (.225)	2.79 (.110)
72	107.95 (4.250)	95.25 (3.750)	101.19 (3.984)	94.49 (3.720)	47.63 (1.875)	44.45 (1.750)	2.79 (.110)	3.81 (.150)	5.72 (.225)	2.79 (.110)
80	118.11 (4.650)	105.41 (4.150)	111.35 (4.384)	104.65 (4.120)	52.71 (2.075)	49.53 (1.950)	2.79 (.110)	3.81 (.150)	5.72 (.225)	2.79 (.110)
84	123.19 (4.850)	110.49 (4.350)	116.43 (4.584)	109.73 (4.320)	55.25 (2.175)	52.07 (2.050)	2.79 (.110)	3.81 (.150)	5.72 (.225)	2.79 (.110)
100	143.51 (5.650)	130.81 (5.150)	136.75 (5.384)	130.05 (5.120)	65.41 (2.575)	62.23 (2.450)	2.79 (.110)	3.81 (.150)	5.72 (.225)	2.79 (.110)

1.27mm (.050") Pitch SIMM Module Dimensions

MO-116

DETAIL Z CATALOG DRAWING (FOR REFERENCE ONLY)

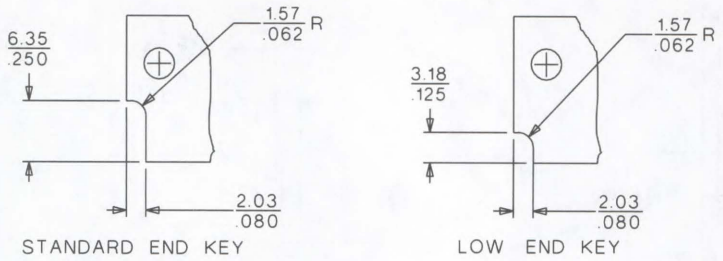

DETAIL Z

DETAIL X

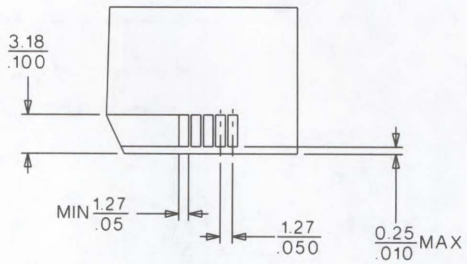

DETAIL X

DETAIL Y

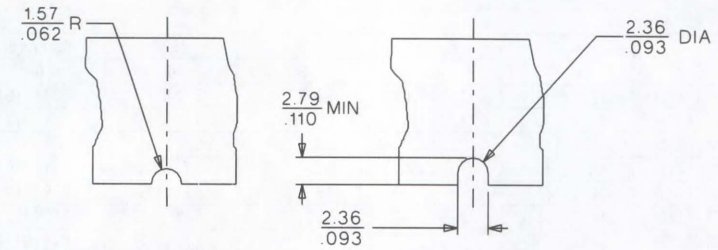

DETAIL Y

NOTES

1. Copper contact pads are to be overplated with .000050" min. Nickel followed with .000200" min. Tin/Lead reflow or .000075" min. Nickel followed with .000030" min. Gold
2. Contact pads are required on both component and circuit sides of the module, paired contacts should be electrically shunted
3. Maximum allowable warpage = .010" bow

Single-sided leadless SIMM module configuration requirements (in addition to notes 1 to 3):

4. For SIMM modules thicker than .150" and/or taller than .500", contact Molex for 22.5° socket spacing
5. For SIMM modules thicker than .150" and/or taller than 2.00", contact Molex for 40° socket spacing

Double-sided leadless SIMM module configuration requirements (in addition to notes 1 to 3):

6. For SIMM modules thicker than .290" and/or taller than .500", contact Molex for 40 and 22.5° socket spacing

1.27mm (.050") Pitch SIMM Socket

78962

Left Polarization, Vertical Single Row, Metal Latch

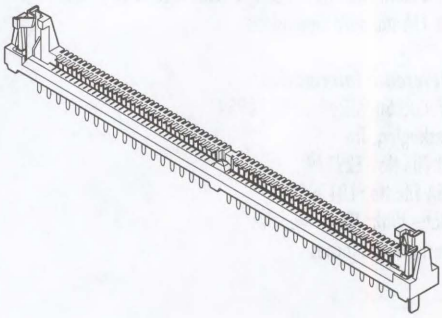

FEATURES AND SPECIFICATIONS

Features and Benefits

- Zero insertion force contacts improve socket and module contact life and provide for fast on-line assembly
- Guaranteed 2 points of contact per readout with standard JEDEC module
- Anti-overstress latch feature provides extra protection during module removal
- Polarization posts provide orientation for proper loading of socket into printed circuit board
- Polarization rib properly orients module to socket
- EIA standard dimensions

Reference Information

Product Specification: PS-78954
Packaging: Tray
UL File No.: E29179
CSA File No.: LR19980
Mates With: JEDEC modules
Designed In: Inches

Electrical

Voltage: 250V
Current: 1.0A
Contact Resistance: 30mΩ max.
Dielectric Withstanding Voltage: 1000V AC
Insulation Resistance: 5000 MΩ min.

Mechanical

Normal Force: 1.47N average
Durability: 25 cycles

Physical

Housing: Black LCP, UL 94V-0
Latch: Stainless Steel
Contact: Phosphor Bronze Alloy
Plating: See Table
Operating Temperature: -40 to +85°C

CATALOG DRAWING (FOR REFERENCE ONLY)

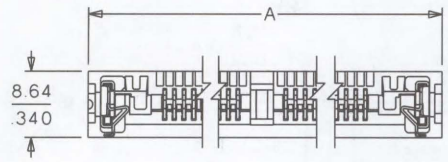

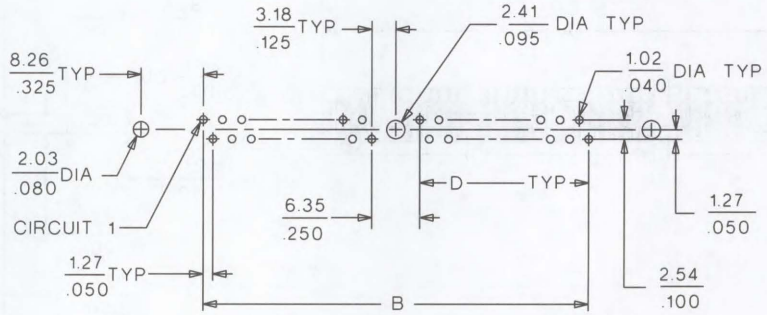

PCB LAYOUT: COMPONENT SIDE

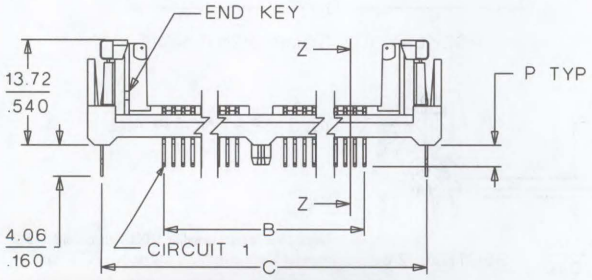

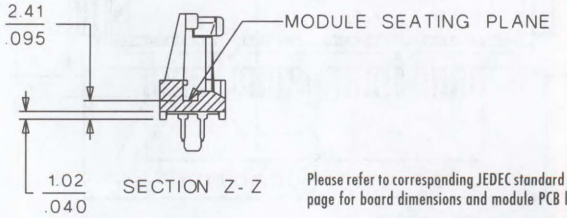

Please refer to corresponding JEDEC standard MO-116 page for board dimensions and module PCB layout

ORDERING INFORMATION AND DIMENSIONS

Circuits	Order No. Tin Plate		Order No. Gold Plate		Dimension				
	With Center Post	Without Center Post	With Center Post	Without Center Post	A	B	C	D	P
40		15-82-0798			74.90 (2.950)	54.60 (2.150)	71.10 (2.800)	24.13 (.950)	2.79 (.110)
64	15-82-1104		15-82-0739		105.40 (4.150)	85.10 (3.350)	101.60 (4.000)	39.37 (1.550)	2.79 (.110)
68	15-82-1105		15-82-1190		110.50 (4.350)	90.20 (3.550)	106.70 (4.200)	41.91 (1.650)	2.79 (.110)
72	15-82-0775		15-82-0762		115.60 (4.550)	95.30 (3.750)	111.80 (4.400)	44.45 (1.750)	2.79 (.110)
80	15-82-1117				125.70 (4.950)	105.40 (4.150)	121.90 (4.800)	49.53 (1.950)	2.79 (.110)
100			15-82-1194		151.10 (5.950)	130.80 (5.150)	147.30 (5.800)	62.23 (2.450)	2.79 (.110)

Plating: Post plate 200μ" min. Tin/Lead over 50μ" min. Nickel overall or post plate 30μ" min. Gold on contact area and 150μ" min. Tin/Lead on solder tails, all over Nickel

Call Molex for information on nonlisted order numbers

FEATURES AND SPECIFICATIONS

1.27mm (.050") Pitch SIMM Socket

78962

Right Polarization, Vertical Single Row, Metal Latch

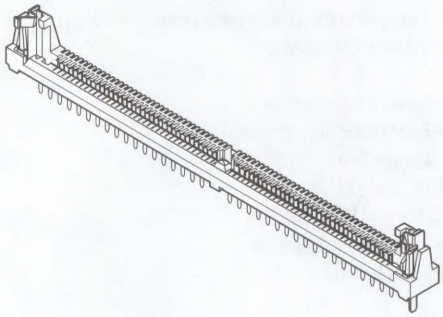

Features and Benefits

- Zero insertion force contacts improve socket and module contact life and provide for fast on-line assembly
- Guaranteed 2 points of contact per readout with standard JEDEC module
- Anti-overstress latch feature provides extra protection during module removal
- Polarization posts provide orientation for proper loading of socket into printed circuit board
- Polarization rib properly orients module to socket
- EIA standard dimensions

Reference Information

Product Specification: PS-78954
Packaging: Tray
UL File No.: E29179
CSA File No.: LR19980
Mates With: JEDEC modules
Designed In: Inches

Electrical

Voltage: 250V
Current: 1.0A
Contact Resistance: 30mΩ max.
Dielectric Withstanding Voltage: 1000V AC
Insulation Resistance: 5000 MΩ min.

Mechanical

Normal Force: 1.47N average
Durability: 25 cycles

Physical

Housing: Black LCP, UL 94V-0
Latch: Stainless Steel
Contact: Phosphor Bronze Alloy
Plating: See Table
Operating Temperature: -40 to +85˚C

CATALOG DRAWING (FOR REFERENCE ONLY)

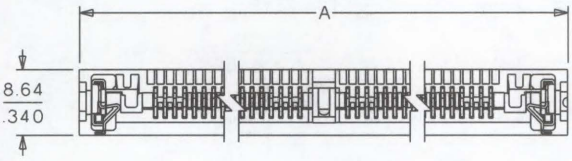

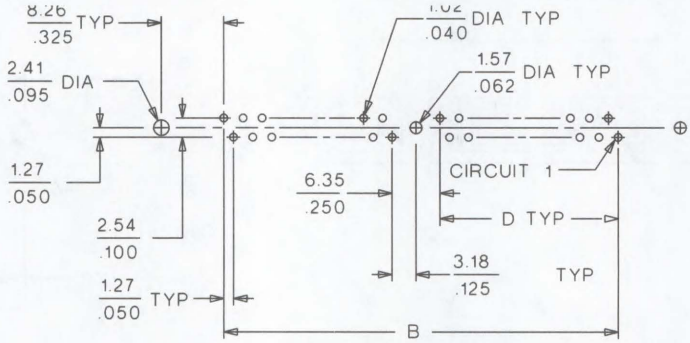

PCB LAYOUT: COMPONENT SIDE

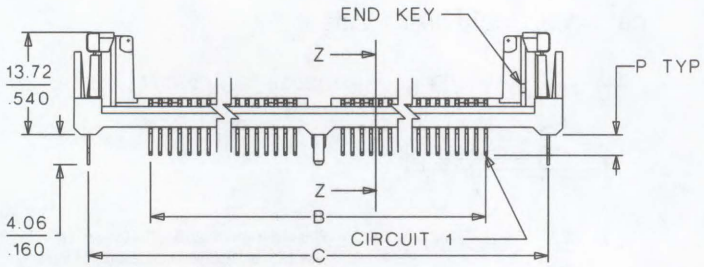

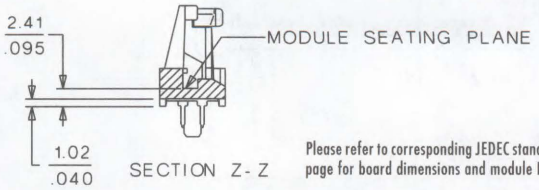

SECTION Z-Z

Please refer to corresponding JEDEC standard MO-116 page for board dimensions and module PCB layout

ORDERING INFORMATION AND DIMENSIONS

Circuits	Order No. Tin Plate		Order No. Gold Plate		Dimension				
	With Center Post	Without Center Post	With Center Post	Without Center Post	A	B	C	D	P
40	15-82-1181	15-82-0782	15-82-1175	15-82-0793	74.90 (2.950)	54.60 (2.150)	71.10 (2.800)	24.13 (.950)	2.79 (.110)
64	15-82-1176	15-82-1146	15-82-0791		105.40 (4.150)	85.10 (3.350)	101.60 (4.000)	39.37 (1.550)	2.79 (.110)
68	15-82-1178	15-82-1177	15-82-1180		110.50 (4.350)	90.20 (3.550)	106.70 (4.200)	41.91 (1.650)	2.79 (.110)
72	15-82-0777	15-82-0772	15-82-0788		115.60 (4.550)	95.30 (3.750)	111.80 (4.400)	44.45 (1.750)	2.79 (.110)
80	15-82-1183				125.70 (4.950)	105.40 (4.150)	121.90 (4.800)	49.53 (1.950)	2.79 (.110)
80	15-82-0770				125.70 (4.950)	105.40 (4.150)	121.90 (4.800)	49.53 (1.950)	3.18 (.125)
100			15-82-1100		151.10 (5.950)	130.80 (5.150)	147.30 (5.800)	62.23 (2.450)	2.79 (.110)

Plating: Post plate 200µ" min. Tin/Lead over 50µ" min. Nickel overall or post plate 30µ" min. Gold on contact area and 150µ" min. Tin/Lead on solder tails, all over Nickel

Call Molex for information on nonlisted order numbers

1.27mm (.050") Pitch SIMM Socket

78964

Left Polarization Low Profile (22.5°) Single Row, Metal Latch

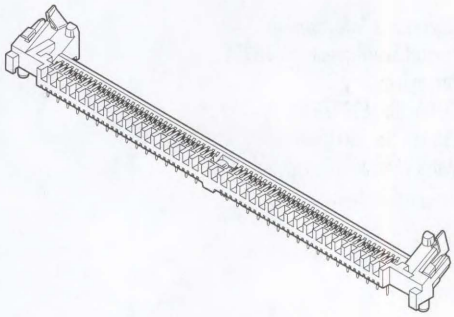

FEATURES AND SPECIFICATIONS

Features and Benefits

- Zero insertion force contacts improve socket and module contact life and provide for fast on-line assembly
- Guaranteed 2 points of contact per readout with standard JEDEC module
- Anti-overstress latch feature provides extra protection during module removal
- Polarization posts provide orientation for proper loading of socket into printed circuit board
- Polarization rib properly orients module to socket
- EIA standard dimensions

Reference Information

Product Specification: PS-78954
Packaging: Tray
UL File No.: E29179
CSA File No.: LR19980
Mates With: JEDEC modules
Designed In: Inches

Electrical

Voltage: 250V
Current: 1.0A
Contact Resistance: 30mΩ max.
Dielectric Withstanding Voltage: 1000V AC
Insulation Resistance: 5000 MΩ min.

Mechanical

Normal Force: 11.47N average
Durability: 25 cycles

Physical

Housing: Black LCP, UL 94V-0
Latch: Stainless Steel
Contact: Phosphor Bronze Alloy
Plating: See Table
Operating Temperature: -40 to +85°C

CATALOG DRAWING (FOR REFERENCE ONLY)

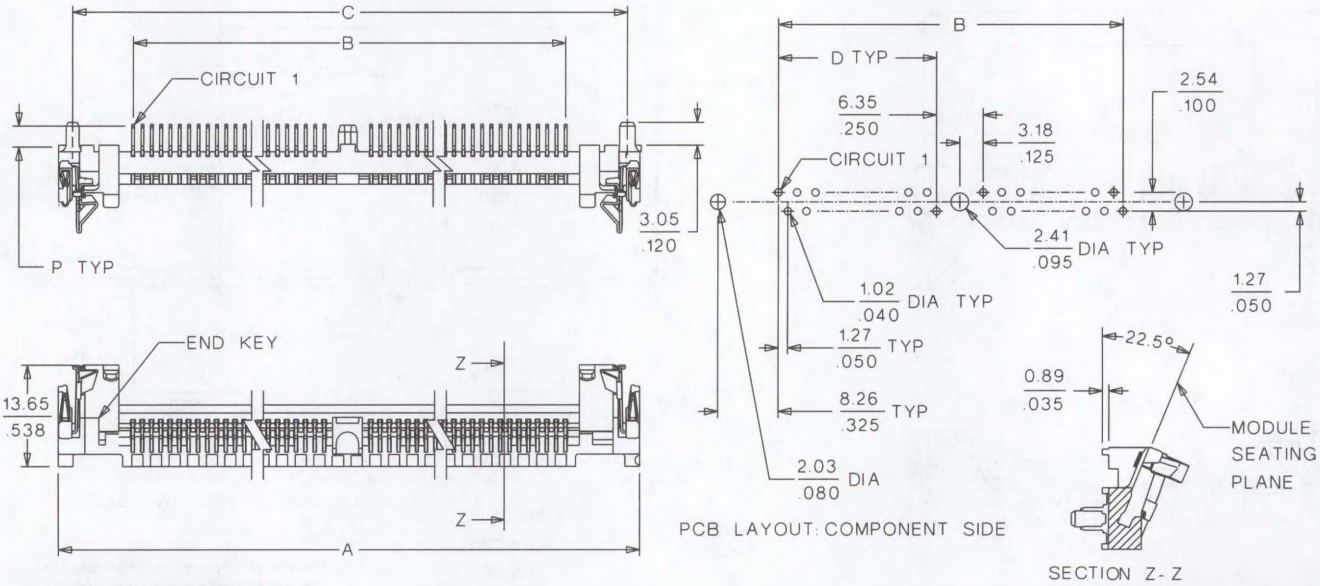

ORDERING INFORMATION AND DIMENSIONS

Circuits	Order No. Tin Plate		Order No. Gold Plate		Dimension				
	With Center Post	Without Center Post	With Center Post	Without Center Post	A	B	C	D	P
40		15-82-0653		15-82-0654	74.93 (2.950)	54.61 (2.150)	71.12 (2.800)	24.13 (.950)	2.79 (.110)
56			15-82-0658		95.30 (3.750)	74.90 (2.950)	91.40 (3.600)	34.29 (1.350)	2.79 (.110)
64	15-82-0667				105.40 (4.150)	85.10 (3.350)	101.60 (4.000)	39.37 (1.550)	2.79 (.110)
68	15-82-0693	15-82-0689			110.50 (4.350)	90.20 (3.550)	106.70 (4.200)	41.91 (1.650)	2.79 (.110)
72	15-82-0678		15-82-0675		115.60 (4.550)	95.30 (3.750)	111.80 (4.400)	44.45 (1.750)	2.79 (.110)
80	15-82-0685		15-82-0683		125.70 (4.950)	105.40 (4.150)	121.90 (4.800)	49.53 (1.950)	2.79 (.110)

Plating: Post plate 200μ" min. Tin/Lead over 50μ" min. Nickel overall or post plate 30μ" min. Gold on contact area and 150μ" min. Tin/Lead on solder tails, all over Nickel

Call Molex for information on nonlisted order numbers

1.27mm (.050") Pitch SIMM Socket

78976

Left Polarization Low Profile (40°) Single Row, Metal Latch

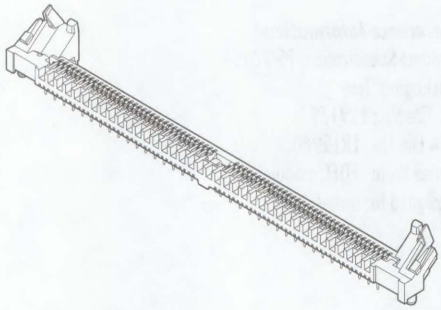

FEATURES AND SPECIFICATIONS

Features and Benefits

- Zero insertion force contacts improve socket and module contact life and provide for fast on-line assembly
- Guaranteed 2 points of contact per readout with standard JEDEC module
- Anti-overstress latch feature provides extra protection during module removal
- Polarization posts provide orientation for proper loading of socket into printed circuit board
- Polarization rib properly orients module to socket
- EIA standard dimensions

Reference Information

Product Specification: PS-78954
Packaging: Tray
UL File No.: E29179
CSA File No.: LR19980
Mates With: JEDEC modules
Designed In: Inches

Electrical

Voltage: 250V
Current: 1.0A
Contact Resistance: 30mΩ max.
Dielectric Withstanding Voltage: 1000V AC
Insulation Resistance: 5000 MΩ min.

Mechanical

Normal Force: 1.47N average
Durability: 25 cycles

Physical

Housing: LCP, UL 94V-0
Latch: Stainless Steel
Contact: Phosphor Bronze Alloy
Plating: See Table
Operating Temperature: -40 to +85°C

CATALOG DRAWING (FOR REFERENCE ONLY)

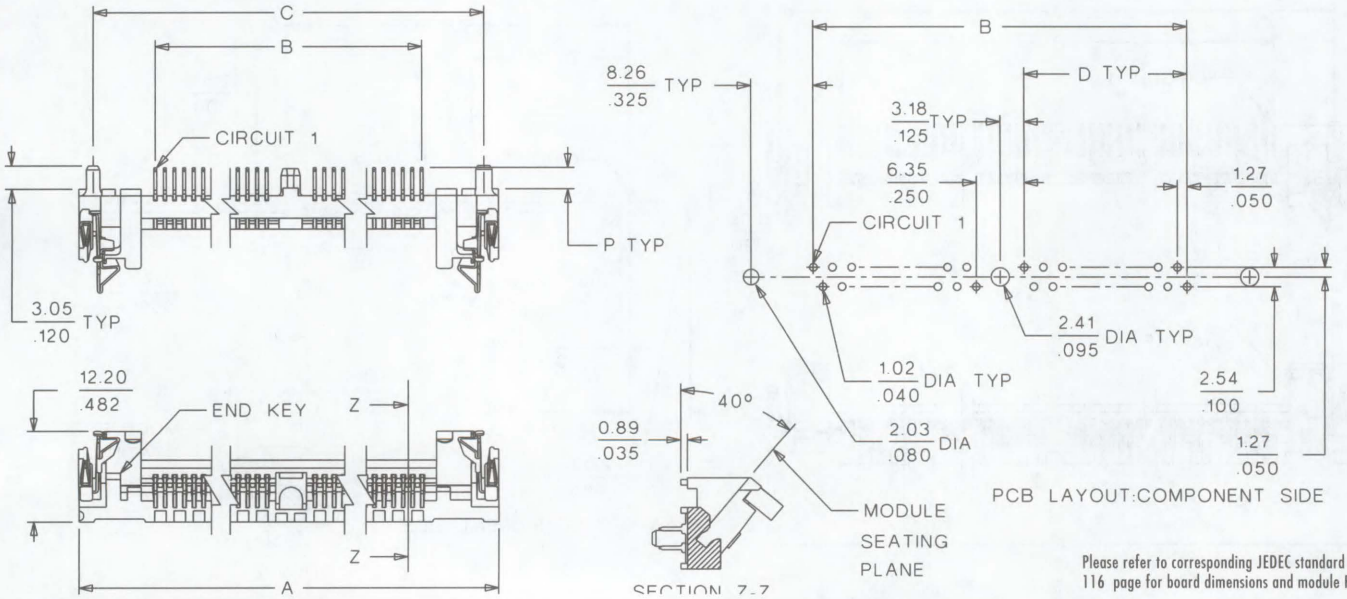

Please refer to corresponding JEDEC standard MO-116 page for board dimensions and module PCB lay-

ORDERING INFORMATION AND DIMENSIONS

Circuits	Order No. With Center Post		Polarizing Key	Dimension					Housing Color
	Tin Plate	Gold Plate		A	B	C	D	P	
72	15-82-0619	15-82-0628	Low 3.18 (.125)	115.60 (4.550)	95.30 (3.750)	111.80 (4.400)	44.45 (1.750)	2.29 (.090)	Gray
72	15-82-0649	15-82-0627	High 6.35 (.250)	115.60 (4.550)	95.30 (3.750)	111.80 (4.400)	44.45 (1.750)	2.29 (.090)	Black
72	15-82-0603		Low 3.18 (.125)	115.60 (4.550)	95.30 (3.750)	111.80 (4.400)	44.45 (1.750)	2.79 (.110)	Gray
72	15-82-0607	15-82-0613	High 6.35 (.250)	115.60 (4.550)	95.30 (3.750)	111.80 (4.400)	44.45 (1.750)	2.79 (.110)	Black
72		15-82-0621	Low 3.18 (.125)	115.60 (4.550)	95.30 (3.750)	111.80 (4.400)	44.45 (1.750)	3.56 (.140)	Gray
80	15-82-0622	15-82-0623	Low 3.18 (.125)	125.70 (4.950)	105.40 (4.150)	121.90 (4.800)	49.53 (1.950)	2.79 (.110)	Gray

Plating: Post plate 200μ" min. Tin/Lead over 50μ" min. Nickel overall or post plate 30μ" min. Gold on contact area and 150μ" min. Tin/Lead on solder tails, all over Nickel

Call Molex for information on nonlisted order numbers

1.27mm (.050") Pitch SIMM Socket

78968

Left Polarization, Right Angle Single Row, Metal Latch

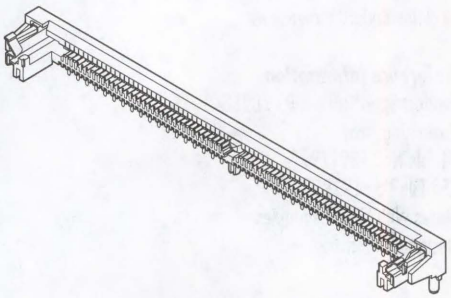

FEATURES AND SPECIFICATIONS

Features and Benefits

- Zero insertion force contacts improve socket and module contact life and provide for fast on-line assembly
- Guaranteed 2 points of contact per readout with standard JEDEC module
- Anti-overstress latch feature provides extra protection during module removal
- Polarization posts provide orientation for proper loading of socket into printed circuit board
- Polarization rib properly orients module to socket
- EIA standard dimensions

Reference Information

Product Specification: PS-78968
Packaging: Tray
UL File No.: E29179
CSA File No.: LR19980
Mates With: JEDEC modules
Designed In: Inches

Electrical

Voltage: 250V
Current: 1.0A
Contact Resistance: 30mΩ max.
Dielectric Withstanding Voltage: 1000V AC
Insulation Resistance: 5000 MΩ min.

Mechanical

Normal Force: 1.47N average
Durability: 25 cycles

Physical

Housing: Black LCP, UL 94V-0
Latch: Stainless Steel
Contact: Phosphor Bronze Alloy
Plating: See Table
Operating Temperature: -40 to +85°C

CATALOG DRAWING (FOR REFERENCE ONLY)

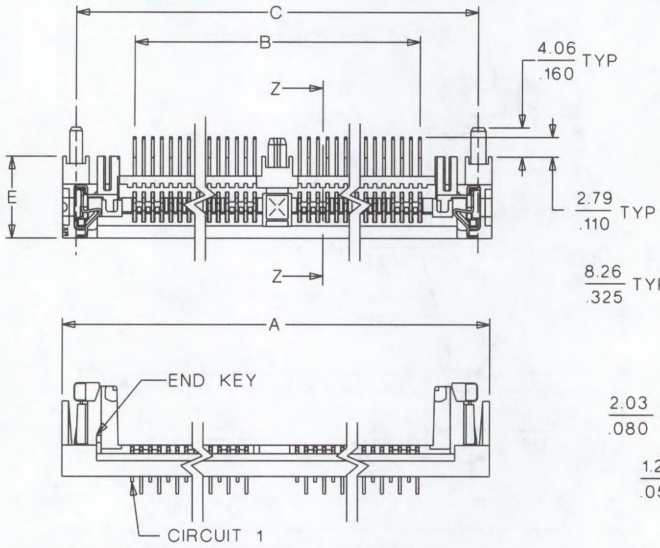

Polarization key location as viewed from module insertion side of SIMM socket
Circuit 1, polarization key and small post are located at the same end, whether right or left

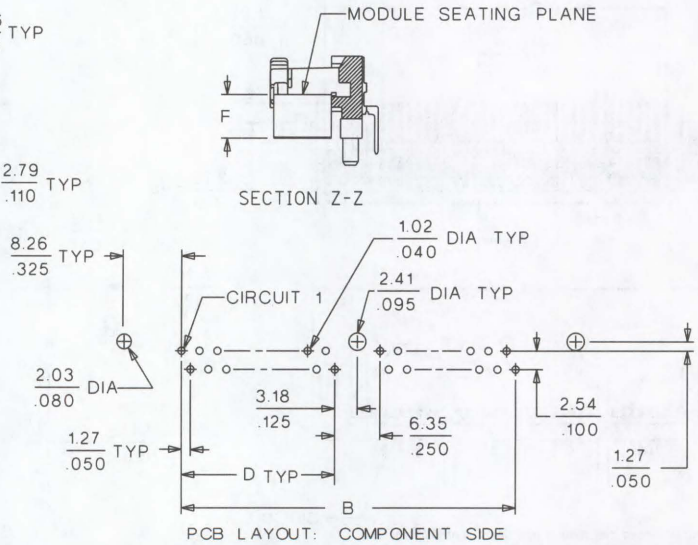

Please refer to corresponding JEDEC standard MO-116 page for board dimensions and module PCB layout

ORDERING INFORMATION AND DIMENSIONS

Circuits	Order No.							Dimension			
	.160	.190		.250		.290		A	B	C	D
	F = 4.06mm (.160")	F = 4.83mm (.190")		F = 6.35mm (.250")		F = 7.37mm (.290")					
	E = 9.09mm (.358")	E = 9.86mm (.388")		E = 11.38mm (.448")		E = 12.40mm (.488")					
	Gold	Tin	Gold	Tin	Gold	Tin	Gold				
64				15-82-1543	15-82-1550			105.41 (4.150)	85.09 (3.350)	101.60 (4.000)	39.37 (1.550)
72	15-82-1393	15-82-1466	15-82-1473	15-82-1538	15-82-0312	15-82-1620	15-82-1627	115.57 (4.550)	95.25 (3.750)	111.76 (4.400)	44.45 (1.750)
80				15-82-1546				125.73 (4.950)	105.41 (4.150)	121.92 (4.800)	49.53 (1.950)
100					15-82-0311			151.13 (5.950)	130.81 (5.150)	147.32 (5.800)	62.23 (2.450)

Plating: Post plate 200μ" min. Tin/Lead over 50μ" min. Nickel overall or post plate 30μ" min. Gold on contact area and 150μ" min. Tin/Lead on solder tails, all over 75μ" min. Nickel

FEATURES AND SPECIFICATIONS

1.27mm (.050") Pitch SIMM Socket

78968

Right Polarization Right Angle, Single Row Metal Latch

Features and Benefits

- Zero insertion force contacts improve socket and module contact life and provide for fast on-line assembly
- Guaranteed 2 points of contact per readout with standard JEDEC module
- Anti-overstress latch feature provides extra protection during module removal
- Polarization posts provide orientation for proper loading of socket into printed circuit board
- Polarization rib properly orients module to socket
- EIA standard dimensions

Reference Information

Product Specification: PS-78968
Packaging: Tray
UL File No.: E29179
CSA File No.: LR19980
Mates With: JEDEC modules
Designed In: Inches

Electrical

Voltage: 250V
Current: 1.0A
Contact Resistance: 30mΩ max.
Dielectric Withstanding Voltage: 1000V AC
Insulation Resistance: 5000 MΩ min.

Mechanical

Normal Force: 1.47N average
Durability: 25 cycles

Physical

Housing: Black LCP, UL 94V-0
Latch: Stainless Steel
Contact: Phosphor Bronze Alloy
Plating: See Table
Operating Temperature: -40 to +85°C

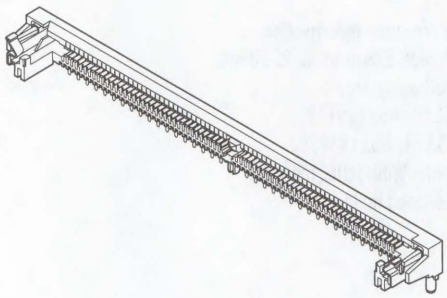

CATALOG DRAWING (FOR REFERENCE ONLY)

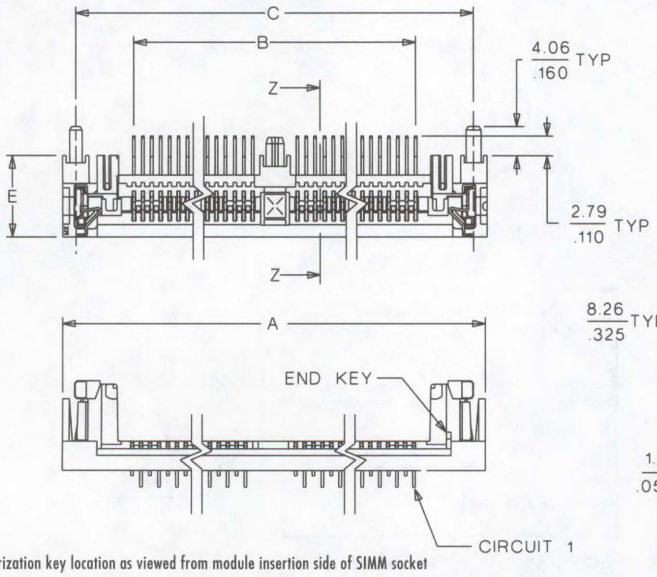

Polarization key location as viewed from module insertion side of SIMM socket
Circuit 1, polarization key and small post are located at the same end, whether right or left

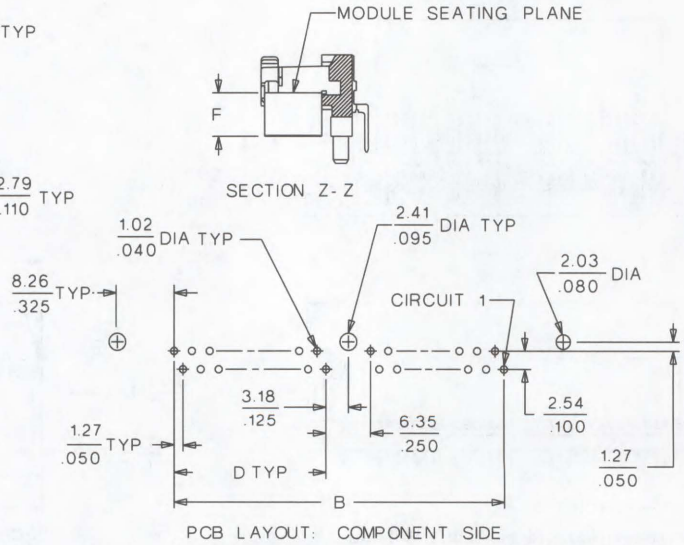

PCB LAYOUT: COMPONENT SIDE
Please refer to corresponding JEDEC standard MO-116 page for board dimensions and module PCB layout

ORDERING INFORMATION AND DIMENSIONS

Circuits	Order No.				Dimension			
	.160	.250	.290		A	B	C	D
	F = 4.06mm (.160")	F = 6.35mm (.250")	F = 7.37mm (.290")					
	E = 9.09mm (.358")	E = 11.38mm (.448")	E = 12.40mm (.488")					
	Gold	Tin	Tin	Gold				
64		15-82-1556			105.41 (4.150)	85.09 (3.350)	101.60 (4.000)	39.37 (1.550)
72	15-82-1407		15-82-1634	15-82-1641	115.57 (4.550)	95.25 (3.750)	111.76 (4.400)	44.45 (1.750)

Plating: Post plate 200μ" min. Tin/Lead over 50μ" min. Nickel overall or post plate 30μ" min. Gold on contact area and 150μ" min. Tin/Lead on solder tails, all over 75μ" min. Nickel

1.27mm (.050") Pitch SIMM Socket

78968

Left Polarization, Right Angle Single Row, Plastic Latch

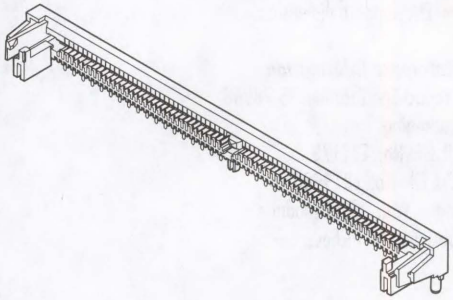

FEATURES AND SPECIFICATIONS

Features and Benefits

- Zero insertion force contacts improve socket and module contact life and provide for fast on-line assembly
- Guaranteed 2 points of contact per readout with standard JEDEC module
- Anti-overstress latch feature provides extra protection during module removal
- Polarization posts provide orientation for proper loading of socket into printed circuit board
- Polarization rib properly orients module to socket
- EIA standard dimensions

Reference Information

Product Specification: PS-78968
Packaging: Tray
UL File No.: E29179
CSA File No.: LR19980
Mates With: JEDEC modules
Designed In: Inches

Electrical

Voltage: 250V
Current: 1.0A
Contact Resistance: 30mΩ max.
Dielectric Withstanding Voltage: 1000V AC
Insulation Resistance: 5000 MΩ min.

Mechanical

Normal Force: 1.47N average
Durability: 25 cycles

Physical

Housing: Black LCP, UL 94V-0
Contact: Phosphor Bronze Alloy
Plating: See Table
Operating Temperature: -40 to +85°C

CATALOG DRAWING (FOR REFERENCE ONLY)

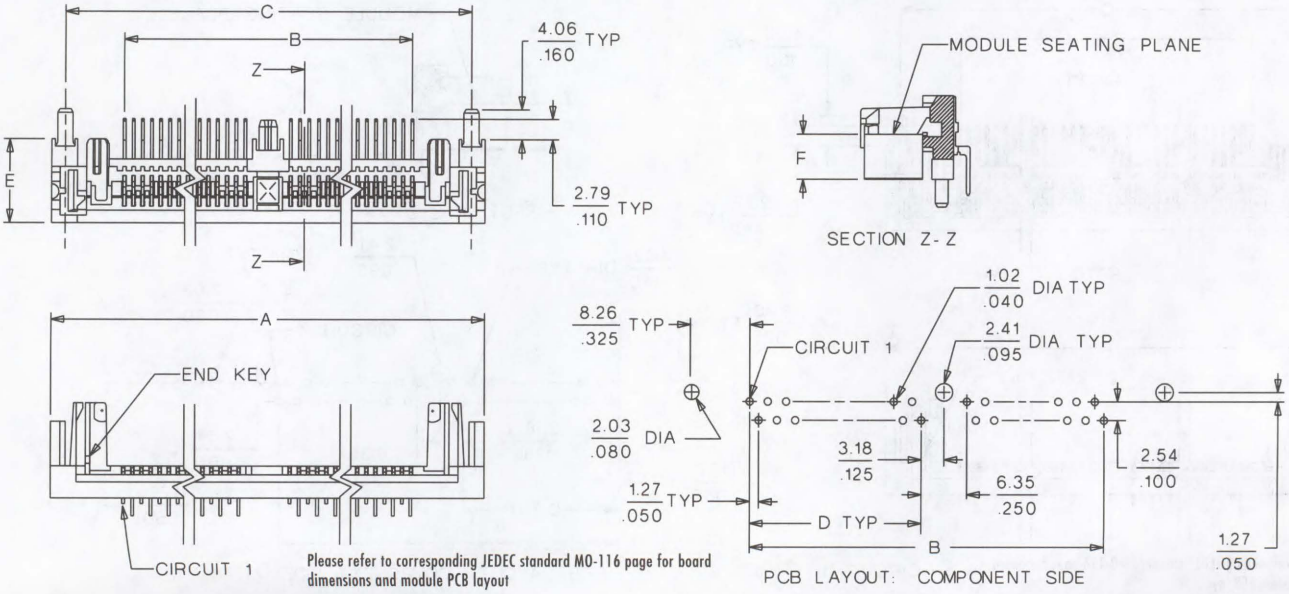

Please refer to corresponding JEDEC standard MO-116 page for board dimensions and module PCB layout

ORDERING INFORMATION AND DIMENSIONS

Circuits	Order No.							Dimension			
	.160		.190	.250		.290		A	B	C	D
	F = 4.06mm (.160")		F = 4.83mm (.190")	F = 6.35mm (.250")		F = 7.37mm (.290")					
	E = 9.09mm (.358")		E = 9.86mm (.388")	E = 11.38mm (.448")		E = 12.40mm (.488")					
	Tin	Gold	Gold	Tin	Gold	Tin	Gold				
64	15-82-1343							105.41 (4.150)	85.09 (3.350)	101.60 (4.000)	39.37 (1.550)
68				15-82-0317				110.49 (4.350)	90.17 (3.550)	106.68 (4.200)	41.91 (1.650)
72		15-82-0319	15-82-0322	15-82-0374	15-82-0375	15-82-0324	15-82-1585	115.57 (4.550)	95.25 (3.750)	111.76 (4.400)	44.45 (1.750)
80						15-82-0331		125.73 (4.950)	105.41 (4.150)	121.92 (4.800)	49.53 (1.950)
100				15-82-1509				151.13 (5.950)	130.81 (5.150)	147.32 (5.800)	62.23 (2.450)

Plating: Post plate 200μ" min. Tin/Lead over 50μ" min. Nickel overall or post plate 30μ" min. Gold on contact area and 150μ" min. Tin/Lead on solder tails, all over 75μ" min. Nickel

1.27mm (.050") Pitch SIMM Socket

78968

Right Polarization Right Angle, Single Row Plastic Latch

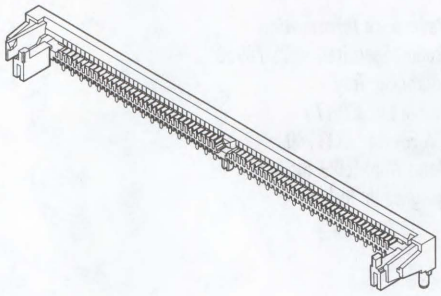

FEATURES AND SPECIFICATIONS

Features and Benefits

- Zero insertion force contacts improve socket and module contact life and provide for fast on-line assembly
- Guaranteed 2 points of contact per readout with standard JEDEC module
- Anti-overstress latch feature provides extra protection during module removal
- Polarization posts provide orientation for proper loading of socket into printed circuit board
- Polarization rib properly orients module to socket
- EIA standard dimensions

Reference Information

Product Specification: PS-78968
Packaging: Tray
UL File No.: E29179
CSA File No.: LR19980
Mates With: JEDEC modules
Designed In: Inches

Electrical

Voltage: 250V
Current: 1.0A
Contact Resistance: 30mΩ max.
Dielectric Withstanding Voltage: 1000V AC
Insulation Resistance: 5000 MΩ min.

Mechanical

Normal Force: 1.47N average
Durability: 25 cycles

Physical

Housing: Black LCP, UL 94V-0
Contact: Phosphor Bronze Alloy
Plating: See Table
Operating Temperature: -40 to +85˚C

CATALOG DRAWING (FOR REFERENCE ONLY)

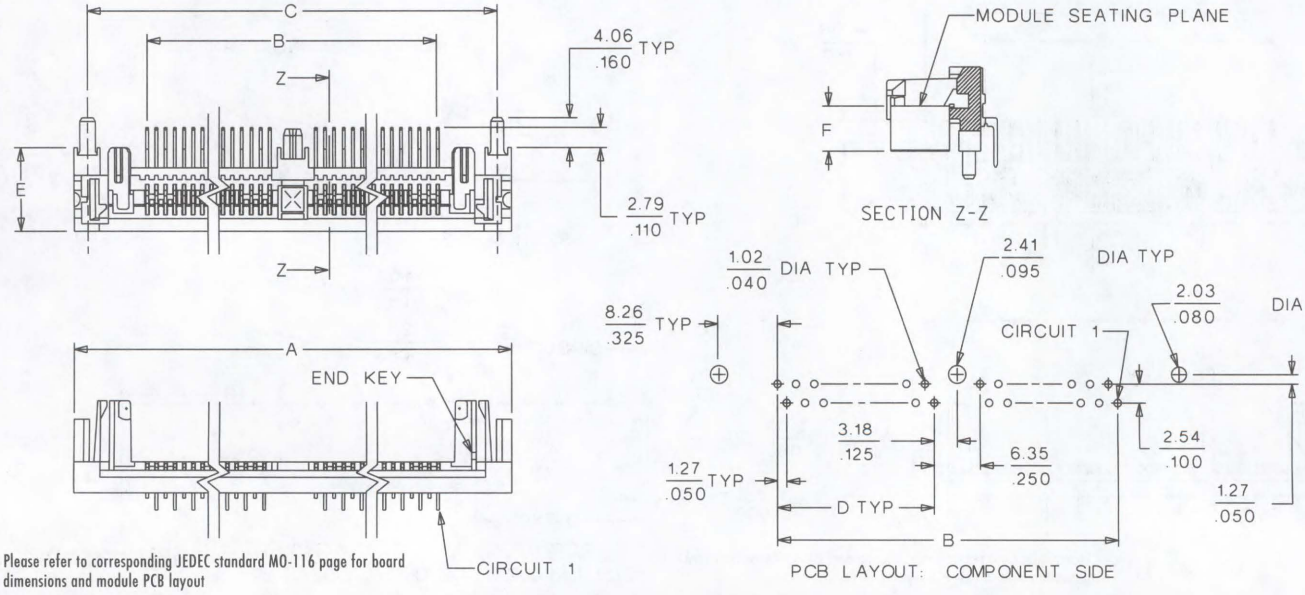

Please refer to corresponding JEDEC standard MO-116 page for board dimensions and module PCB layout

ORDERING INFORMATION AND DIMENSIONS

Circuits	Order No.			Dimension			
	.250		.290	A	B	C	D
	F = 6.35mm (.250")		F = 7.37mm (.290")				
	E = 11.38mm (.448")		E = 12.40mm (.488")				
	Tin	Gold	Tin				
64		15-82-0314		105.41 (4.150)	85.09 (3.350)	101.60 (4.000)	39.37 (1.550)
72	15-82-1519	15-82-0320	15-82-1592	115.57 (4.550)	95.25 (3.750)	111.76 (4.400)	44.45 (1.750)

Plating: Post plate 200μ" min. Tin/Lead over 50μ" min. Nickel overall or post plate 30μ" min. Gold on contact area and 150μ" min. Tin/Lead on solder tails, all over 75μ" min. Nickel

1.27mm (.050") Pitch SIMM Socket

78968

Left Polarization, Right Angle Single Row, Metal Latch SMT

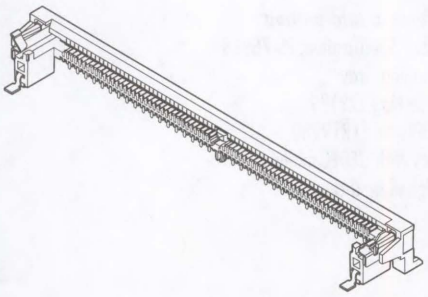

FEATURES AND SPECIFICATIONS

Features and Benefits

- Zero insertion force contacts improve socket and module contact life and provide for fast on-line assembly
- Guaranteed 2 points of contact per readout with standard JEDEC module
- Anti-overstress latch feature provides extra protection during module removal
- Polarization posts provide orientation for proper loading of socket into printed circuit board
- Polarization rib properly orients module to socket
- EIA standard dimensions

Reference Information

Product Specification: PS-78968
Packaging: Tray
UL File No.: E29179
CSA File No.: LR19980
Mates With: JEDEC modules
Designed In: Inches

Electrical

Voltage: 250V
Current: 1.0A
Contact Resistance: 30mΩ max.
Dielectric Withstanding Voltage: 1000V AC
Insulation Resistance: 5000 MΩ min.

Mechanical

Normal Force: 1.47N average
Durability: 25 cycles

Physical

Housing: Black LCP, UL 94V-0
Latch: Stainless Steel
Contact: Phosphor Bronze Alloy
Plating: See Table
Operating Temperature: -40 to +85°C

CATALOG DRAWING (FOR REFERENCE ONLY)

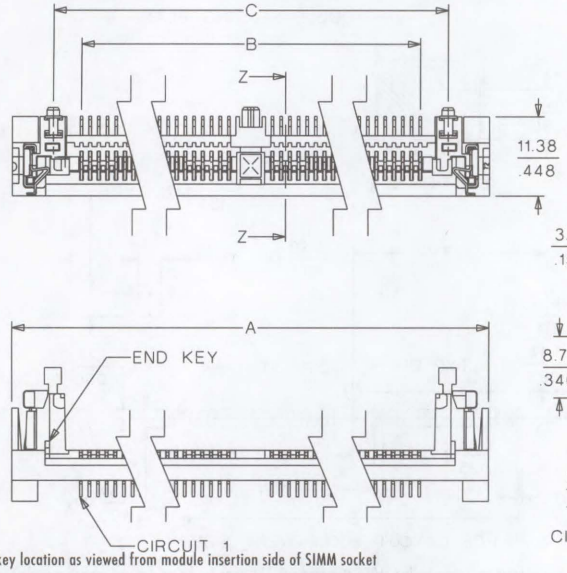

Polarization key location as viewed from module insertion side of SIMM socket
Circuit 1, polarization key and small post are located at the same end, whether right or left

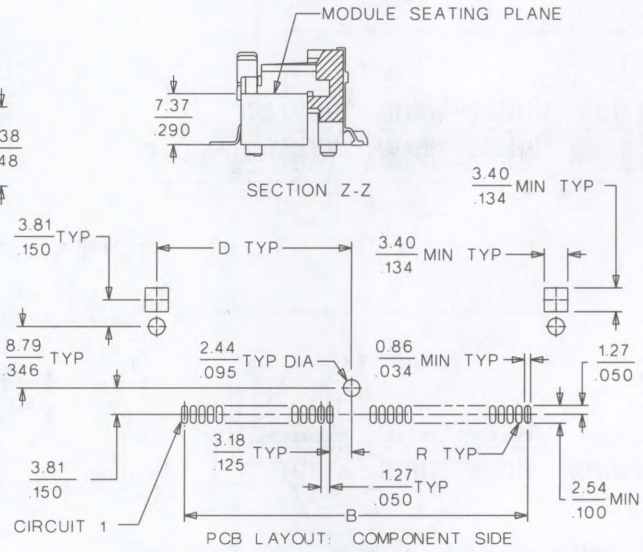

Please refer to corresponding JEDEC standard MO-116 page for board dimensions and module PCB layout

ORDERING INFORMATION AND DIMENSIONS

Circuits	Order No.		Dimension			
	Tin	Gold	A	B	C	D
72	15-82-1655	15-82-0328	115.57 (4.550)	95.25 (3.750)	103.48 (4.074)	51.74 (2.037)

Plating: Post plate 200μ" min. Tin/Lead over 50μ" min. Nickel overall or post plate 30μ" min. Gold on contact area and 150μ" min. Tin/Lead on solder tails, all over 75μ" min. Nickel

1.27mm (.050") Pitch SIMM Socket

78968

Right Polarization, Right Angle, Single Row Metal Latch, SMT

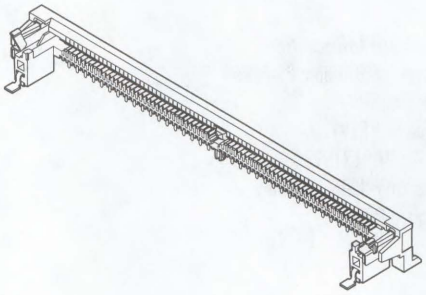

FEATURES AND SPECIFICATIONS

Features and Benefits

- Zero insertion force contacts improve socket and module contact life and provide for fast on-line assembly
- Guaranteed 2 points of contact per readout with standard JEDEC module
- Anti-overstress latch feature provides extra protection during module removal
- Polarization posts provide orientation for proper loading of socket into printed circuit board
- Polarization rib properly orients module to socket
- EIA standard dimensions

Reference Information

Product Specification: PS-78968
Packaging: Tray
UL File No.: E29179
CSA File No.: LR19980
Mates With: JEDEC modules
Designed In: Inches

Electrical

Voltage: 250V
Current: 1.0A
Contact Resistance: 30mΩ max.
Dielectric Withstanding Voltage: 1000V AC
Insulation Resistance: 5000 MΩ min.

Mechanical

Normal Force: 1.47N average
Durability: 25 cycles

Physical

Housing: Black LCP, UL 94V-0
Latch: Stainless Steel
Contact: Phosphor Bronze Alloy
Plating: See Table
Operating Temperature: -40 to +85°C

CATALOG DRAWING (FOR REFERENCE ONLY)

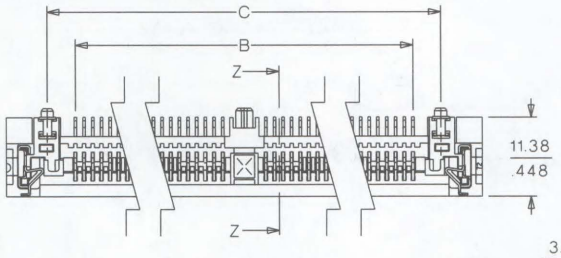

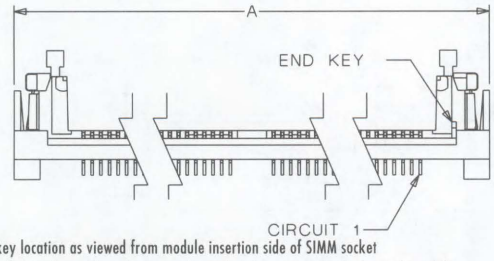

Polarization key location as viewed from module insertion side of SIMM socket
Circuit 1, polarization key and small post are located at the same end, whether right or left

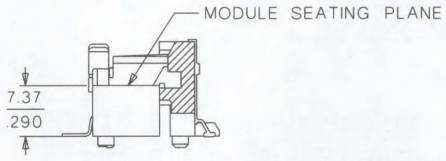

SECTION Z-Z

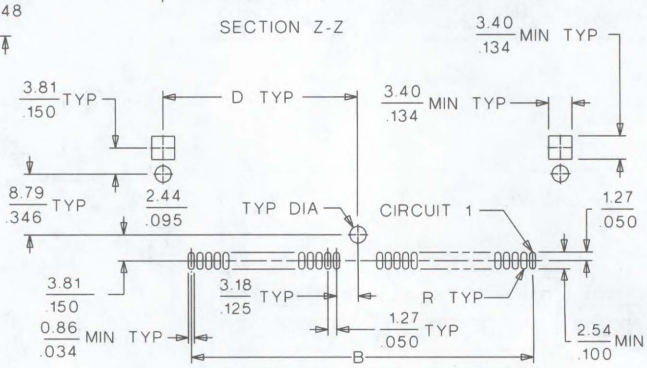

PCB LAYOUT: COMPONENT SIDE

Please refer to corresponding JEDEC standard MO-116 page for board dimensions and module PCB layout

ORDERING INFORMATION AND DIMENSIONS

Circuits	Order No.		Dimension			
	Tin	Gold	A	B	C	D
72	15-82-1662	15-82-1669	115.57 (4.550)	95.25 (3.750)	103.48 (4.074)	51.74 (2.037)

Plating: Post plate 200μ" min. Tin/Lead over 50μ" min. Nickel overall or post plate 30μ" min. Gold on contact area and 150μ" min. Tin/Lead on solder tails, all over 75μ" min. Nickel

1.00mm (.039") Pitch RIMM Socket

73811

Low Profile, Multiple Key Vertical, Through-Hole

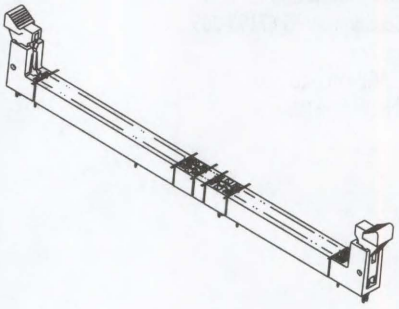

FEATURES AND SPECIFICATIONS

Features and Benefits

- Accepts RIMM modules; stackable on 7.80mm (.305") centers
- Smooth stamped contact surface reduces debris at interface
- Dual latches provide easy module removal
- Module prealignment feature prior to contact engagement eliminates misregistration
- Positive latch detent improves module retention to connector
- Narrow profile allows better air flow

Reference Information

Product Specification: PS-73811-0001
Packaging: Tray
UL File No.: E29179
CSA File No.: LR19980
Mates With: EIA 364 standard 1.27mm (.050") thick PCB module
Designed In: Millimeters

Electrical

Voltage: 100V
Current: 0.5A
Contact Resistance: 20mΩ max.
Dielectric Withstanding Voltage: 500V AC
Insulation Resistance: 1000 MΩ min.

Mechanical

Mating Force: 1.694N (0.38 lb) max. per terminal pair
Unmating Force: 0.713N (0.16 lb) max. per terminal pair
Normal Force: 0.49N min.
Durability: 25 cycles max.

Physical

Housing: Black high-temperature thermoplastic, UL 94V-0
Contact: Copper Alloy
Plating: Contact Area—Gold or Gold-compatible
Solder Tail Area—Tin/Lead
Underplating—Nickel
Operating Temperature: -40 to +85°C

CATALOG DRAWING (FOR REFERENCE ONLY)

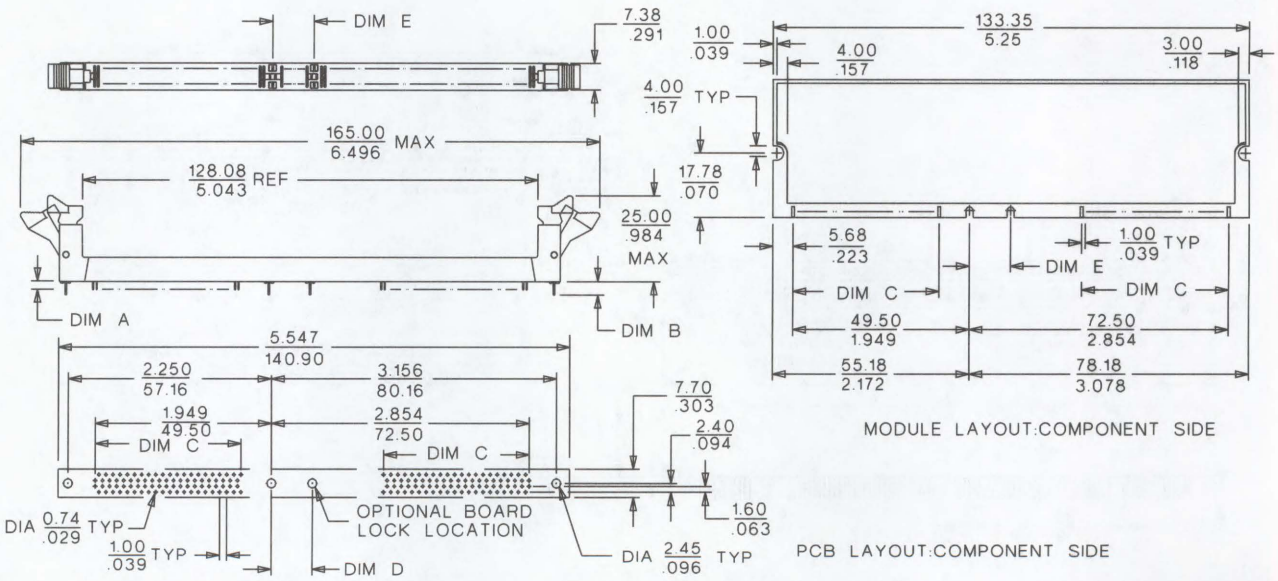

ORDERING INFORMATION AND DIMENSIONS

Circuits	Order No.	Dimension				
		A	B	C	D	E
168	73811-1001	2.50 (.098)	4.20 (.165)	41.00 (1.614)	11.50 (.453)	11.50 (.453)
	73811-1002	3.30 (.130)	4.20 (.165)	41.00 (1.614)	11.50 (.453)	11.50 (.453)
184	73811-1301	2.50 (.098)	4.20 (.165)	45.00 (1.772)	11.50 (.453)	11.50 (.453)
	73811-1302	3.30 (.130)	4.20 (.165)	45.00 (1.772)	11.50 (.453)	11.50 (.453)

1.00mm (.039") Pitch Universal AGP Pro Edge Card Connector

67193

180 Circuit, Vertical Double-Sided, Dual Read-Out

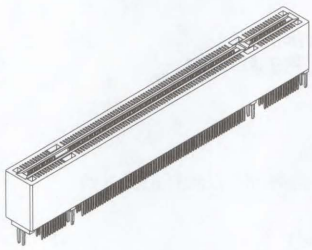

FEATURES AND SPECIFICATIONS

Features and Benefits

- Used with accelerated graphics pro (AGP-Pro) card
- Interconnect supports high performance 3D graphics and full motion video
- Compatible with AGP-Pro 1x, 2x, 4x
- Provides low card insertion force
- Multiple keys prevent mismating
- Metal forklock provides strong PCB retention

Reference Information

Product Specification: PS-67193-005
Packaging: Box
Use With: AGP-Pro card
Designed In: Millimeters

Electrical

Voltage: 500V AC
Current: 1.0A max.
Contact Resistance: Initial —30mΩ max.
Delta Change—30mΩ max.
Dielectric Withstanding Voltage: 400V AC
Insulation Resistance: 800 MΩ min.

Mechanical

Contact Retention to Housing: 2.94N (0.66 lb) min.
Mating Force: 117.6N (26.34 lb) max.
Unmating Force: 49.98N (11.20 lb) min.
Forklock Retention Force: 24.5N (5.49 lb) min.
Durability: 50 cycles max.

Physical

Housing: Brown high-temperature thermoplastic, UL 94V-0
Contact: Copper Alloy
Plating: See Table
Operating Temperature: -55 to +105°C

CATALOG DRAWING (FOR REFERENCE ONLY)

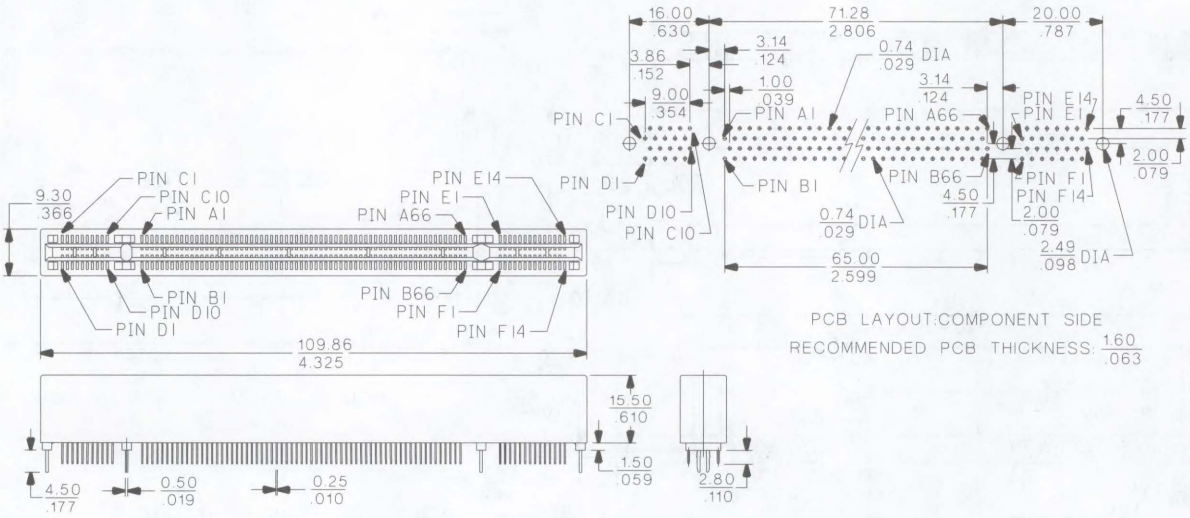

ORDERING INFORMATION AND DIMENSIONS

Circuits	Order No.	Plating
180	67193-0021	Gold over Palladium/Nickel over Nickel
	67193-0022	Gold over Nickel

1.27mm (.050") Pitch Micro PGA Socket

54565

SMT, ZIF
495 Circuits

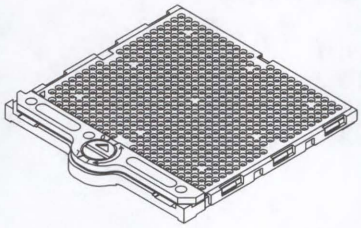

FEATURES AND SPECIFICATIONS

Features and Benefits

- 495 circuit for Mobile Pentium* III processors
- Ultra low profile of 2.00mm (.079")
- Over 60% PCB space savings versus previous module-style mobile processor packaging
- Easy-to-use cam mechanism provides smooth contact engagement and secure locking
- Dual-beam contact provides low inductance and low conductor resistance
- Compliant SMT leads ensure good solder joint reliability

Reference Information

Product Specification: PS-54565-016
Designed In: Millimeters

Electrical

Voltage: 100V
Current: 0.5A
Contact Resistance: 20mΩ max.
Dielectric Withstanding Voltage: 200V AC/1 min.
Insulation Resistance: 1000 MΩ min.
Capacitance: 1.53pf max.

Mechanical

Durability: 30 cycles

Physical

Housing: Brown glass-filled LCP, UL 94V-0
Contact: Phosphor Bronze
Plating: Contact Area—Gold over Nickel
Solder Tail Area—Gold flash
Operating Temperature: 0 to +90°C

CATALOG DRAWING (FOR REFERENCE ONLY)

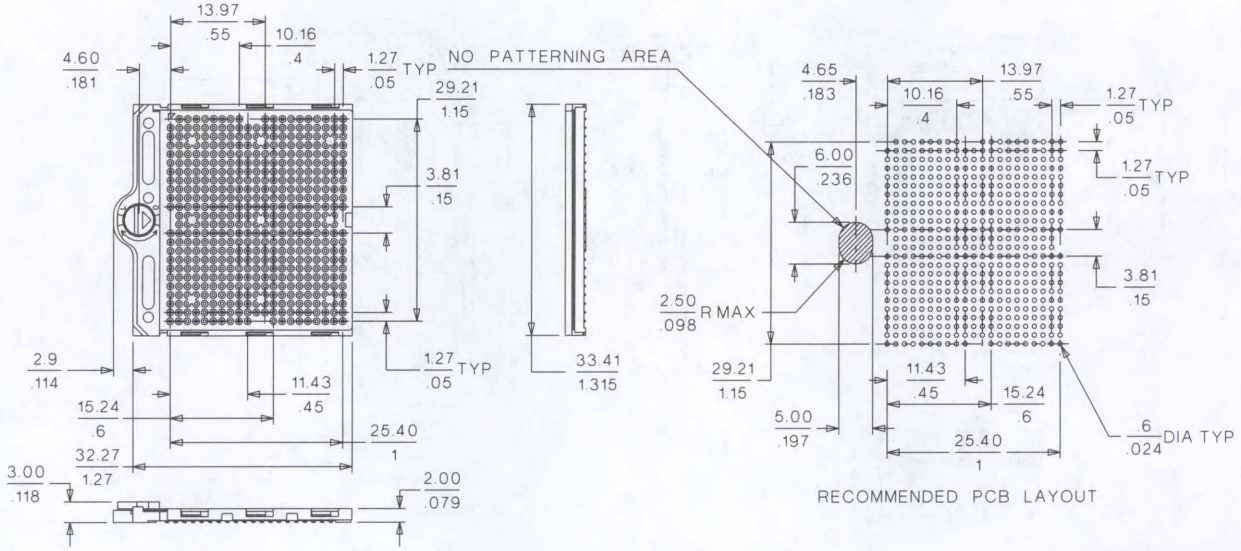

ORDERING INFORMATION

Order No.
54565-4955

* Pentium is a registered trademark of Intel Corporation

1.27mm (0.05") Pitch ZIF PGA Socket

89235

Socket 370

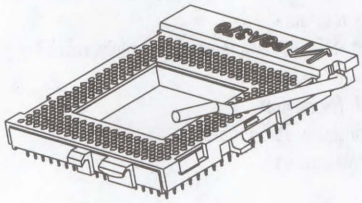

FEATURES AND SPECIFICATIONS

Features and Benefits

- Size 370 circuits
- ZIF actuator enables easy replacement/upgrade of microprocessor
- Robust stainless steel crank arm
- Surface Mount Compatible
- Universal lock-unlock indicator

Reference Information

Product Specification: PS-89235a
Packaging: Tray
UL File No.: E29179
CSA File No.: 19980
Mates With: 370 pin microprocessor
Designed In: Millimeters

Electrical

Voltage: 2.0V DC
Current: 1.0A
Contact Resistance: 20mΩ max.
Dielectric Withstanding Voltage: 1000V AC
Insulation Resistance: 1000 MΩ min.

Mechanical

Contact Retention to Housing: 300mg load per contact
Normal Force: 0.55N (0.124 lb) min.
Durability: 50 cycles min.

Physical

Housing: LCP, UL 94V-0
Contact: Phosphor Bronze
Plating: See Table
Operating Temperature: -40 to +105°C

CATALOG DRAWING (FOR REFERENCE ONLY)

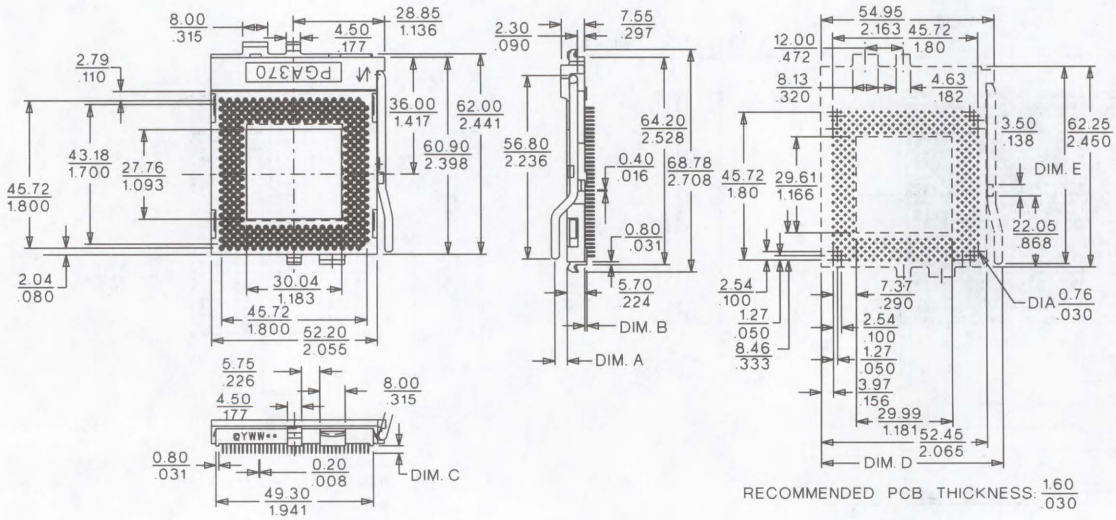

ORDERING INFORMATION AND DIMENSIONS

Order No.				PC Tail Length	Top Face to Crank Arm Tip
Gold Flash	10μ" Gold	15μ" Gold	30μ" Gold		
89235-3700	89235-3701	89235-3703	89235-3702	2.49 (0.980)	4.90 (1.930)
89235-3704	89235-3705	89235-3707	89235-3706	2.49 (0.980)	1.27 (0.500)
89235-3708	89235-3709	89235-3711	89235-3710	2.34 (0.920)	4.90 (1.930)
89235-3712	89235-3713	89235-3715	89235-3714	2.34 (0.920)	1.27 (0.500)

1.90mm (.075") Pitch SIP Socket

94123

2 Circuit SMT Bottom Entry For Microphones

FEATURES AND SPECIFICATIONS

Features and Benefits

- Stamped "four beam" contact
- SMT soldering tabs
- Suitable for round pins
- Anti-solderwicking feature

Reference Information

Product Specification: PS-94123-007
Packaging: Tape and reel
Designed In: Millimeters

Electrical

Voltage: 125V
Current: 1.0A
Contact Resistance: 15mΩ max.
Dielectric Withstanding Voltage: 1000V
Insulation Resistance: 5000 MΩ min.

Mechanical

Contact Insertion Force: 3.5N max.
Contact Retention to Housing: 1.5N min.

Physical

Housing: Black glass-filled PA 4.6
Contact: Phosphor Bronze
Plating: Preplated Tin
Operating Temperature: -40 to +85°C

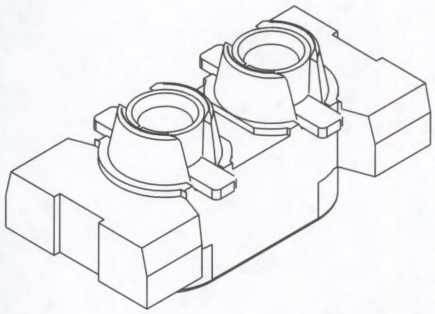

CATALOG DRAWING (FOR REFERENCE ONLY)

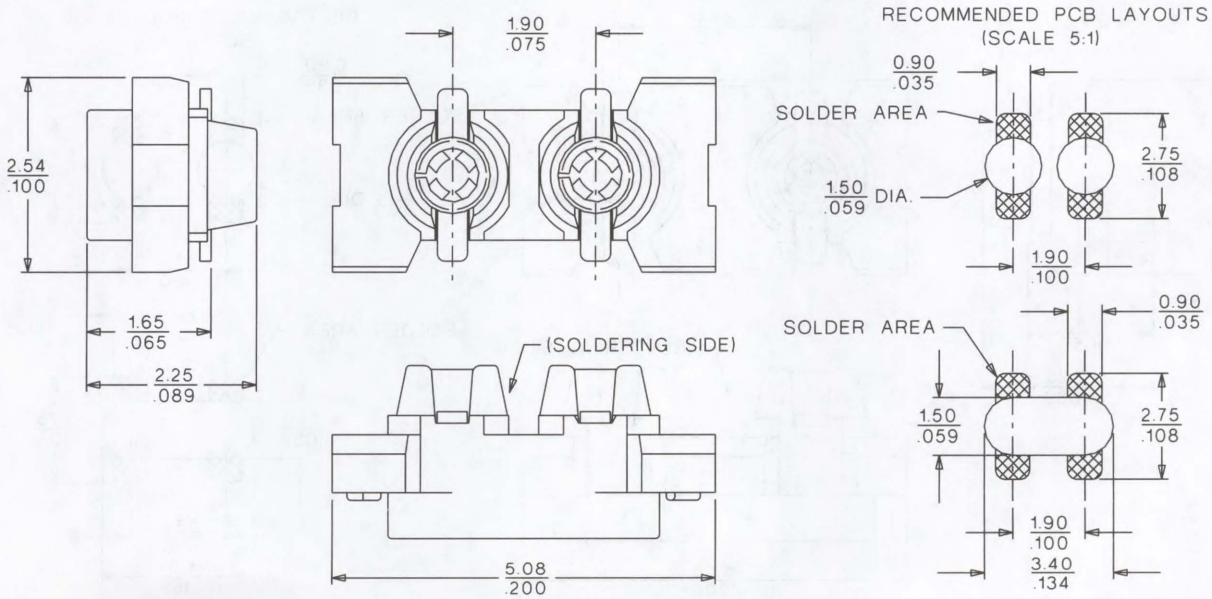

ORDERING INFORMATION

Circuits	Order No.
2	94123-1002

2.54mm (.100") Pitch SIP Socket

94123

2 Circuit SMT Bottom Entry For Microphones

FEATURES AND SPECIFICATIONS

Features and Benefits

- Stamped "four beam" contact
- SMT soldering tabs
- Suitable for round pins
- Anti-solderwicking feature

Reference Information

Product Specification: PS-94123-007
Packaging: Tape and reel
Designed In: Millimeters

Electrical

Voltage: 125V
Current: 1.0A
Contact Resistance: 15mΩ max.
Dielectric Withstanding Voltage: 1000V
Insulation Resistance: 5000 MΩ min.

Mechanical

Contact Insertion Force: 3.5N max.
Contact Retention to Housing: 1.5N min.

Physical

Housing: Black glass-filled PA 4.6
Contact: Phosphor Bronze
Plating: Preplated Tin
Operating Temperature: -40 to +85°C

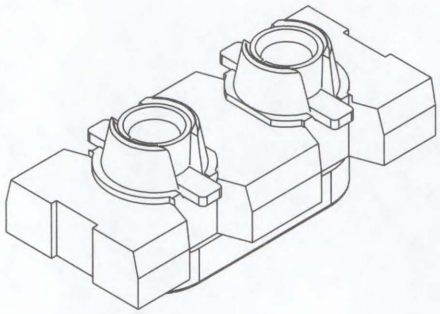

CATALOG DRAWING (FOR REFERENCE ONLY)

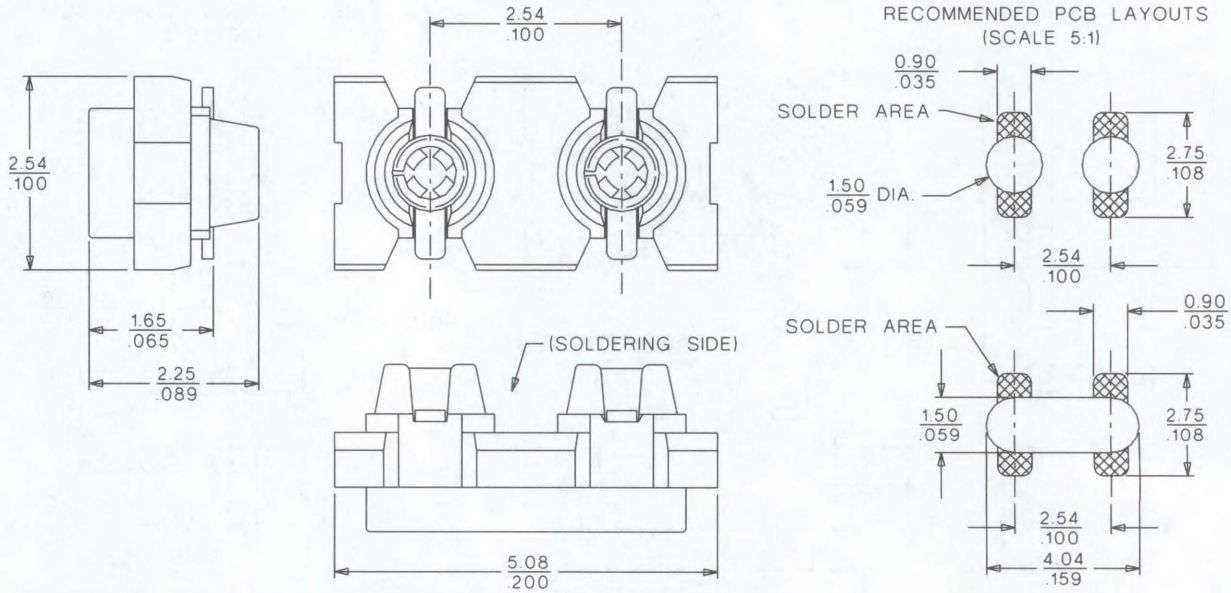

ORDERING INFORMATION

Circuits	Order No.
2	94123-0002

1.90mm (.075") Pitch SIP Socket

94125

2 Circuit SMT Bottom Entry for Microphones

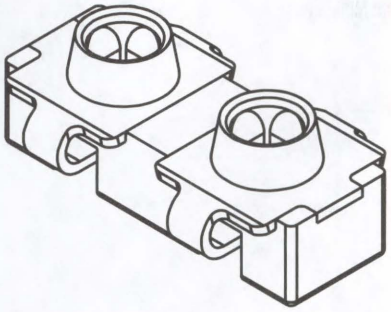

FEATURES AND SPECIFICATIONS

Features and Benefits

- SMT large soldering tabs
- Suitable for round and square pins
- Metal shielded
- Low mating force
- Good pin guidance
- Insert molded

Reference Information

Product Specification: PS-94125-001
Packaging: Tape and reel
Designed In: Millimeters

Electrical

Voltage: 125V
Current: 1.0A max.
Contact Resistance: 30mΩ max.
Dielectric Withstanding Voltage: 500V
Insulation Resistance: 5000 MΩ min.

Mechanical

Contact Insertion Force: 20N (4.50 lb) max.
Contact Retention to Housing: 2N (0.45 lb) min.
Mating Force: 8N (1.80 lb) max.
Normal Force: 1.2N (0.27 lb) min.
Durability: 50 cycles

Physical

Housing: Black LCP, UL 94V-0
Contact: Phosphor Bronze
Plating: Tin
Pin Length: 2.80mm (.110") min.
PCB Thickness: 0.60 to 1.20mm (.024 to .047")
Operating Temperature: -40 to +85°C

CATALOG DRAWING (FOR REFERENCE ONLY)

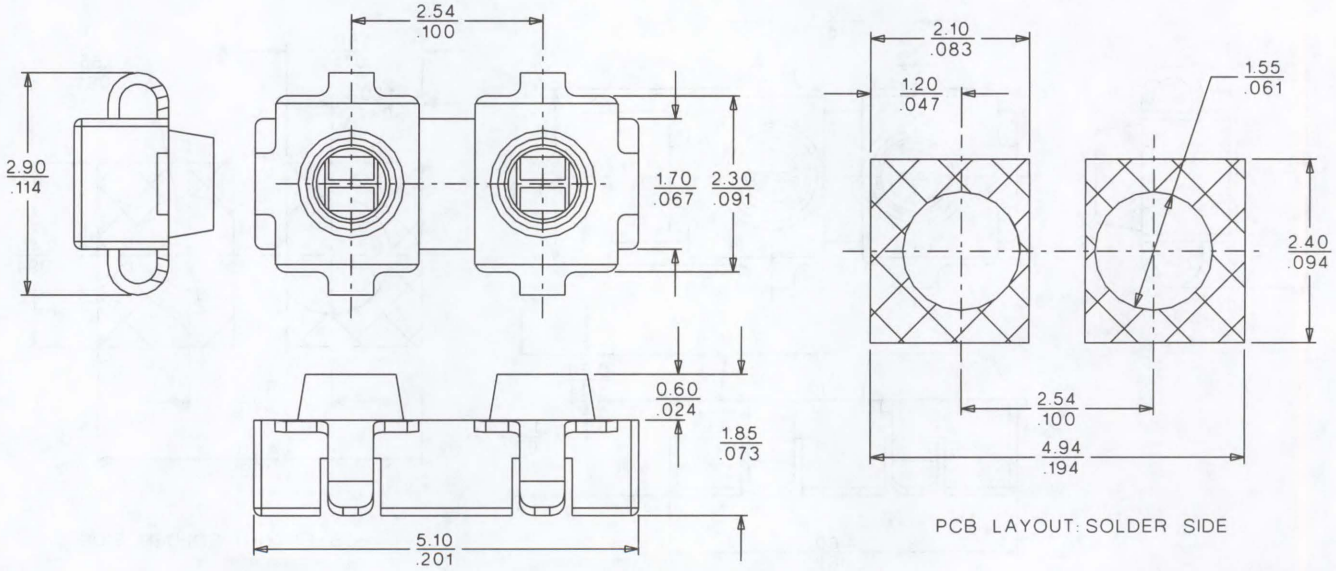

ORDERING INFORMATION AND DIMENSIONS

Order No.	Pin Diameter/Diagonal
94125-5102	0.40-0.60 (.016-.024)
94125-5112	0.40 (.016)

2.54mm (.100") Pitch SIP Socket

94125

2 Circuit SMT Bottom Entry for Microphones

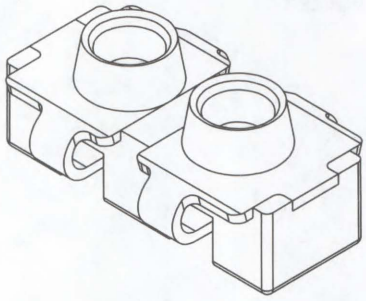

FEATURES AND SPECIFICATIONS

Features and Benefits
- SMT large soldering tabs
- Suitable for round and square pins
- Metal shielded
- Low mating force
- Good pin guidance
- Insert molded

Reference Information
Product Specification: PS-94125-001
Packaging: Tape and reel
Designed In: Millimeters

Electrical
Voltage: 125V
Current: 1.0A max.
Contact Resistance: 30mΩ max.
Dielectric Withstanding Voltage: 500V
Insulation Resistance: 5000 MΩ min.

Mechanical
Contact Insertion Force: 20N (4.50 lb) max.
Contact Retention to Housing: 2N (0.45 lb) min.
Mating Force: 8N (1.80 lb) max.
Normal Force: 1.2N (0.27 lb) min.
Durability: 50 cycles

Physical
Housing: Black LCP, UL 94V-0
Contact: Phosphor Bronze
Plating: Tin
Pin Length: 2.80mm (.110") min.
PCB Thickness: 0.60 to 1.20mm (.024 to .047")
Operating Temperature: -40 to +85°C

CATALOG DRAWING (FOR REFERENCE ONLY)

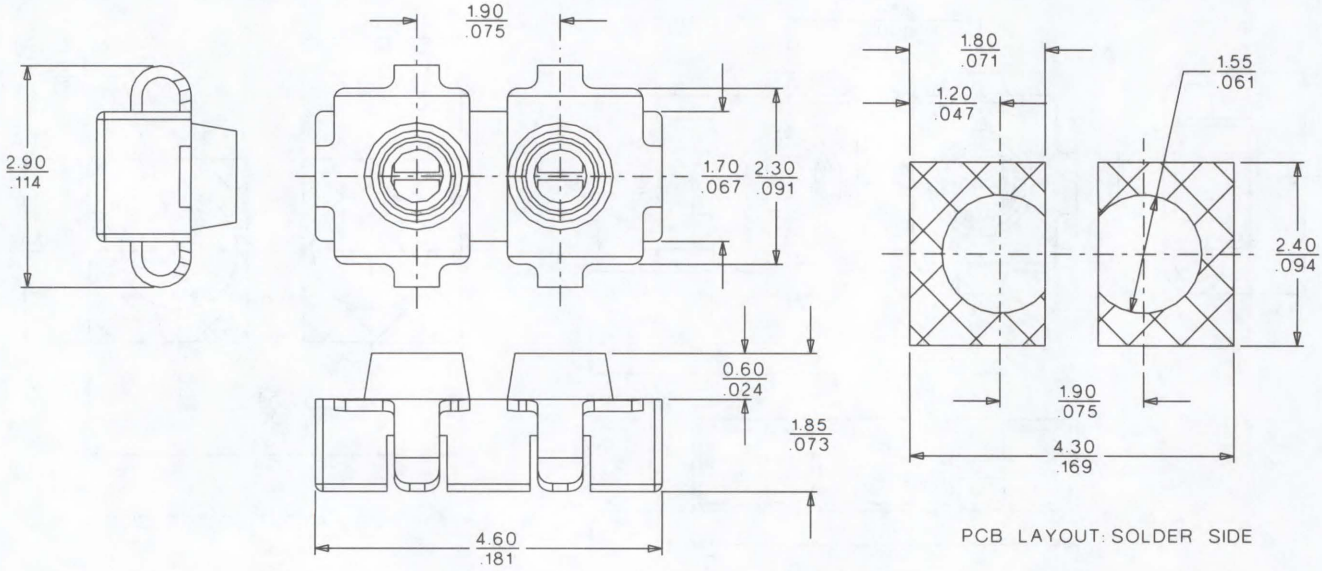

ORDERING INFORMATION AND DIMENSIONS

Order No.	Pin Diameter/Diagonal
94125-5002	0.40-0.65 (.016-.026)

2.54mm (.100") Pitch Transistor Sockets

4025

Crimp Type

These sockets allow the use of transistors when a PC board is not set up to use a direct solder socket. The double cantilever terminal allows linear movement in the socket and maintains consistent contact reliability.

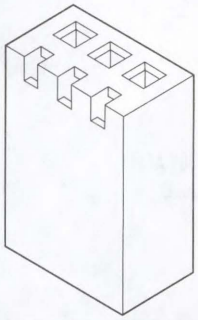

FEATURES AND SPECIFICATIONS

Reference Information
Packaging: Bulk
Use With: 2759 and 6459 terminals
Designed In: Inches

Electrical
Voltage: 250V
Current: 4.0A
Contact Resistance: 20mΩ max.
Dielectric Withstanding Voltage: 1500V AC
Insulation Resistance: 50,000 MΩ min.

Mechanical
Contact Insertion Force: 681g (1.51 lb) max.
Contact Retention to Housing: 3.63kg (8 lb) min.
Wire Pull-Out Force:

AWG	22	24	26	28	30
Pull Out (lb)	10	8	6	4	3

Mating Force: 199g (7.0 oz)
Unmating Force: 57g (2.0 oz)
Normal Force: 300g average
Durability: 25 cycles

Physical
Housing: Polyester, UL 94V-0
Operating Temperature: 0 to +75 °C

CATALOG DRAWING (FOR REFERENCE ONLY)

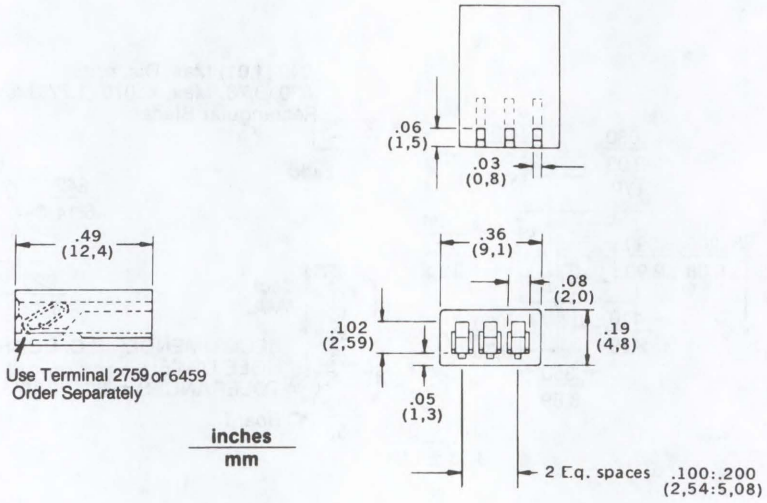

ORDERING INFORMATION

Order No.
10-17-2032

2.54mm (.100") Pitch Transistor Socket

2512

Staggered Row

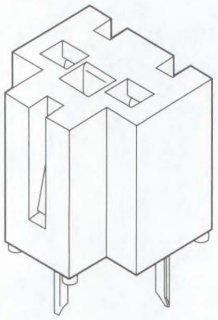

FEATURES AND SPECIFICATIONS

Features and Benefits

- 2512 features PC solder tails

These 3-circuit transistor sockets are preassembled and ready for soldering to a PC board. The proven double cantilever design virtually eliminates circuit failure due to thermal expansion and/or mechanical tolerances. Linear movement of the transistor leads in the socket does not affect contact reliability.

Reference Information

Packaging: Bulk
Designed In: Inches

Electrical

Voltage: 250V
Current: 4.0A
Contact Resistance: 20mΩ max.
Dielectric Withstanding Voltage: 1500V AC
Insulation Resistance: 50,000 MΩ min.

Mechanical

Contact Retention to Housing: 3.63kg (8 lb) min.
Mating Force: 199g (7.0 oz)
Unmating Force: 57g (2.0 oz)
Normal Force: 300g average
Durability: 25 cycles

Physical

Housing: 2512—Nylon, UL 94V-2
Contact: Brass
Plating: See Table
Operating Temperature: 0 to +75°C

CATALOG DRAWING (FOR REFERENCE ONLY)

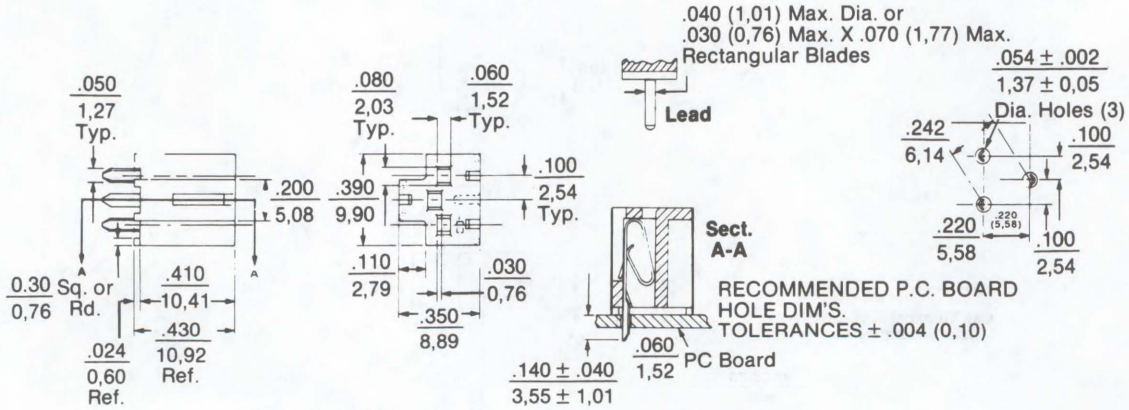

ORDERING INFORMATION

Tin-Plated Brass Order No.
09-48-3031
09-48-3032*

*Terminal design different to reduce mating force; contact Molex for drawing

2.54mm (.100") Pitch Single In-Line IC Socket

94100

Low Profile

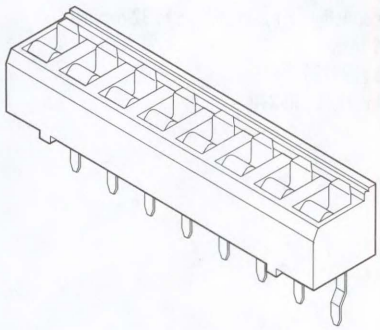

FEATURES AND SPECIFICATIONS

Features and Benefits

- Dual beam contact
- Large target entry area for IC leads
- Closed bottom
- PC tail retention

Reference Information

Product Specification: PS-94100
Packaging: Tube
Designed In: Inches

Electrical

Voltage: 250V
Current: 1.0A at 20°C
Contact Resistance: 15mΩ max.
Dielectric Withstanding Voltage: 1000V rms
Insulation Resistance: 5000 MΩ min.

Mechanical

Contact Retention to Housing: 400g min.
Mating Force: 340g max.
Unmating Force: 25g per circuit min.

Physical

Housing: Black glass-filled polyester, UL 94V-0
Contact: Phosphor Bronze
Plating: Pretinned
Operating Temperature: -40 to +105°C

CATALOG DRAWING (FOR REFERENCE ONLY)

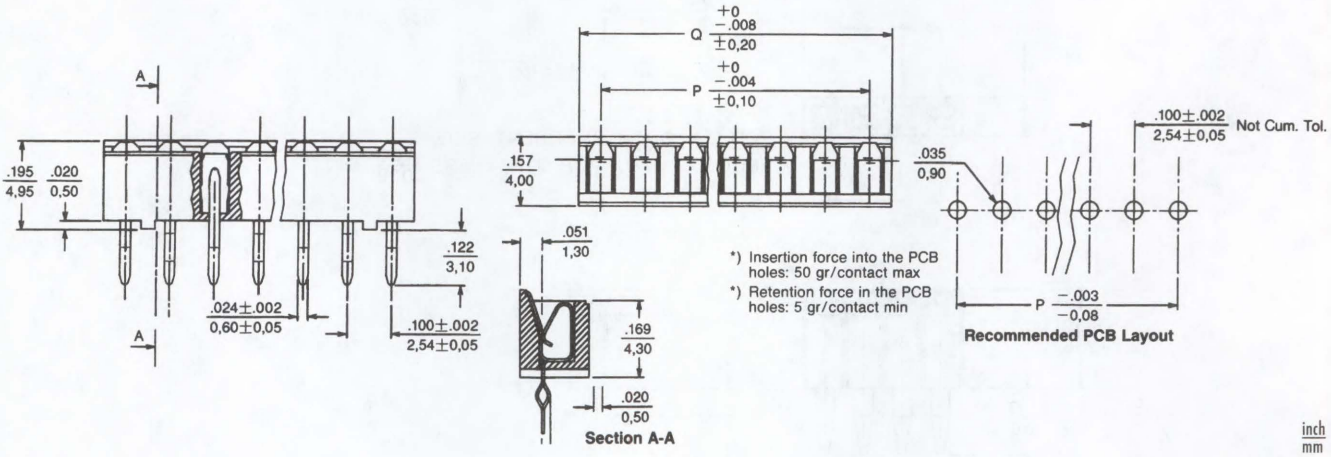

ORDERING INFORMATION AND DIMENSIONS

Circuits	Order No.	Dimension	
		P	Q
7	94100-0107	15.24 (.600)	17.78 (.700)
8	94100-0108	17.78 (.700)	20.32 (.800)
12	94100-0112	27.94 (1.100)	30.48 (1.200)
14	94100-0114	33.02 (1.300)	35.56 (1.400)
16	94100-0116	38.10 (1.500)	40.64 (1.600)
20	94100-0120	48.26 (1.900)	50.80 (2.000)
35	94100-0235*	86.36 (3.400)	88.90 (3.500)

* Not kinked version

2.54mm (.100") Pitch Single In-Line IC Socket

85320

Press-Fit

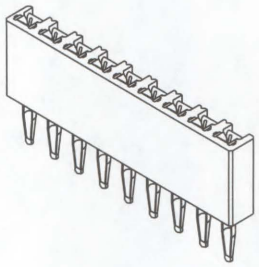

FEATURES AND SPECIFICATIONS

Features and Benefits

- Sizes 4 to 48 circuits
- Solderless press-fit C-pin termination
- Single beam contact

Reference Information

Product Specification: PS-85320
Packaging: Bag
Tooling Information: Press-in tool (up to 32 circuits)
85389-0000
UL File No.: E29179
CSA File No.: LR19980-390

Electrical

Current: 0.05A
Contact Resistance: 20mΩ max.
Insulation Resistance: 10 MΩ min.

Mechanical

Normal Force: 1.8N min.

Physical

Housing: Black polyetherimid, UL 94V-0
Contact: Copper Alloy
Plating: Tin/Lead
Operating Temperature: -40 to +140°C

CATALOG DRAWING (FOR REFERENCE ONLY)

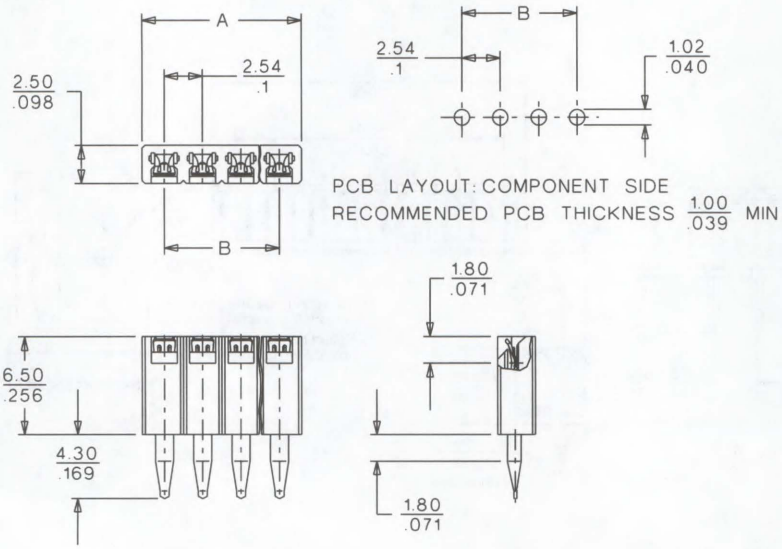

ORDERING INFORMATION AND DIMENSIONS

Circuits	Order No.	Dimension	
		A	B
4	85320-0220	10.76 (.424)	7.62 (.300)
5	85320-0127	13.30 (.524)	10.16 (.400)
6	85320-0232	15.84 (.624)	12.70 (.500)
7	85320-0115	18.38 (.724)	15.24 (.600)
8	85320-0244	20.92 (.824)	17.78 (.700)
9	85320-0256	22.46 (.924)	20.32 (.800)
10	85320-0206	26.00 (1.024)	22.86 (.900)
12	85320-0658	31.08 (1.224)	27.94 (1.100)
14	85320-0268	36.16 (1.424)	33.02 (1.300)
16	85320-0660	41.24 (1.624)	38.10 (1.500)
20	85320-0270	51.40 (2.024)	48.26 (1.900)
24	85320-0672	61.56 (2.424)	58.42 (2.300)
30	85320-0282	76.80 (3.024)	73.66 (2.900)
32	85320-0048	81.88 (3.224)	78.74 (3.100)
34	85320-0218	86.96 (3.424)	83.82 (3.300)
48	85320-0000	122.52 (4.824)	119.38 (4.700)

0.80mm (.032") Pitch Board-to-Board Edge Card Connector

35884

Vertical, SMT

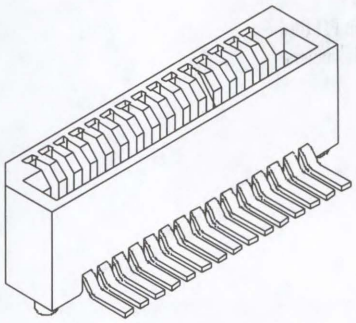

FEATURES AND SPECIFICATIONS

Features and Benefits

- Size 15 circuits
- For 0.60mm (.002") thick steel cardedge

Reference Information

Product Specification: PS-35884-001
Packaging: Tube
Designed In: Millimeters

Electrical

Voltage: 50V
Current: 0.5A
Contact Resistance: 30mΩ max.
Dielectric Withstanding Voltage: 500V
Insulation Resistance: 500 MΩ min.

Mechanical

Mating Force: 24.0N (5.4 lb) max.
Unmating Force: 2.9N (0.7 lb) min.
Durability: 30 cycles

Physical

Housing: Natural Glass-filled PPS, UL 94V-0
Contact: Phosphor Bronze
Plating: Conatact Area—Gold 0.3μm min.
Solder Tail Area—2 to 3μm Tin/Lead
Underplating—Nickel 2μm overall
Operating Temperature: -40 to +80°C

CATALOG DRAWING (FOR REFERENCE ONLY)

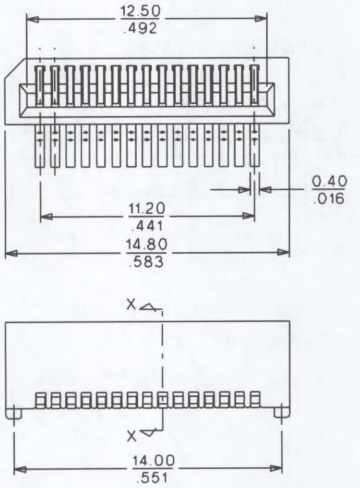

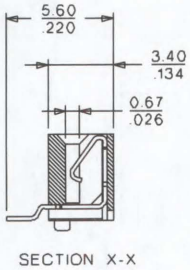

SECTION X-X

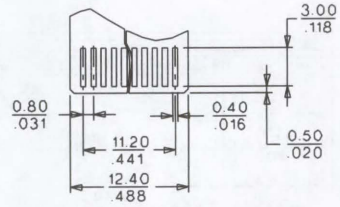

STEEL CARDEDGE LAYOUT

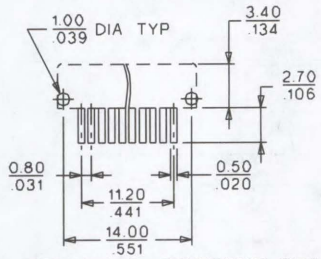

PCB LAYOUT : COMPONENT SIDE

ORDERING INFORMATION

Circuit	Order No.
15	35884-1519

1.27mm (.050") Pitch Compact PCI Slot Board-to-Board Edge Card Connector

89177

120 Circuit, Vertical Double-Sided, Dual Read-Out

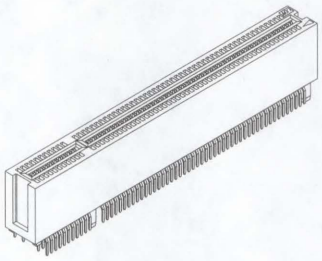

FEATURES AND SPECIFICATIONS

Features and Benefits

- Compatible with 32-bit PCI card
- Optional for 3.3 to 5.0V card configuration
- Provides low card insertion force
- Surface Mount Compatible
- Locating pegs for PCB retention

Reference Information

Product Specification: PS-89177
Packaging: Box
Use With: 32-bit PCI card
Designed In: Millimeters

Electrical

Voltage: 500V AC
Current: 1.0A max.
Contact Resistance: 30mΩ max.
Dielectric Withstanding Voltage: 500V AC
Insulation Resistance: 1,000 MΩ min.

Mechanical

Contact Retention to Housing: 2.94N (0.66 lb) min.
Insertion Force to PCB: 2.254N (0.511 lb) min.
Withdrawal Force: 0.254N (0.057 lb) min.
Mating Force: 117.6N (26.34 lb) max.
Unmating Force: 9.8N (2.20 lb) min.
Durability: 50 cycles max.

Physical

Housing: Brown glass-filled PPS, UL 94V-0
Contact: Phosphor Bronze
Plating: Contact Area—Gold over Tin
Terminal—Nickel
Operating Temperature: -55 to +105°C

CATALOG DRAWING (FOR REFERENCE ONLY)

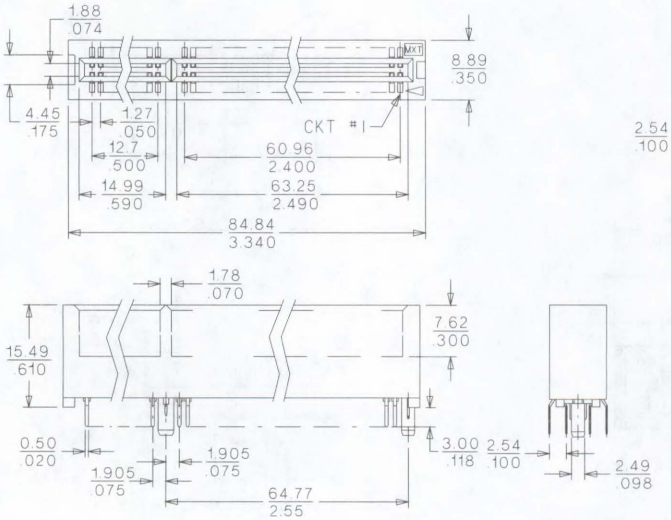

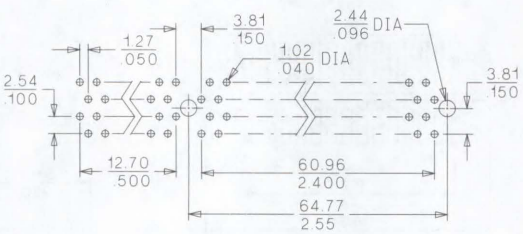

PCB LAYOUT:COMPONENT SIDE
RECOMMENDED PCB THICKNESS: 1.60 (.063)

ORDERING INFORMATION AND DIMENSIONS

Circuits	Order No.	Plating
120	89177-60X0	Gold Flash
	89177-60X1	10μ" Gold
	89177-60X2	15μ" Gold
	89177-60X3	30μ" Gold
	89177-60X4	20μ" Gold
	89177-60X5	40μ" Palladium Nickel

Note: Replace X with number if Peg and Color Option 0 to 3

Peg and Color Option	Description
0	Standard; Brown, With one end cut
1	Standard; White, With one end cut
2	Standard; Brown, With two ends cut
3	Standard; White, With two ends cut

1.27mm (.050") Pitch Compact PCI Slot Board-to-Board Edge Card Connector

89177

184 Circuit, Vertical Double-Sided, Dual Read-Out

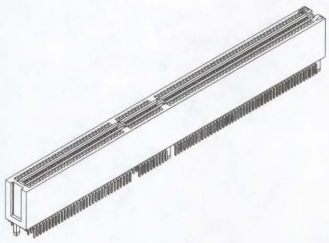

FEATURES AND SPECIFICATIONS

Features and Benefits

- Compatible with 64-bit PCI card
- Optional for 3.3 or 5.0V card configuration
- Provides low card insertion force
- Surface Mount Compatible
- Locating pegs for PCB retention

Reference Information

Product Specification: PS-89177
Packaging: Box
Use With: 64-bit PCI card
Designed In: Millimeters

Electrical

Voltage: 500V AC
Current: 1.0A max.
Contact Resistance: 30mΩ max.
Dielectric Withstanding Voltage: 500V AC
Insulation Resistance: 1,000 MΩ min.

Mechanical

Contact Retention to Housing: 2.94N (0.66 lb) min.
Insertion Force to PCB: 2.254N (0.511 lb) min.
Withdrawal Force: 0.254N (0.057 lb) min.
Mating Force: 117.6N (26.24 lb) max.
Unmating Force: 1.0N (0.224 lb) min.
Durability: 50 cycles max.

Physical

Housing: Brown glass-filled PPS, UL 94V-0
Contact: Phosphor Bronze
Plating: Contact Area—Gold over Tin
Terminal—Nickel
Operating Temperature: -55 to +105˚C

CATALOG DRAWING (FOR REFERENCE ONLY)

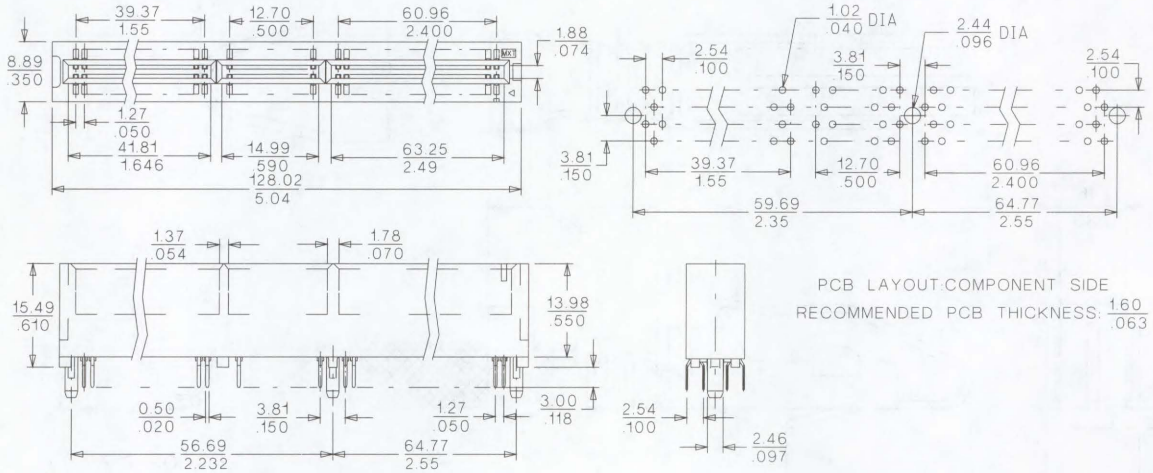

ORDERING INFORMATION AND DIMENSIONS

Circuits	Order No.	Plating
184	89177-92X0	Gold Flash
	89177-92X1	10µ" Gold
	89177-92X2	15µ" Gold
	89177-92X3	30µ" Gold
	89177-92X4	20µ" Gold
	89177-92X5	40µ" Palladium Nickel

Note: Replace X with number if Peg and Color Option 0 to 6

Peg and Color Option	Description
0	Standard; Brown, 5V, Plastic Peg
1	Standard; White, 5V, Plastic Peg
2	Standard; Brown, 3V, Plastic Peg
3	Standard; White, 3V, Plastic Peg
4	Standard; Red, 3V, Plastic Peg
5	Standard; White, 5V, Metal Peg
6	Standard; White, 3V, Metal Peg

3.96mm (.156") Pitch Double-Sided Edge KK® Connector Terminals

4366/4573/4574

PC Crimp and Solder Eyelet

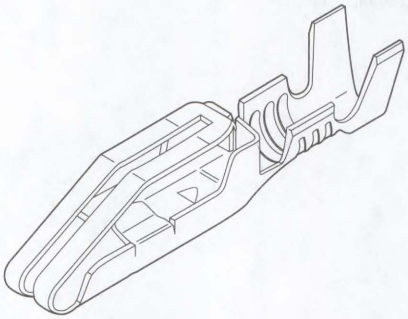

FEATURES AND SPECIFICATIONS

Features and Benefits

- Solder loop version available
- Anti-fishhooking feature prevents terminals from snagging
- Wire barrier prevents stripped wire from entering the contact area
- Coined outside edges prevent excess scoring of the solder pad surfaces
- Patented bifurcated contact area
- Anti-overstress feature

Reference Information

Packaging: Bag or reel
Use With: 4338
Designed In: Inches

Electrical

Voltage: 250V
Current: 5.0A
Contact Resistance: 20mΩ max.
Dielectric Withstanding Voltage: 1500V
Insulation Resistance: 50,000 MΩ min.

Mechanical

Contact Retention to Housing: 8 lb min.
Wire Pull-Out Force: 20 lb for 18 AWG (less for smaller wire)

Physical

Contact: Brass
Plating: See Table
Operating Temperature: 0 to +75°C

CATALOG DRAWING (FOR REFERENCE ONLY)

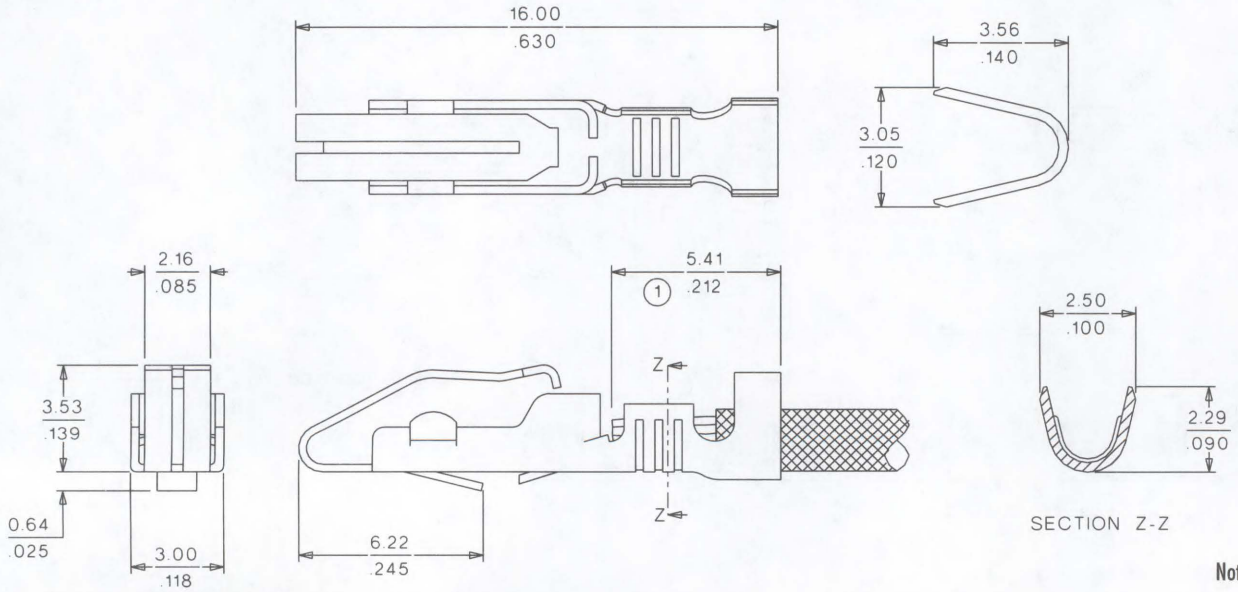

Note: 4366 shown

ORDERING INFORMATION AND DIMENSIONS

Crimp Wire Size	Maximum Insulation Diameter	Engineering No.	Order No.		Plating
			Reel Form	Bag Form	
18-20	2.79 (.110)	4366	• 08-03-0303	• 08-03-0304	Tin
		4366*	• 08-05-0301	• 08-05-0302	Gold
22-26	1.65 (.065)	4573	• 08-03-0305	• 08-03-0306	Tin
		4573*	• 08-05-0303	• 08-05-0304	Gold
PC Tail Solder Loop		4574†	08-01-0201	• 08-01-0202	Tin

• US Standard Product, available through Molex franchised distributors
* 0.00038mm (.000015") min. selective Gold plating over overall Nickel plate
† Tab loop will accommodate a maximum of two 16 AWG solid wires or two 18 AWG stranded wires
For optimum crimp condition, stranded, prefused or Tin-coated wires are recommended

3.96mm (.156") Pitch KK® Double-Sided Edge Connector Housing

4338

Crimp Housing

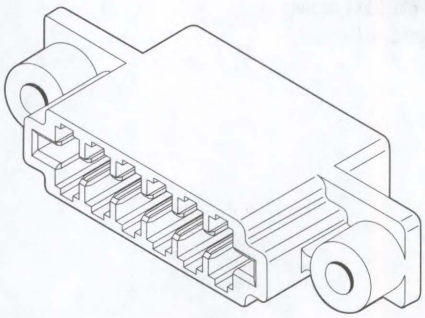

FEATURES AND SPECIFICATIONS

Features and Benefits

- Optional mounting flanges
- Optional polarizing keys
- Housing accommodates terminals for 18 to 30 AWG

Reference Information

Packaging: Bag
UL File No.: E29179
CSA File No.: LR19980
Use With: 4366, 4573 and 4574 terminals
Designed In: Inches

Electrical

Voltage: 250V
Current: 5.0A
Contact Resistance: 20mΩ max.
Dielectric Withstanding Voltage: 1500V AC
Insulation Resistance: 50,000 MΩ min.

Physical

Housing: Polyester, UL 94V-0
Operating Temperature: 0 to +75°C
Recommended PCB Thickness: 1.57mm (.062")

CATALOG DRAWING (FOR REFERENCE ONLY)

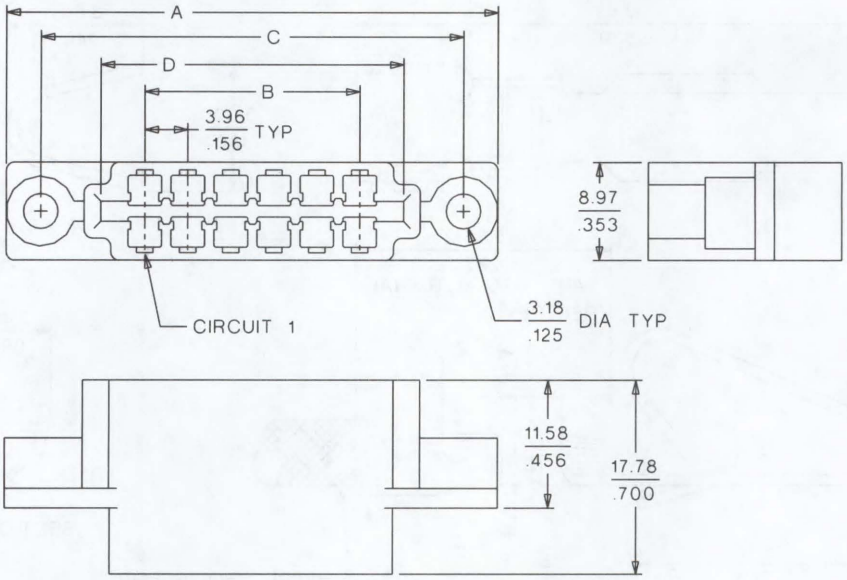

ORDERING INFORMATION AND DIMENSIONS

Dual Circuits	Order No.		Dimension			
	With Mounting Flange	Without Mounting Flange	A	B	C	D
6	• 09-50-6065	09-50-5065	45.24 (1.781)	19.81 (.780)	38.89 (1.531)	28.07 (1.105)
8	• 09-50-6085	09-50-5085	51.23 (2.017)	27.74 (1.092)	44.88 (1.767)	35.94 (1.415)
10	• 09-50-6105	09-50-5105	61.11 (2.406)	35.66 (1.404)	54.76 (2.156)	43.92 (1.729)
12	• 09-50-6125	09-50-5125	68.96 (2.715)	43.59 (1.716)	62.61 (2.465)	51.84 (2.041)
15	• 09-50-6155	09-50-5155	80.98 (3.188)	55.47 (2.184)	74.63 (2.938)	63.75 (2.510)
18	• 09-50-6185	09-50-5185	92.86 (3.656)	67.36 (2.652)	86.51 (3.406)	75.06 (2.955)
22	• 09-50-6225	09-50-5225	108.94 (4.289)	83.21 (3.276)	102.59 (4.039)	91.69 (3.610)
24	• 09-50-6245	09-50-5245	116.84 (4.600)	91.14 (3.588)	110.49 (4.350)	99.62 (3.922)
25	• 09-50-6255	09-50-5255	120.73 (4.753)	95.10 (3.744)	114.38 (4.503)	103.58 (4.078)
28	• 09-50-6285	09-50-5285	132.56 (5.219)	106.98 (4.212)	126.21 (4.969)	115.54 (4.549)

Optional Polarizing Keys	Order No.
6532 intercontact	15-04-0233
43072 on contact	15-05-1004

• US Standard Product, available through Molex franchised distributors

3.96mm (.156") Pitch KK®
Single-Sided Terminals

2478/2578/2878

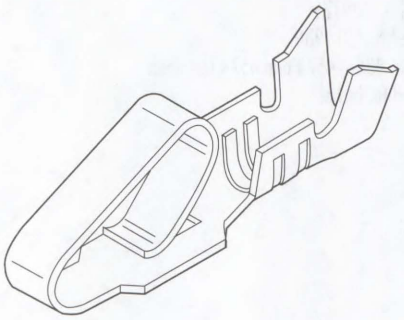

FEATURES AND SPECIFICATIONS

Features and Benefits

- Crimp wire sizes 18 to 26 AWG
- Patented double cantilever design
- Complete line of terminal crimping equipment available
- 2878 bifurcated terminal offers 2 points of contact for increased reliability

Reference Information

Packaging: Bag or reel
UL File No.: E29179
CSA File No.: LR19980
Use With: 2574 housing
Designed In: Inches

Electrical

Voltage: 250V
Current: Use table

AWG	18	20	22	24	26
Phosphor Bronze (Amperes max.)	7.00	6.25	5.50	5.00	4.50
Brass (Amperes max.)	5.00	4.75	4.50	4.25	4.00

Contact Resistance: 20mΩ max.
Dielectric Withstanding Voltage: 1500V
Insulation Resistance: 50,000 MΩ min.

Mechanical

Contact Insertion Force: 1.36kg (3 lb) max.
Contact Retention to Housing: 3.63kg (8 lb) min. when pulled in an axial direction
Normal Force: 0.75kg (1.65 lb)

Physical

Contact: Brass or Phosphor Bronze
Plating: See Table
Operating Temperature: 0 to +50°C

CATALOG DRAWING (FOR REFERENCE ONLY)

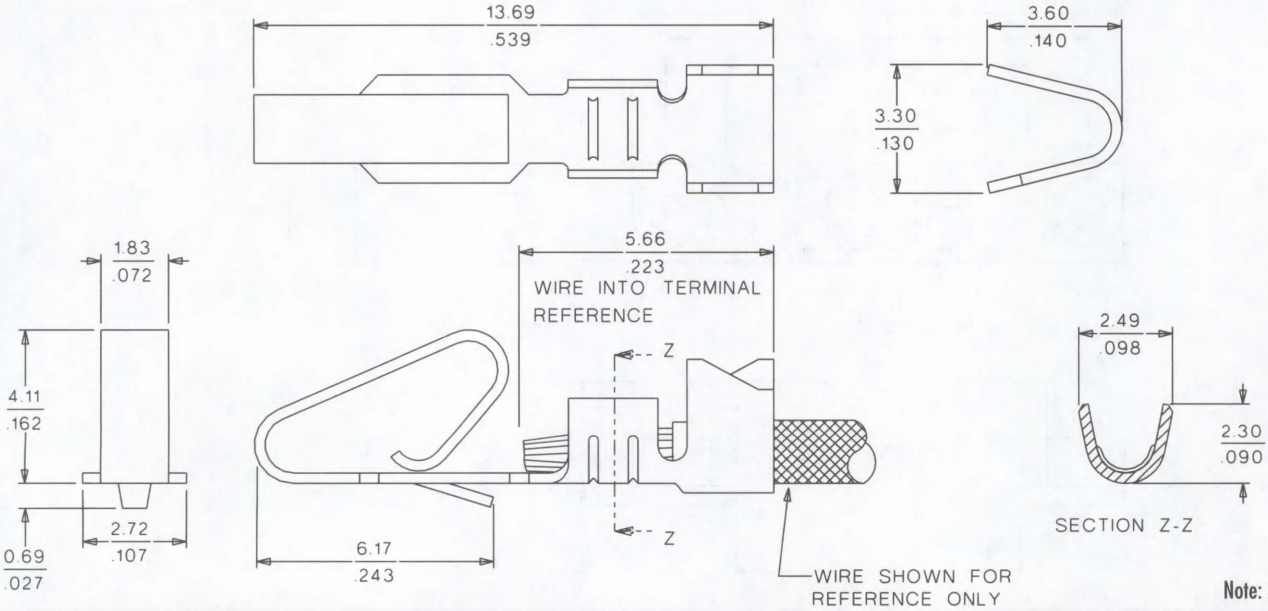

Note: 2478 shown

ORDERING INFORMATION AND DIMENSIONS

Wire Size	Maximum Insulation Outside Diameter	Series	Material	Tin Plating		Gold Plating No. 1		Gold Plating No. 2	
				Bag	Reel	Bag	Reel	Bag	Reel
18-20	2.79 (.110)	2478	Phosphor Bronze	• 08-52-0072	• 08-52-0071	• 08-58-0122	• 08-58-0121	• 08-65-0115	• 08-65-0114
18-20	2.79 (.110)	2478	Brass	08-50-0106	08-50-0105	08-56-0106	08-56-0105	08-55-0104	08-55-0103
18-20	2.79 (.110)	2878	Phosphor Bronze	• 08-52-0127	• 08-52-0126	• 08-58-0128	• 08-58-0127	• 08-65-0119	• 08-65-0118
18-20	2.79 (.110)	2878	Brass	08-50-0116	08-50-0115				
22-26	1.65 (.065)	2578	Phosphor Bronze	• 08-50-0134	• 08-50-0133	• 08-58-0126	• 08-58-0125	• 08-65-0117	• 08-65-0116
22-26	1.65 (.065)	2578	Brass	08-50-0108	08-50-0107	08-56-0108	08-56-0107	08-55-0106	08-55-0105

• US Standard Product, available through Molex franchised distributors
Recommended wire range assumes stranded wire
Plating No. 1: 20μ" min. Gold in contact area with a flash overall
Plating No. 2: 15μ" min. Gold in contact area only

3.96mm (.156") Pitch KK® Single-Sided Edge Connector Housing

2574

Polarized Edge Connector Housing for Crimp Terminals

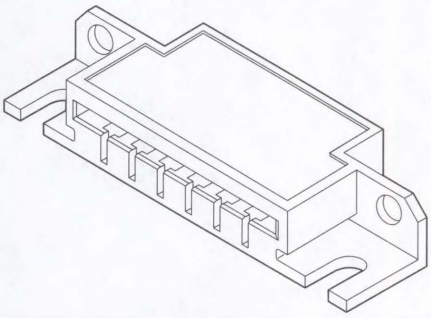

FEATURES AND SPECIFICATIONS

Features and Benefits

- Optional mounting flanges
- Polarization provided by structural ribs
- Uses optional bifurcated terminals
- IDC version (7241 product)
- Housing accommodates terminals for 18 to 26 AWG

Reference Information

Packaging: Bag
UL File No.: E29179
Use With: 2478, 2578 or bifurcated 2878 terminals
Designed In: Inches

Electrical

Voltage: 250V
Current: 5.0A
Contact Resistance: 20mΩ max.
Dielectric Withstanding Voltage: 1500V AC
Insulation Resistance: 50,000 MΩ min.

Physical

Housing: Nylon, UL 94V-2
Operating Temperature: 0 to +75°C
Recommended PCB Thickness: 1.57mm (.062")

CATALOG DRAWING (FOR REFERENCE ONLY)

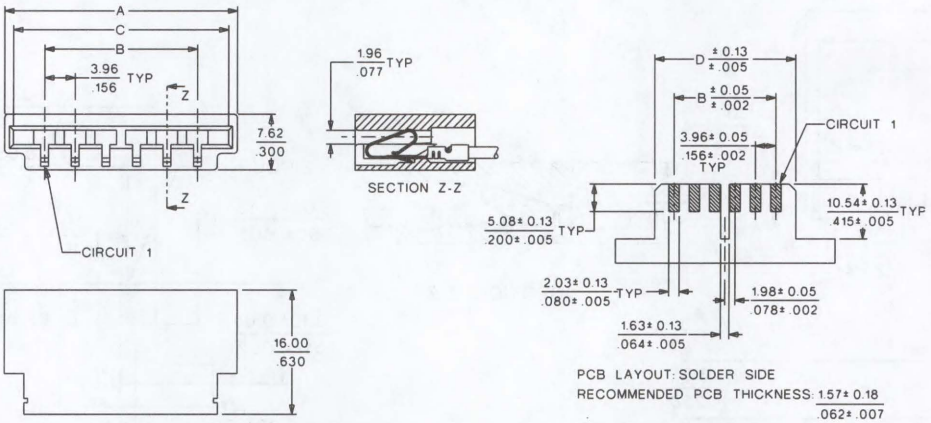

ORDERING INFORMATION

Circuits	Order No.		Dimension				Center Ribs Between Circuits
	Without Flange	With Flange	A	B	C	D	
3	09-01-6031	09-01-7031	20.29 (.799)	7.92 (.312)	16.10 (.634)	15.60 (.614)	
4	09-01-6041		22.35 (.880)	11.89 (.468)	20.07 (.790)	19.56 (.770)	
5	09-01-6051	09-01-7051	26.31 (1.036)	15.85 (.624)	24.03 (.946)	23.52 (.926)	
6		09-01-7064	30.28 (1.192)	19.81 (.780)	27.99 (1.102)	27.48 (1.082)	
6	09-01-6061	09-01-7061	30.28 (1.192)	19.81 (.780)	27.99 (1.102)	27.48 (1.082)	2 and 3
7	09-01-6071	09-01-7071	34.19 (1.346)	23.77 (.936)	31.90 (1.256)	31.39 (1.236)	3 and 4
8		09-01-7081	38.15 (1.502)	27.74 (1.092)	35.86 (1.412)	35.36 (1.392)	
8	09-01-6085		38.15 (1.502)	27.74 (1.092)	35.86 (1.412)	35.36 (1.392)	2 and 3
8	09-01-6086		38.15 (1.502)	27.74 (1.092)	35.86 (1.412)	35.36 (1.392)	3 and 4
8	09-01-6083	09-01-7083	38.15 (1.502)	27.74 (1.092)	35.86 (1.412)	35.36 (1.392)	5 and 6
9	09-01-6095	09-01-7095	42.09 (1.657)	31.70 (1.248)	39.83 (1.568)	39.32 (1.548)	2 and 3
9	09-01-6094	09-01-7094	42.09 (1.657)	31.70 (1.248)	39.83 (1.568)	39.32 (1.548)	5 and 6
9	09-01-6091	09-01-7091	42.09 (1.657)	31.70 (1.248)	39.83 (1.568)	39.32 (1.548)	3 and 4 / 5 and 6
10	09-01-6101	09-01-7101	46.08 (1.814)	35.66 (1.404)	43.79 (1.724)	43.28 (1.704)	4 and 5 / 7 and 8
12	09-01-6121		54.00 (2.126)	43.59 (1.716)	51.71 (2.036)	51.21 (2.016)	5 and 6 / 8 and 9
15	09-01-6151	09-01-7151	65.89 (2.594)	55.47 (2.184)	63.60 (2.504)	63.09 (2.484)	4 and 5 / 7 and 8 / 11 and 12
16	09-01-6161	09-01-7161	69.85 (2.750)	59.44 (2.340)	67.56 (2.660)	67.06 (2.640)	4 and 5 / 7 and 8 / 11 and 12
17	09-01-6171	09-01-7171	73.81 (2.906)	63.40 (2.496)	71.53 (2.816)	71.02 (2.796)	5 and 6 / 10 and 11 / 14 and 15
18	09-01-6181	09-01-7181	77.77 (3.062)	67.36 (2.652)	75.49 (2.972)	74.98 (2.952)	5 and 6 / 10 and 11
19	09-01-6191	09-01-7191	81.74 (3.218)	71.32 (2.808)	79.45 (3.128)	78.94 (3.108)	4 and 5 / 7 and 8 / 11 and 12 / 15 and 16
21	09-01-6211	09-01-7211	89.66 (3.530)	79.25 (3.120)	87.38 (3.440)	86.87 (3.420)	5 and 6 / 10 and 11 / 15 and 16
22	09-01-6224	09-01-7224	93.62 (3.686)	83.21 (3.276)	91.34 (3.596)	90.83 (3.576)	5 and 6 / 11 and 12 / 16 and 17
24	09-01-6241	09-01-7241	101.55 (3.998)	91.14 (3.588)	99.26 (3.908)	98.76 (3.888)	4 and 5 / 8 and 9 / 12 and 13 /16 and 17 / 20 and 21

Note: Use KK® terminal 2578 for 22 to 26 AWG wire, or 2478 and 2878 (bifurcated) for 18 to 24 AWG with 2.79mm (.110") diameter maximum insulation

3.96mm (.156") Pitch KK® Single-Sided Edge Connector Housing

6422

Polarized Edge Connector Housing with Positive Lock

FEATURES AND SPECIFICATIONS

Features and Benefits

- Polarization provided by structural ribs
- Optional bifurcated terminals
- Optional probe hole
- Housing accommodates terminals for 18 to 26 AWG

Reference Information

Packaging: Bag
UL File No.: E29179
Use With: 2478, 2578 or bifurcated 2878 terminals
Designed In: Inches

Electrical

Voltage: 250V
Current: 5.0A
Contact Resistance: 20mΩ max.
Dielectric Withstanding Voltage: 1500V
Insulation Resistance: 50 MΩ min.

Physical

Housing: Nylon, UL 94V-2
Operating Temperature: 0 to +75°C
Recommended PCB Thickness: 1.57mm (.062")

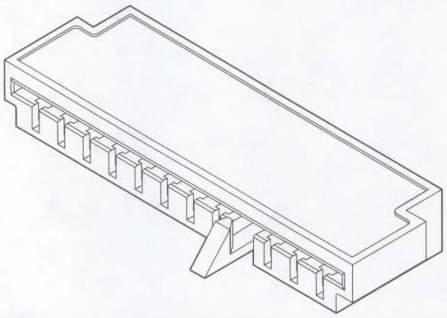

CATALOG DRAWING (FOR REFERENCE ONLY)

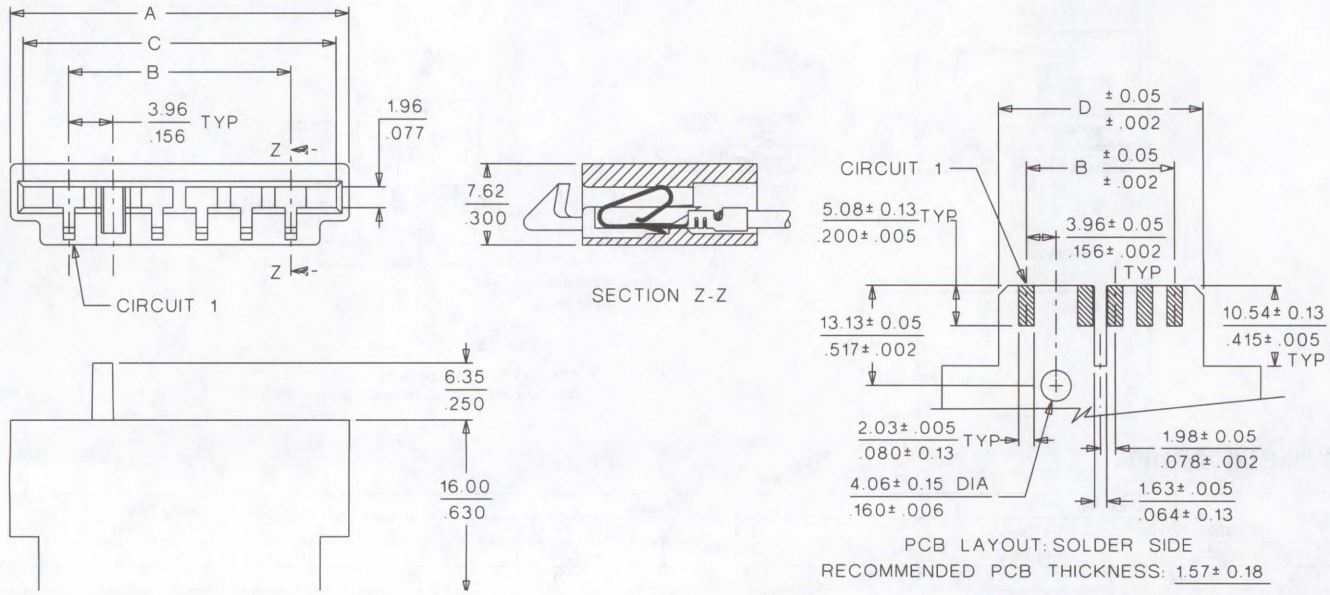

ORDERING INFORMATION

Circuits*	Order No.		Dimension				Rib Located Between Circuits	Hook Located Between Circuits
	With Probe Hole	Without Probe Hole	A	B	C	D		
3		09-01-1038	20.35 (.801)	7.92 (.312)	16.05 (.632)	15.70 (.618)	None	1 and 3
5	09-01-1056	09-01-1058	26.26 (1.034)	15.85 (.624)	23.98 (.944)	23.42 (.922)	None	1 and 3
6		09-01-1068	30.23 (1.190)	19.81 (.780)	27.92 (1.100)	27.38 (1.078)	None	1 and 3
9	09-01-1096	09-01-1098	42.11 (1.658)	31.70 (1.248)	39.83 (1.568)	39.22 (1.544)	3 and 4 / 5 and 6	3 and 5
10		09-01-1108	46.08 (1.814)	35.66 (1.404)	43.79 (1.724)	43.18 (1.700)	4 and 5 / 7 and 8	8 and 10
12		09-01-1128	54.00 (2.126)	43.59 (1.716)	51.71 (2.036)	51.05 (2.010)	6 and 7	8 and 10
15	09-01-1156		65.89 (2.594)	55.47 (2.184)	63.60 (2.504)	62.84 (2.474)	None	8 and 10

* 1 circuit lost to provide locking hook; i.e., 3 circuit accepts 2 terminals only

FEATURES AND SPECIFICATIONS

Manual Bench Tool Double-Sided for Modular IC Socket System

Features

- Forms both sides of IC chip to carrier in 1 cycle
- Provisions for static grounding
- Interchangeable inserts for 24, 28 and 32 circuit carriers
- Compact and lightweight
- Minimal operator effort required

Specifications

Size: Width—114mm (4.5")
Depth—330mm (13")
Height—165mm (6.5")
Weight: 2.63kg (5 lb)
Rate: Up to 400 assemblies per hour, dependent on operator speed and application. Annual capacity of 800,000 assemblies.

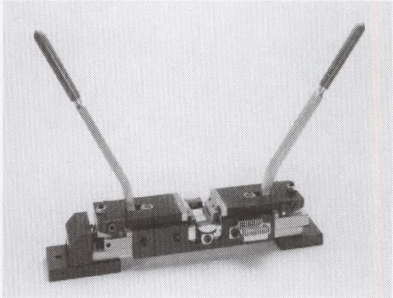

ORDERING INFORMATION

IC Size	Order No.		
	Base Machine with Tool Kit	Tool Kit Only	Base Machine Only
24 Circuit	11-20-0976	11-20-0662	11-20-0647
28 Circuit	11-20-0977	11-20-0663	11-20-0647
32 Circuit	11-20-0978	11-20-0951	11-20-0647
40 Circuit	11-20-1353	11-20-0664	11-20-0647

Customer must supply 12 I.C.'s with order to assure proper operation

ORDERING INFORMATION

Description	Order No.	Terminal No.
Terminal Cutter	11-20-1219	50002, 50020

Semi-Automatic Terminal Cutter for 50020 and 50002 Terminals