

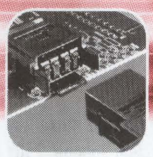

0.40 to 1.60mm (.016 to .063") Pitch PCB and Wire Connectors

0.40mm (.016") Pitch Board-to-Board Receptacle

54518

SMT, Dual Row Vertical Stacking

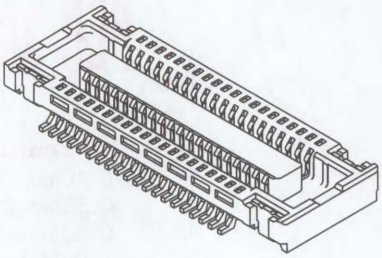

FEATURES AND SPECIFICATIONS

Features and Benefits

- Stacking height: 1.50mm (.059")
- Sizes 60, 80 and 100 circuits
- Friction lock provides secure mating retention
- Four metal solder tabs provide PCB hold-down and strain relief for solder tails
- Anti-flux design
- Durable blade-on-beam contact interface

Reference Information

Product Specification: PS-54518-010
Packaging: Embossed tape
Mates With: 55372
Designed In: Millimeters

Electrical

Voltage: 50V
Current: 0.3A
Contact Resistance: 40mΩ max.
Dielectric Withstanding Voltage: 250V AC/1 min.
Insulation Resistance: 100 MΩ min.

Physical

Housing: Black glass-filled LCP, UL 94V-0
Contact: Phosphor Bronze
Plating: Contact Area—10μ" min. Gold
Solder Tail Area—16μ" min. Gold
Underplating—Nickel
Solder Tabs: Phosphor Bronze, Tin/Lead over Copper
Operating Temperature: -25 to +85°C

CATALOG DRAWING (FOR REFERENCE ONLY)

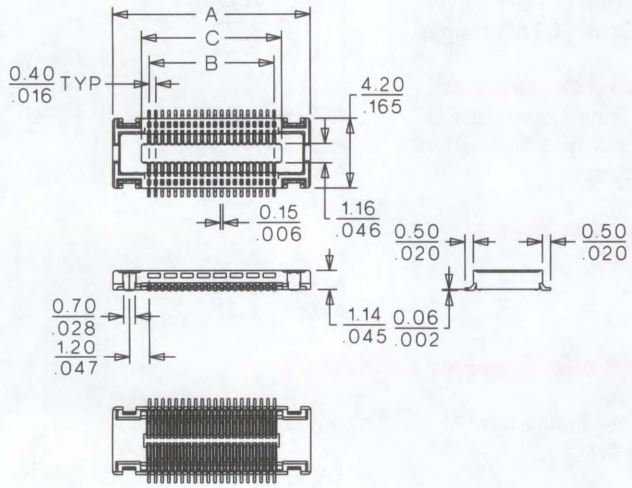

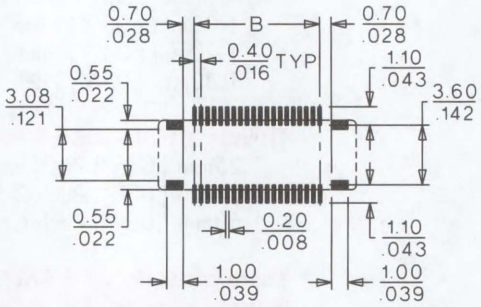

PCB LAYOUT : COMPONENT SIDE

ORDERING INFORMATION AND DIMENSIONS

Circuits	Order No.	Dimension			Carrier Tape Width
		A	B	C	
60	54518-0602	16.00 (.630)	11.60 (.457)	12.52 (.493)	32.00 (1.260)
80	54518-0802	20.00 (.787)	15.60 (.614)	16.52 (.650)	32.00 (1.260)
100	54518-1002	24.00 (.945)	19.60 (.772)	20.52 (.808)	44.00 (1.732)

0.40mm (.016") Pitch Board-to-Board Plug

55372

SMT, Dual Row Vertical Stacking

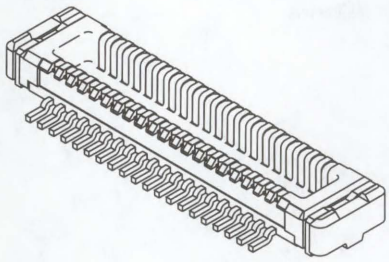

FEATURES AND SPECIFICATIONS

Features and Benefits

- Stacking height: 1.50mm (.059")
- Sizes 60, 80 and 100 circuits
- Friction lock provides secure mating retention
- SMT tail design provides strong solder joints and visible inspection
- Four metal solder tabs provide PCB hold-down and strain relief for solder tails
- Durable blade-on-beam contact interface

Reference Information

Product Specification: PS-54518-010
Packaging: Embossed tape
Mates With: 54518
Designed In: Millimeters

Mating Dimensions
55372/54518
H=1.50mm (.059") W=4.20mm (.165")

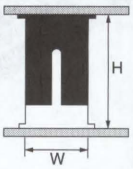

Electrical

Voltage: 50V
Current: 0.3A
Contact Resistance: 40mΩ max.
Dielectric Withstanding Voltage: 250V AC/1 min.
Insulation Resistance: 100 MΩ min.

Physical

Housing: Black glass-filled LCP, UL 94V-0
Contact: Brass
Plating: Contact Area—10μ" min. Gold
Solder Tail Area—16μ" min. Gold
Underplating—Nickel
Solder Tabs: Phosphor Bronze, Tin/Lead over Copper
Operating Temperature: -25 to +85°C

CATALOG DRAWING (FOR REFERENCE ONLY)

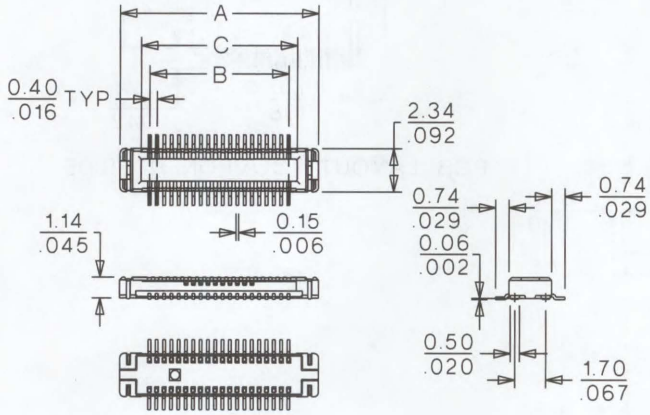

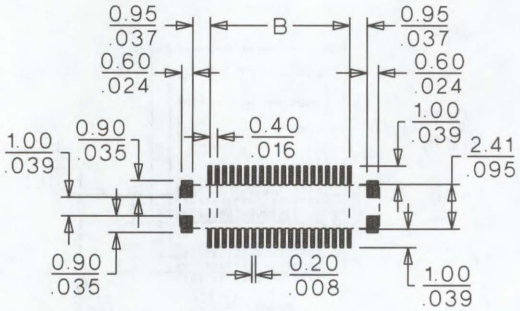

PCB LAYOUT : COMPONENT SIDE

ORDERING INFORMATION AND DIMENSIONS

Circuits	Order No.	Dimension			Carrier Tape Width
		A	B	C	
60	55372-0608	14.85 (.585)	11.60 (.457)	12.54 (.494)	32.00 (1.260)
80	55372-0808	18.85 (.742)	15.60 (.614)	16.54 (.651)	32.00 (1.260)
100	55372-1008	22.85 (.900)	19.60 (.772)	20.54 (.809)	44.00 (1.732)

0.40mm (.016") Pitch Board-to-Board Receptacle

54796

SMT, Dual Row Vertical Stacking

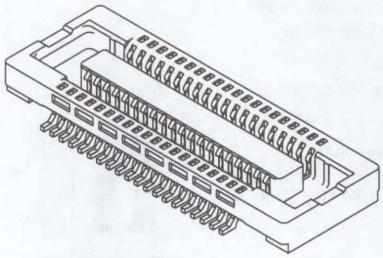

FEATURES AND SPECIFICATIONS

Features and Benefits

- Stacking height: 1.50mm (.059")
- Sizes 80 circuits
- Friction lock provides secure mating retention
- Anti-flux design
- Durable blade-on-beam contact interface

Reference Information

Product Specification: PS-54796-005
Packaging: Embossed tape
Mates With: 55622
Designed In: Millimeters

Electrical

Voltage: 50V
Current: 0.3A
Contact Resistance: 40mΩ max.
Dielectric Withstanding Voltage: 250V AC/1 min.
Insulation Resistance: 100 MΩ min.

Physical

Housing: Black glass-filled LCP, UL 94V-0
Contact: Phosphor Bronze
Plating: Contact Area—10μ" min. Gold
Solder Tail Area—16μ" min. Gold
Underplating—Nickel
Operating Temperature: -25 to +85°C

CATALOG DRAWING (FOR REFERENCE ONLY)

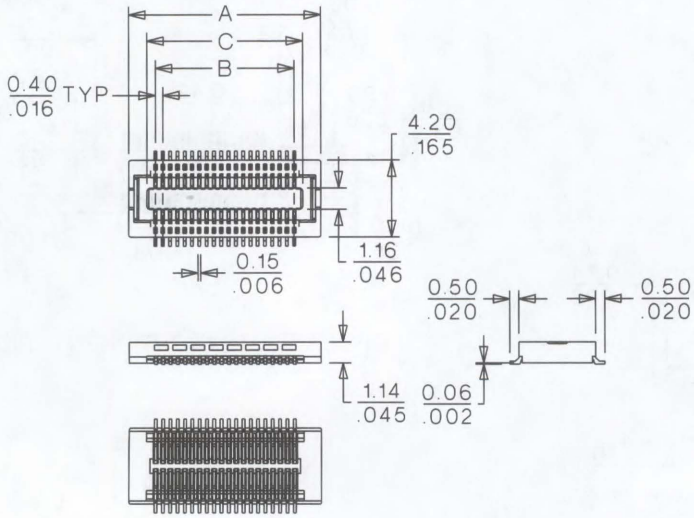

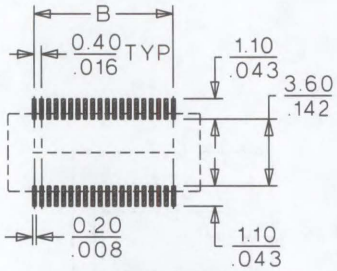

PCB LAYOUT : COMPONENT SIDE

ORDERING INFORMATION AND DIMENSIONS

Circuits	Order No.	Dimension			Carrier Tape Width
		A	B	C	
80	54796-0808	18.50 (.728)	15.60 (.614)	16.52 (.650)	32.00 (1.260)

0.40mm (.016") Pitch Board-to-Board Plug

55622

SMT, Dual Row Vertical Stacking

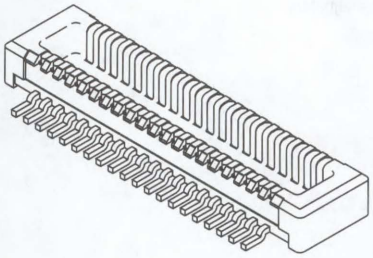

FEATURES AND SPECIFICATIONS

Features and Benefits

- Stacking height: 1.50mm (.059")
- Sizes 80 circuits
- Friction lock provides secure mating retention
- SMT tail design provides strong solder joints and visible inspection
- Anti-flux design
- Durable blade-on-beam contact interface

Reference Information

Product Specification: PS-54796-005
Packaging: Embossed tape
Mates With: 54796
Designed In: Millimeters

Mating Dimensions
55622/54796
H=1.50mm (.059") W=4.20mm (.165")

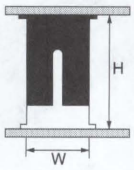

Electrical

Voltage: 50V
Current: 0.3A
Contact Resistance: 40mΩ max.
Dielectric Withstanding Voltage: 250V AC/1 min.
Insulation Resistance: 100 MΩ min.

Physical

Housing: Black glass-filled LCP, UL 94V-0
Contact: Brass
Plating: Contact Area—10μ" min. Gold
Solder Tail Area—16μ" min. Gold
Underplating—Nickel
Operating Temperature: -25 to +85°C

CATALOG DRAWING (FOR REFERENCE ONLY)

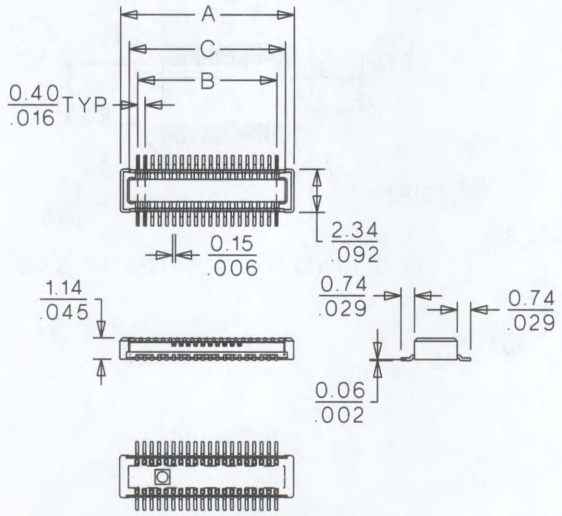

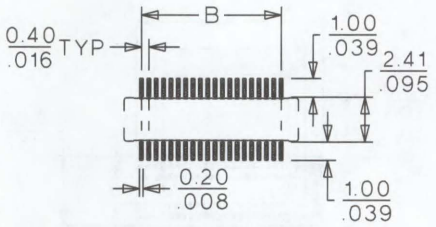

PCB LAYOUT : COMPONENT SIDE

ORDERING INFORMATION AND DIMENSIONS

Circuits	Order No.	Dimension			Carrier Tape Width
		A	B	C	
80	55622-0808	17.49 (.689)	15.60 (.614)	16.54 (.651)	32.00 (1.260)

0.40mm (.016") Pitch Board-to-Board Receptacle

54477

SMT, Dual Row Vertical Stacking

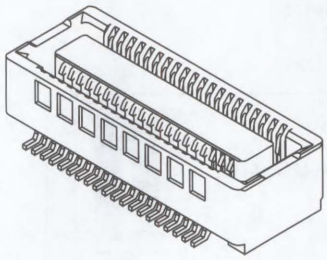

FEATURES AND SPECIFICATIONS

Features and Benefits

- Stacking height: 4.00mm (.157")
- Sizes 80 and 120 circuits
- Polarizing pegs assist placement
- Anti-flux design
- Durable blade-on-beam contact interface

Reference Information

Product Specification: PS-54477-008
Packaging: Embossed tape
Mates With: 55339
Designed In: Millimeters

Electrical

Voltage: 30V
Current: 0.3A
Contact Resistance: 60mΩ max.
Dielectric Withstanding Voltage: 250V AC/1 min.
Insulation Resistance: 100 MΩ min.

Physical

Housing: Brown glass-filled LCP, UL 94V-0
Contact: Phosphor Bronze
Plating: Contact Area—10μ" min. Gold
Solder Tail Area—16μ" min. Gold
Underplating—Nickel
Operating Temperature: -25 to +105°C

CATALOG DRAWING (FOR REFERENCE ONLY)

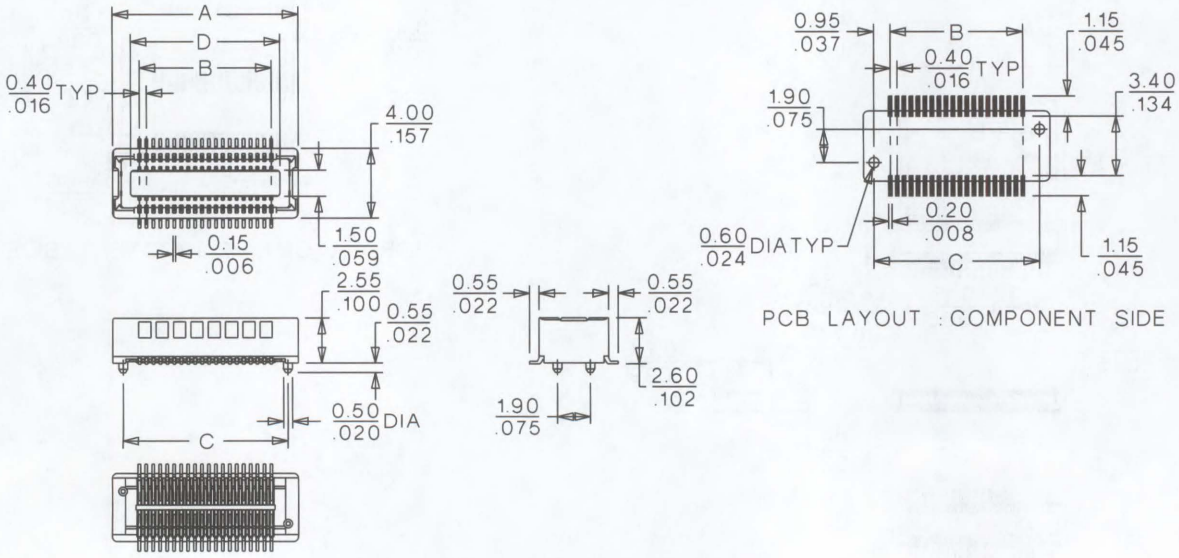

ORDERING INFORMATION AND DIMENSIONS

Circuits	Order No.	Dimension				Carrier Tape Width
		A	B	C	D	
80	54477-0808	18.70 (.736)	15.60 (.614)	17.50 (.689)	16.60 (.654)	32.00 (1.260)
120	54477-1208	26.70 (1.051)	23.60 (.929)	25.50 (1.004)	24.60 (.969)	44.00 (1.732)

0.40mm (.016") Pitch Board-to-Board Plug

55339

SMT, Dual Row Vertical Stacking

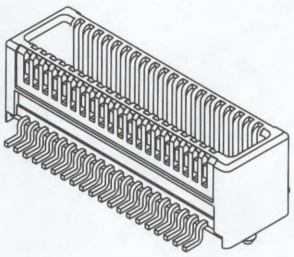

FEATURES AND SPECIFICATIONS

Features and Benefits

- Stacking height: 4.00mm (.157")
- Sizes 80 and 120 circuits
- SMT tail design provides strong solder joints and visible inspection
- Positioning pegs assist placement

Reference Information

Product Specification: PS-54477-008
Packaging: Embossed tape
Mates With: 54477
Designed In: Millimeters

Mating Dimensions
55339/54477
H=4.00mm (.157") W=4.00mm (.157")

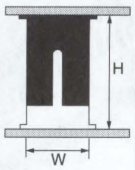

Electrical

Voltage: 30V
Current: 0.3A
Contact Resistance: 60mΩ max.
Dielectric Withstanding Voltage: 250V AC/1 min.
Insulation Resistance: 100 MΩ min.

Physical

Housing: Brown glass-filled LCP, UL 94V-0
Contact: Phosphor Bronze
Plating: Contact Area—10μ" min. Gold
Solder Tail Area—16μ" min. Gold
Underplating—Nickel
Operating Temperature: -25 to +105°C

CATALOG DRAWING (FOR REFERENCE ONLY)

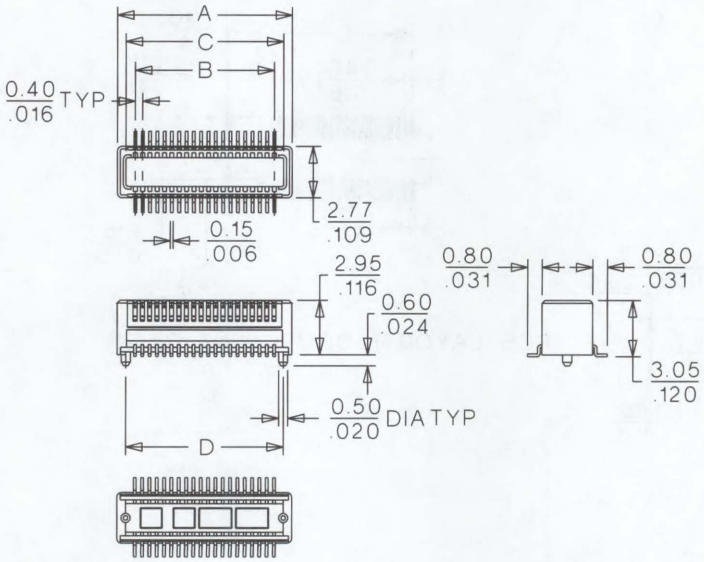

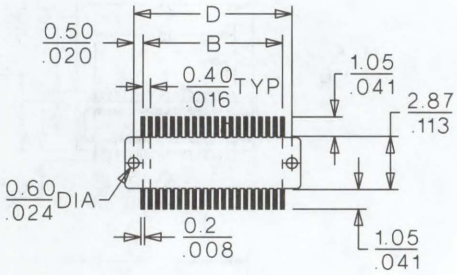

PCB LAYOUT : COMPONENT SIDE

ORDERING INFORMATION AND DIMENSIONS

Circuits	Order No.	Dimension				Carrier Tape Width
		A	B	C	D	
80	55339-0808	17.55 (.691)	15.60 (.614)	16.62 (.654)	16.60 (.654)	32.00 (1.260)
120	55339-1208	25.55 (1.006)	23.60 (.929)	24.62 (.969)	24.60 (.969)	44.00 (1.732)

0.40mm (.016") Pitch Board-to-Board Receptacle

54552

SMT, Dual Row Right Angle Stacking

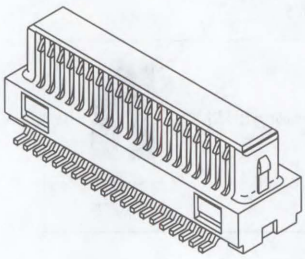

FEATURES AND SPECIFICATIONS

Features and Benefits

- Mated height: 3.20mm (.126")
- Sizes 40 and 80 circuits
- Locking feature for secure mating retention
- Anti-flux design
- Blade-on-beam contact interface

Reference Information

Product Specification: PS-54552-011
Packaging: Embossed tape
Mates With: 55394
Designed In: Millimeters

Electrical

Voltage: 30V
Current: 0.3A
Contact Resistance: 60mΩ max.
Dielectric Withstanding Voltage: 250V AC/1 min.
Insulation Resistance: 100 MΩ min.

Physical

Housing: Brown glass-filled LCP, UL 94V-0
Contact: Phosphor Bronze
Plating: Contact Area—10μ" min. Gold
Solder Tail Area—14μ" min. Gold
Underplating—Nickel
Operating Temperature: -25 to +105°C

CATALOG DRAWING (FOR REFERENCE ONLY)

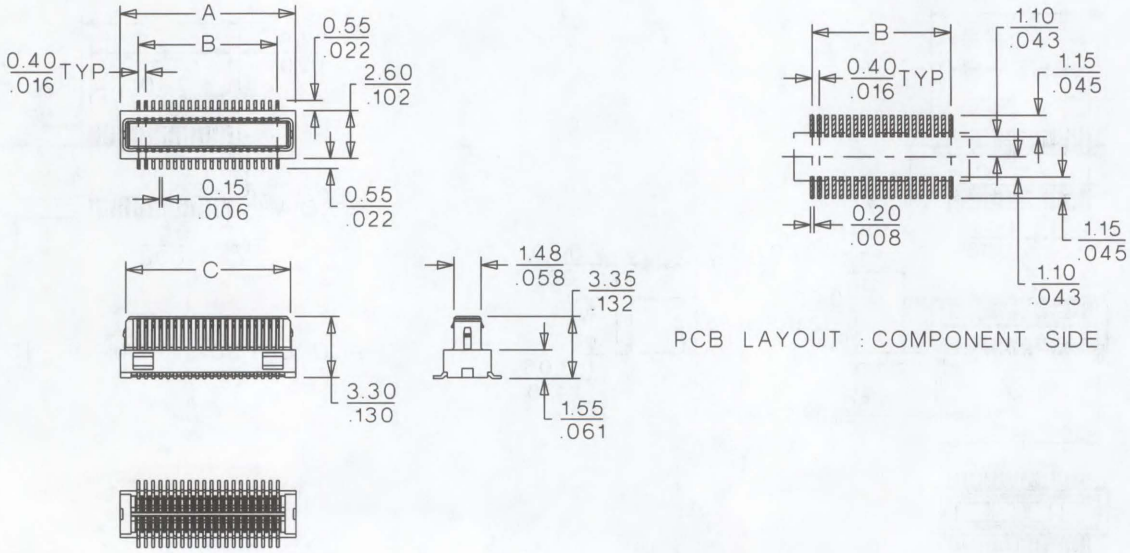

ORDERING INFORMATION AND DIMENSIONS

Circuits	Order No.	Dimension			Carrier Tape Width
		A	B	C	
40	54552-0406	9.60 (.378)	7.60 (.299)	9.00 (.354)	24.00 (.945)
80	54552-0806	17.60 (.693)	15.60 (.614)	17.00 (.669)	32.00 (1.260)

0.40mm (.016") Pitch Board-to-Board Plug

55394

SMT, Dual Row Right Angle

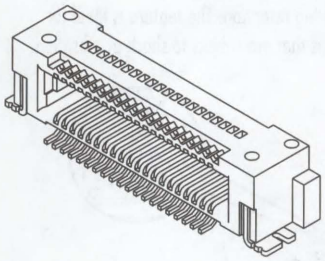

FEATURES AND SPECIFICATIONS

Features and Benefits

- Mated height: 3.20mm (.126")
- Sizes 40 and 80 circuits
- Locking feature for secure mating retention
- SMT tail design provides strong solder joints
- Two wide metal solder tabs provide PCB hold-down and strain relief for solder tails
- Pull-tabs to assist unmating

Reference Information

Product Specification: PS-54552-011
Packaging: Embossed tape
Mates With: 54552
Designed In: Millimeters

Mating Dimensions
55394/54552
H=3.20mm (.126") W=4.25mm (.167")

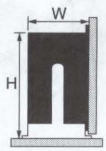

Electrical

Voltage: 30V
Current: 0.3A
Contact Resistance: 60mΩ max.
Dielectric Withstanding Voltage: 250V AC/1 min.
Insulation Resistance: 100 MΩ min.

Physical

Housing: Brown glass-filled LCP, UL 94V-0
Contact: Phosphor Bronze
Plating: Contact Area—10μ" min. Gold
Solder Tail Area—14μ" min. Gold
Underplating—Nickel
Solder Tabs: Phosphor Bronze, Tin/Lead over Copper
Operating Temperature: -25 to +105°C

CATALOG DRAWING (FOR REFERENCE ONLY)

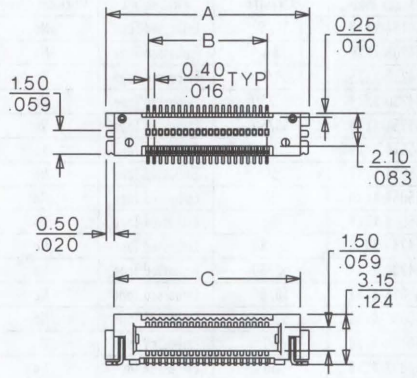

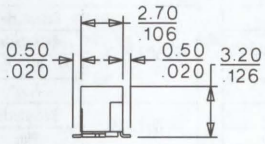

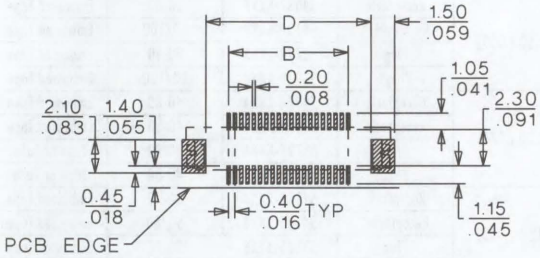

PCB LAYOUT : COMPONENT SIDE

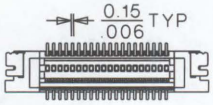

ORDERING INFORMATION AND DIMENSIONS

Circuits	Order No.	Dimension				Carrier Tape Width
		A	B	C	D	
40	55394-0406	13.00 (.512)	7.60 (.299)	11.90 (.469)	10.50 (.413)	24.00 (.945)
80	55394-0806	21.00 (.827)	15.60 (.614)	19.90 (.783)	18.50 (.728)	32.00 (1.260)

0.50mm (.020") Pitch SMT Stacking Board-to-Board Connectors Product Overview

What is a "stacking" connector?

Stacking connectors are parallel board-to-board connectors that offer various "mix-and-match" options within a series to provide a flexible range of vertical stack heights. Molex offers one of the industry's broadest range of Micro SMT Stacking connectors to meet tight packaging requirements for all industries.

Locking feature on 0.50mm SMT Stacking Series

Molex's 0.50mm stacking series includes a unique metal friction lock on our smallest stacking height versions that provides added mating retention. The feature is ideal for portable applications that are subject to shock or vibration.

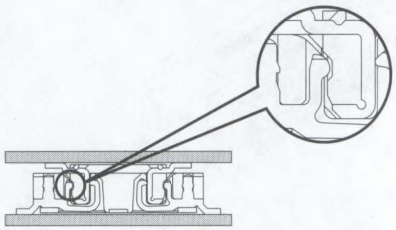

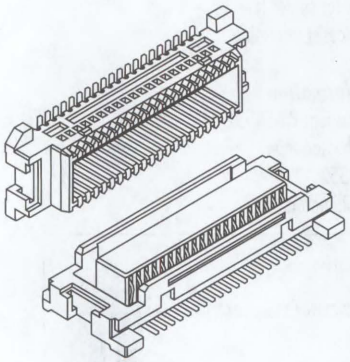

Stacking Height	Mating Types	Order No.	Circuits	Packaging	Vacuum Cover
1.50 (.059)	Receptacle	54037-XXX7	20-80	Embossed Tape	No
	Receptacle*	54137-XXX8	80/100	Embossed Tape	No
	Plug	53794-XXX8	20-80	Embossed Tape	No
	Plug*	53929-XXX8	80/100	Embossed Tape	No
2.00 (.079)	Receptacle	52974-XXX4	40-80	Embossed Tape	Yes
	Receptacle	52974-XXX8	40-80	Embossed Tape	No
	Plug	53729-XXX4	40-80	Tape or Tube	Yes
	Plug	53729-XXX8	40-80	Tape or Tube	No
2.50 (.098)	Receptacle	54102-XXX8	20-70	Embossed Tape	No
	Receptacle*	54150-XXX8	50/80	Embossed Tape	No
	Plug	53885-XXX8	20-70	Embossed Tape	No
	Plug*	53949-XXX8	50/80	Embossed Tape	No
3.00 (.118)	Receptacle	52991-XXX8	20-80	Embossed Tape	No
	Plug	53748-XXX4	20-70	Embossed Tape	Yes
	Plug	53748-XXX8	20-80	Embossed Tape	No
4.00 (.157)	Receptacle	54167-XXX8	20-60	Embossed Tape	No
	Plug	53916-XXX4	20-60	Embossed Tape	Yes
	Plug	53916-XXX8	20-60	Embossed Tape	No

Stacking Height	Mating Types	Order No.	Circuits	Packaging	Vacuum Cover
5.00 (.197)	Receptacle‡	54154-XXX8	30/50	Embossed Tape	No
	Receptacle	54206-XXX9	60	Embossed Tape	No
	Receptacle*†	54230-XXX8	50/80	Embossed Tape	No
	Receptacle*	54230-XXX9	50/80	Embossed Tape	No
	Plug‡	53954-XXX8	30/50	Embossed Tape	No
	Plug	55018-XXX9	60	Embossed Tape	No
	Plug*†	55054-XXX7	50	Embossed Tape	No
	Plug*‡	55054-XXX8	50	Embossed Tape	No
	Plug*	55054-XXX9	50	Embossed Tape	No
5.50 (.217)	Receptacle*†	54230-XXX8	50/80	Embossed Tape	No
	Receptacle*	54230-XXX9	50/80	Embossed Tape	No
	Plug*‡	55055-XXX8	50/80	Embossed Tape	No
	Plug*	55055-XXX8	50/80	Embossed Tape	No
6.00 (.236)	Receptacle†	54124-XXX8	60	Embossed Tape	No
	Plug	53887-XXX8	60	Embossed Tape	No

* Solder tab version

† 1 peg

‡ 2 pegs

Note: 2.50, 5.00 and 5.50mm stacking height versions are new and not shown in this catalog. Contact Molex for details.

0.50mm STACKING HEIGHT OVERVIEW

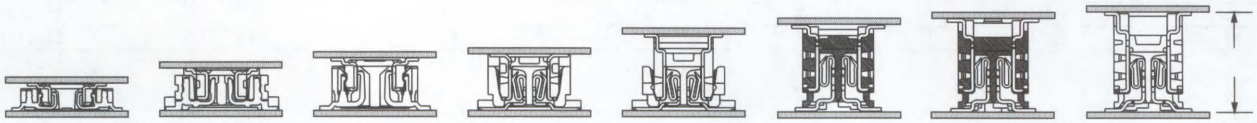

Stacking Height	1.50 (.059)	2.00 (.079)	2.50 (.098)	3.00 (.118)	4.00 (.157)	5.00 (.197)	5.50 (.217)	6.00 (.236)
Receptacle	54037/54137	52974	54102/54105	52991	54167	54154/54206/54230	54230	54124
Plug	53794/53929	53729	53885/53949	53748	53916	53954/55018/55054	55055	53887

0.50mm (.020") Pitch Board-to-Board Receptacle

54037/54137

SMT, Dual Row Vertical Stacking

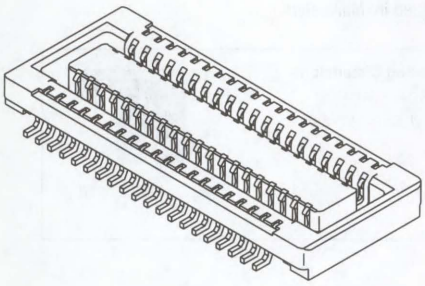

FEATURES AND SPECIFICATIONS

Features and Benefits

- Stacking height: 1.5mm
- Sizes 20 to 100 circuits
- Locking feature provides secure mating
- High temperature housing
- Durable blade on beam contact interface
- Anti-flux design

Reference Information

Packaging: Embossed tape
Mates With: 53794 and 53929
Designed In: Millimeters

Electrical

Voltage: 50V
Current: 0.5A
Contact Resistance: 40mΩ max.
Dielectric Withstanding Voltage: 500V AC
Insulation Resistance: 100 MΩ min.

Physical

Housing: Black glass-filled PPS, UL 94V-0
Contact: Phosphor Bronze
Plating: Gold over Nickel
Operating Temperature: -25 to +85°C

CATALOG DRAWING (FOR REFERENCE ONLY)

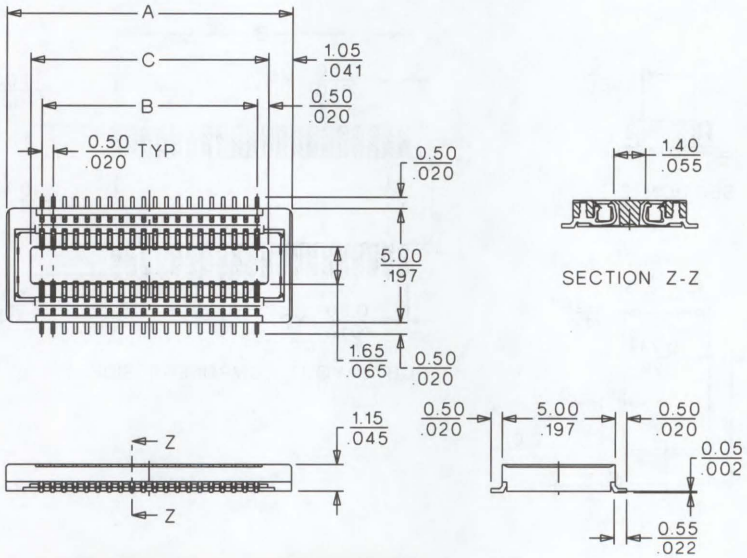

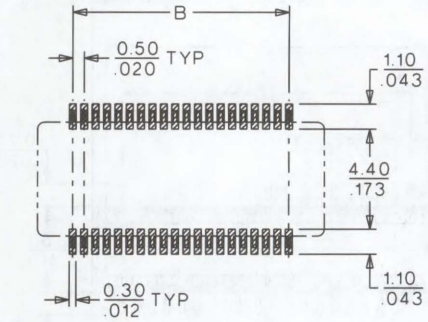

PCB LAYOUT: COMPONENT SIDE

Note: 54037 shown

ORDERING INFORMATION AND DIMENSIONS

Circuits	Order No.		Dimension			Carrier Tape Width
	Without Solder Tab	With Solder Tab	A	B	C	
20	54037-0207		7.60 (.299)	4.50 (.177)	5.50 (.216)	16.00 (.630)
30	54037-0307		10.10 (.397)	7.00 (.275)	8.00 (.314)	24.00 (.945)
40	54037-0407		12.60 (.496)	9.50 (.374)	10.50 (.413)	24.00 (.945)
50	54037-0507		15.10 (.594)	12.00 (.472)	13.00 (.511)	24.00 (.945)
60	54037-0607		17.60 (.692)	14.50 (.570)	15.50 (.610)	32.00 (1.260)
80	54037-0807	54137-0808	22.60 (.889)	19.50 (.767)	20.50 (.807)	44.00 (1.730)
100		54137-1008	27.60 (1.086)	24.50 (.964)	25.50 (1.003)	44.00 (1.730)

Note: Contact Molex for embossed tape specifications
Note: Use only one connector per daughterboard in order to insure proper mating alignment

0.50mm (.020") Pitch Board-to-Board Plug

53794/53929

SMT, Dual Row Vertical Stacking

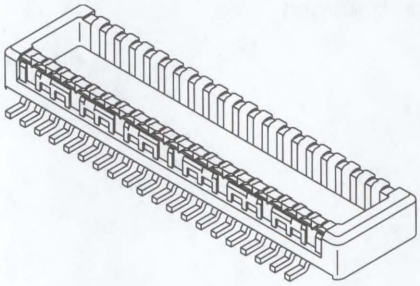

FEATURES AND SPECIFICATIONS

Features and Benefits

- Stacking height: 1.5mm
- Sizes 20 to 100 circuits
- Locking feature provides secure mating
- High temperature housing
- Durable blade on beam contact interface
- Anti-flux design

Reference Information

Packaging: Embossed tape
Mates With: 54037 and 54137
Designed In: Millimeters

Mating Dimensions
53794 • 54037
H=1.5mm W=5.0mm

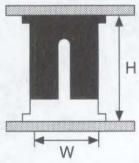

Electrical

Voltage: 50V
Current: 0.5A
Contact Resistance: 40mΩ max.
Dielectric Withstanding Voltage: 500V AC
Insulation Resistance: 100 MΩ min.

Physical

Housing: Black glass-filled LCP, UL 94V-0
Contact: Brass
Plating: Gold over nickel
Operating Temperature: -25 to +85˚C

CATALOG DRAWING (FOR REFERENCE ONLY)

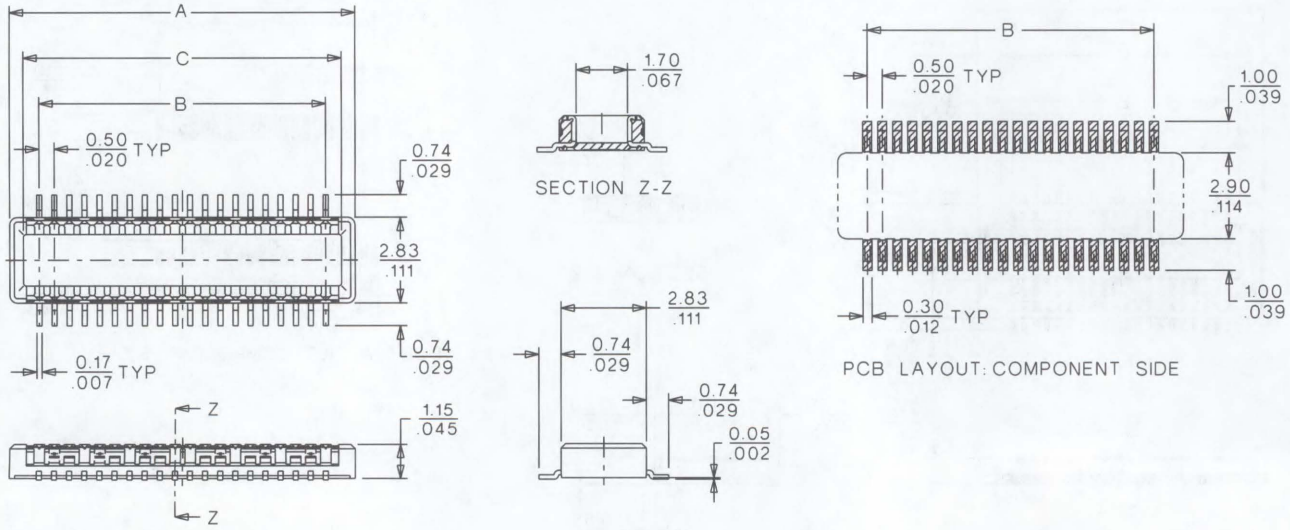

Note: 53794 shown

ORDERING INFORMATION AND DIMENSIONS

Circuits	Order No.		Dimension			Carrier Tape Width
	Without Solder Tab	With Solder Tab	A	B	C	
20	53794-0208		6.45 (.253)	4.50 (.177)	5.55 (.218)	16.00 (.630)
30	53794-0308		8.95 (.352)	7.00 (.275)	8.05 (.317)	24.00 (.945)
40	53794-0408		11.45 (.450)	9.50 (.374)	10.55 (.415)	24.00 (.945)
50	53794-0508		13.95 (.549)	12.00 (.472)	13.05 (.514)	24.00 (.945)
60	53794-0608		16.45 (.647)	14.50 (.570)	15.55 (.612)	32.00 (1.260)
70		53929-0708	20.25 (.797)	17.00 (.669)	18.05 (.711)	32.00 (1.260)
80	53794-0808	53929-0808	21.45 (.844)	19.50 (.767)	20.55 (.809)	44.00 (1.732)
100		53929-1008	27.75 (1.090)	24.50 (.964)	25.55 (1.006)	44.00 (1.732)

Note: Contact Molex for embossed tape specifications
Note: Use only one connector per daughterboard in order to insure proper mating alignment

0.50mm (.020") Pitch Board-to-Board Receptacle

52974

SMT, Dual Row Vertical Stacking

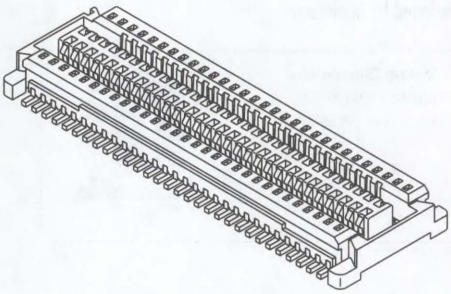

FEATURES AND SPECIFICATIONS

Features and Benefits

- Stacking height: 2.0mm
- Sizes 40 to 80 circuits
- High temperature housing
- Durable blade on beam contact interface
- Anti-flux design

Reference Information

Packaging: Embossed tape
Mates With: 53729
Designed In: Millimeters

Electrical

Voltage: 50V
Current: 0.5A
Contact Resistance: 30mΩ max.
Dielectric Withstanding Voltage: 500V AC
Insulation Resistance: 500 MΩ min.

Physical

Housing: White glass-filled LCP, UL 94V-0
Contact: Phosphor Bronze
Vacuum Pick-Up Tape: Polyimide
Plating: Gold over nickel
Operating Temperature: -40 to +105˚C

CATALOG DRAWING (FOR REFERENCE ONLY)

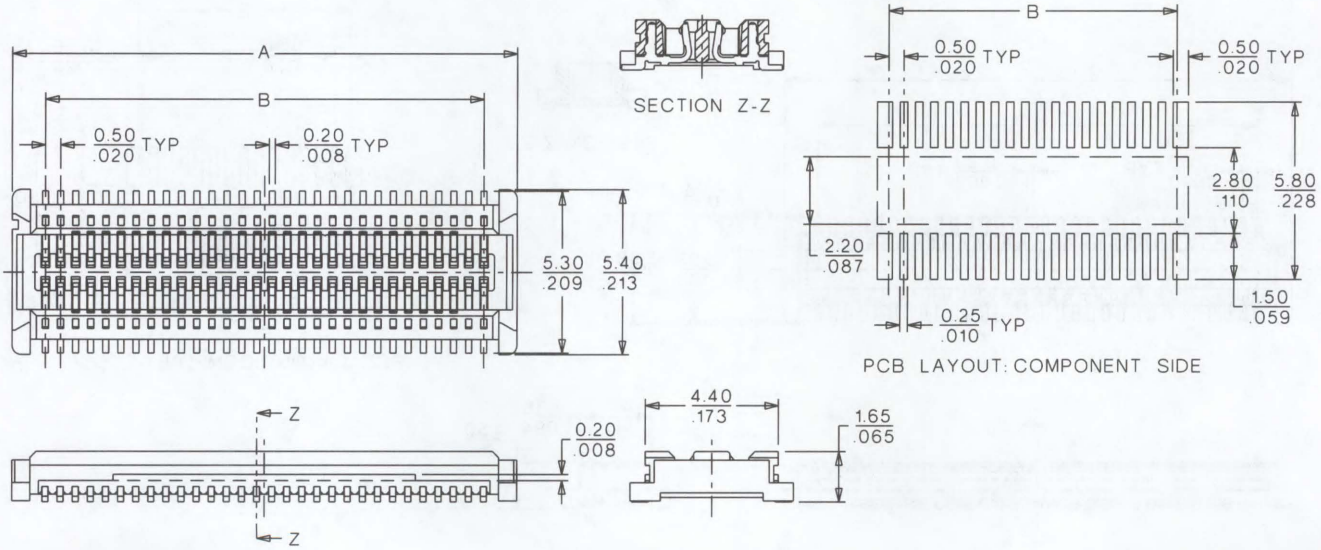

ORDERING INFORMATION AND DIMENSIONS

Circuits	Order No.		Dimension		Carrier Tape Width
	With Vacuum Pick-Up Tape	Without Vacuum Pick-Up Tape	A	B	
40	52974-0404	52974-0408	11.70 (.460)	9.50 (.374)	24.00 (.945)
50	52974-0504	52974-0508	14.20 (.559)	12.00 (.472)	24.00 (.945)
60	52974-0604	52974-0608	16.70 (.657)	14.50 (.570)	24.00 (.945)
80	52974-0804	52974-0808	21.70 (.854)	19.50 (.767)	32.00 (1.260)

Note: Contact Molex for embossed tape specifications

Note: Use only one connector per daughterboard in order to insure proper mating alignment

FEATURES AND SPECIFICATIONS

0.50mm (.020") Pitch Board-to-Board Plug

53729

SMT, Dual Row Vertical Stacking

Features and Benefits

- Stacking height: 2.0mm
- Sizes 40 to 80 circuits
- High temperature housing
- Durable blade on beam contact interface
- Anti-flux design

Reference Information

Packaging: Embossed tape (tube packaging available, contact Molex)
Mates With: 52974
Designed In: Millimeters

Mating Dimensions
53729 • 52974
H=2.0mm W=5.4mm

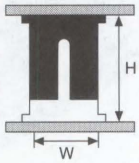

Electrical

Voltage: 50V
Current: 0.5A
Contact Resistance: 30mΩ max.
Dielectric Withstanding Voltage: 500V AC
Insulation Resistance: 500 MΩ min.

Physical

Housing: White glass-filled LCP, UL 94V-0
Contact: Brass
Vacuum Pick-Up Tape: Polyimide
Plating: Gold over Nickel
Operating Temperature: -40 to +105°C

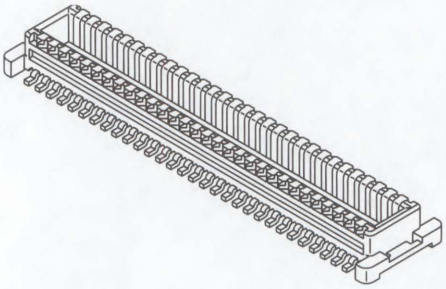

CATALOG DRAWING (FOR REFERENCE ONLY)

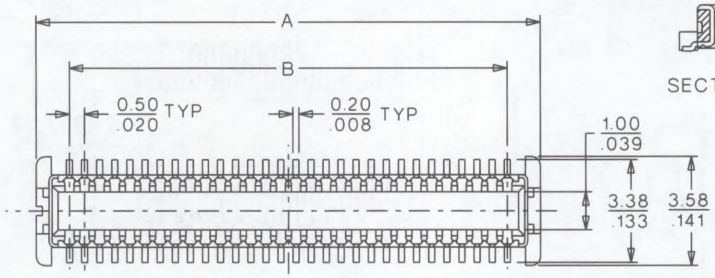

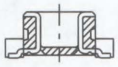

SECTION Z-Z

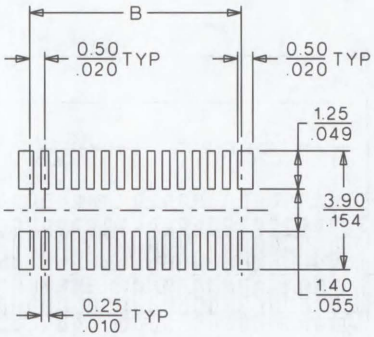

PCB LAYOUT: COMPONENT SIDE

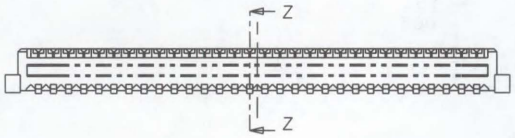

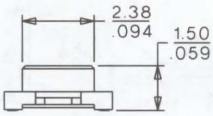

ORDERING INFORMATION AND DIMENSIONS

Circuits	Order No.		Dimension		Carrier Tape Width
	With Vacuum Pick-Up Tape	Without Vacuum Pick-Up Tape	A	B	
40	53729-0404	53729-0408	11.70 (.460)	9.50 (.374)	24.00 (.945)
50	53729-0504	53729-0508	14.20 (.559)	12.00 (.472)	24.00 (.945)
60	53729-0604	53729-0608	16.70 (.657)	14.50 (.570)	24.00 (.945)
80	53729-0804	53729-0808	21.70 (.854)	19.50 (.767)	32.00 (1.260)

Note: Contact Molex for embossed tape specifications
Note: Use only one connector per daughterboard in order to insure proper mating alignment

0.50mm (.020") Pitch Board-to-Board Receptacle Housing

54363

SMT, Dual Row Vertical Stacking

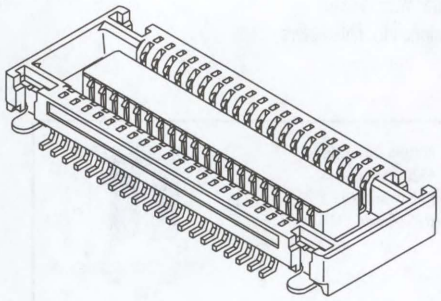

FEATURES AND SPECIFICATIONS

Features and Benefits

- Stacking height: 2.00 (.079") and 3.00mm (.118")
- Sizes 20 to 140 circuits
- Locking feature provides secture mating
- Metal solder tabs provide pcb hold-down and strain relief for SMT tails
- Durable blade on beam contact interface
- Anti-flux design

Reference Information

Packaging: Embossed
Mates With: 55201 and 55299
Designed In: Millimeters

Electrical

Voltage: 50V
Current: 0.5A*
Contact Resistance: Mate With 55201: 40mΩ max.
Mate With 55299: 50mΩ max.
Dielectric Withstanding Voltage: 125V AC/1 min.
Insulation Resistance: 100 MΩ min.

Physical

Housing: Black glass-filled LCP, UL 94V-0
Contact: Copper Alloy
Plating: Gold over Nickel
Solder tab: Copper Alloy, Tin/Lead over Copper plating
Operating Temperature: -25 to +85°C

* Total current must not exceed 10A max.

CATALOG DRAWING (FOR REFERENCE ONLY)

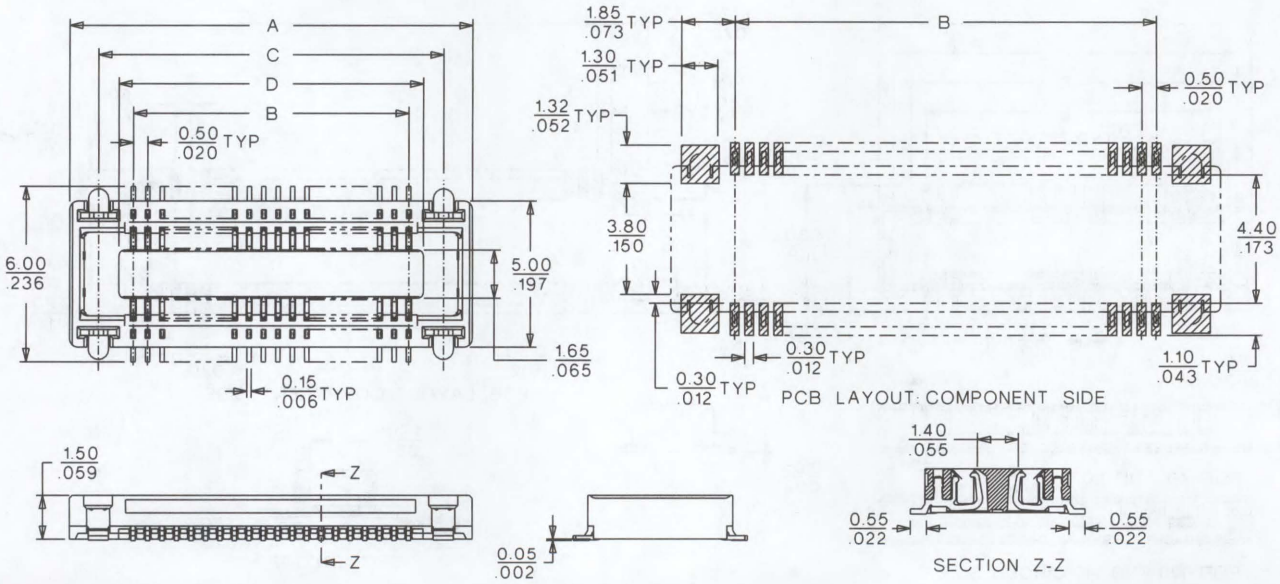

ORDERING INFORMATION AND DIMENSIONS

Circuits	Order No.	Dimension				Tape Width
		A	B	C	D	
20	54363-0208	8.90 (.350)	4.50 (.177)	6.90 (.272)	5.50 (.217)	16.00 (.630)
40	54363-0408	13.90 (.547)	9.50 (.374)	11.90 (.469)	10.50 (.413)	24.00 (.945)
80	54363-0808	23.90 (.941)	19.50 (.768)	21.90 (.862)	20.50 (.807)	44.00 (1.732)
100	54363-1008	28.90 (1.138)	24.50 (.965)	26.90 (1.059)	25.50 (1.004)	
120	54363-1208	33.90 (1.335)	29.50 (1.161)	31.90 (1.256)	30.50 (1.201)	56.00 (2.205)
140	54363-1408	38.90 (1.531)	34.50 (1.358)	36.90 (1.453)	35.50 (1.398)	

0.50mm (.020") Pitch Board-to-Board Plug

55201

SMT, Dual Row Vertical Stacking

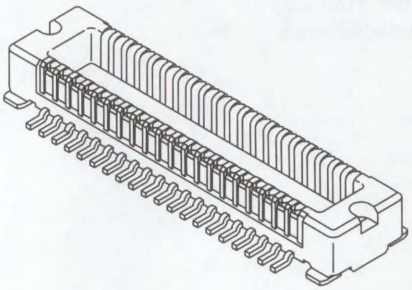

FEATURES AND SPECIFICATIONS

Features and Benefits

- Stacking height: 2.00mm (.079")
- Sizes 20 to 140 circuits
- Locking feature provides secure mating
- Metal solder tabs provide PCB hold-down and strain relief for SMT tails
- Durable blade on beam contact interface
- Anti-flux design

Reference Information

Packaging: Embossed
Mates With: 54363
Designed In: Millimeters

Mating Dimensions
55201/54363
H=2.00mm (.079")
W=5.00mm (.197")

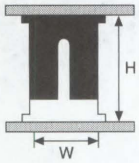

Electrical

Voltage: 50V
Current: 0.5A*
Contact Resistance: 40mΩ max.
Dielectric Withstanding Voltage: 125V AC/1 min.
Insulation Resistance: 100 MΩ min.

Physical

Housing: Black glass-filled LCP, UL 94V-0
Contact: Copper Alloy
Plating: Gold over Nickel
Solder Tab: Copper Alloy, Tin/Lead over Copper plating
Operating Temperature: -25 to +85°C

* Total current must not exceed 10A max.

CATALOG DRAWING (FOR REFERENCE ONLY)

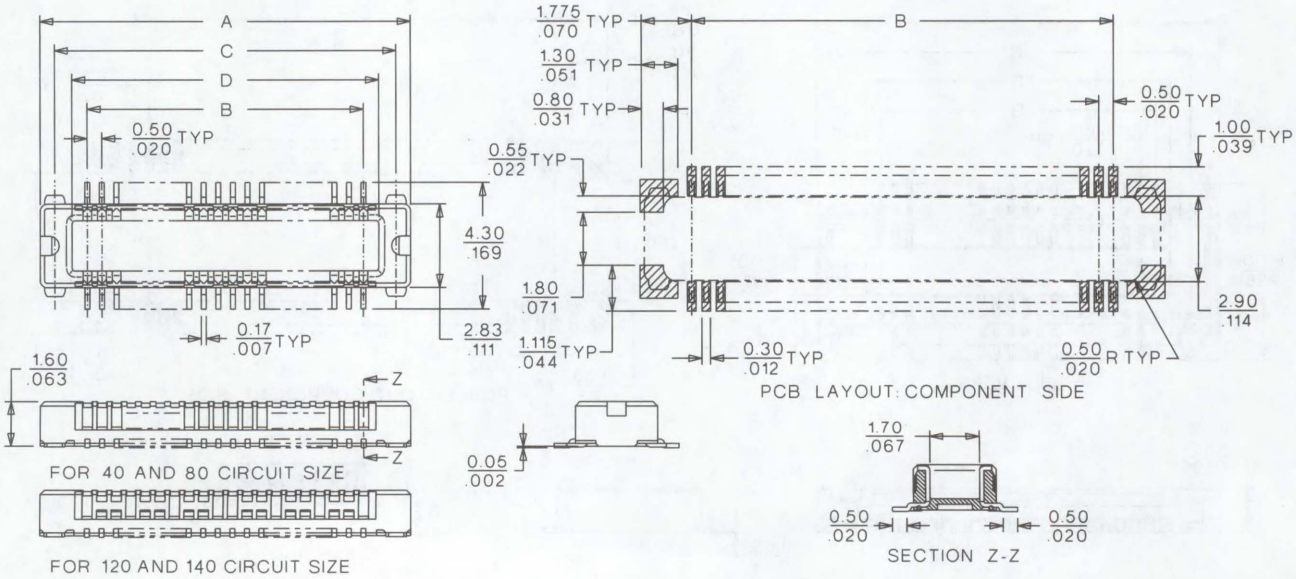

ORDERING INFORMATION AND DIMENSIONS

Circuits	Order No.	Dimension				Tape Width
		A	B	C	D	
20	55201-0208	7.75 (.305)	4.50 (.177)	6.75 (.266)	5.55 (.217)	16.00 (.630)
40	55201-0408	12.75 (.502)	9.50 (.374)	11.75 (.463)	10.55 (.415)	24.00 (.945)
80	55201-0808	22.75 (.896)	19.50 (.768)	21.75 (.856)	20.55 (.809)	44.00 (1.732)
120	55201-1208	32.75 (1.289)	29.50 (1.161)	31.75 (1.250)	30.55 (1.203)	56.00 (2.205)
140	55201-1408	37.75 (1.486)	34.50 (1.358)	36.75 (1.447)	35.55 (1.400)	

0.50mm (.020") Pitch Board-to-Board Plug

55299

SMT, Dual Row Vertical Stacking

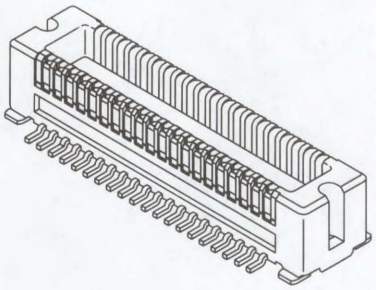

FEATURES AND SPECIFICATIONS

Features and Benefits

- Stacking height: 3.00mm (.118")
- Sizes 100 and 140 circuits
- Locking feature provides secure mating
- Metal solder tabs provide PCB hold-down and strain relief for SMT tails
- Durable blade on beam contact interface
- Anti-flux design

Reference Information

Packaging: Embossed
Mates With: 54363
Designed In: Millimeters

Mating Dimensions
55299/54363
H=3.00mm (.118")
W=5.00mm (.197")

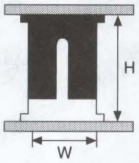

Electrical

Voltage: 50V
Current: 0.5A*
Contact Resistance: 50mΩ max.
Dielectric Withstanding Voltage: 125V AC/1 min.
Insulation Resistance: 100 MΩ min.

Physical

Housing: Black glass-filled LCP, UL 94V-0
Contact: Copper Alloy
Plating: Gold over Nickel
Solder Tab: Copper Alloy, Tin/Lead over Copper plating
Operating Temperature: -25 to +85°C

* Total current must not exceed 10A max.

CATALOG DRAWING (FOR REFERENCE ONLY)

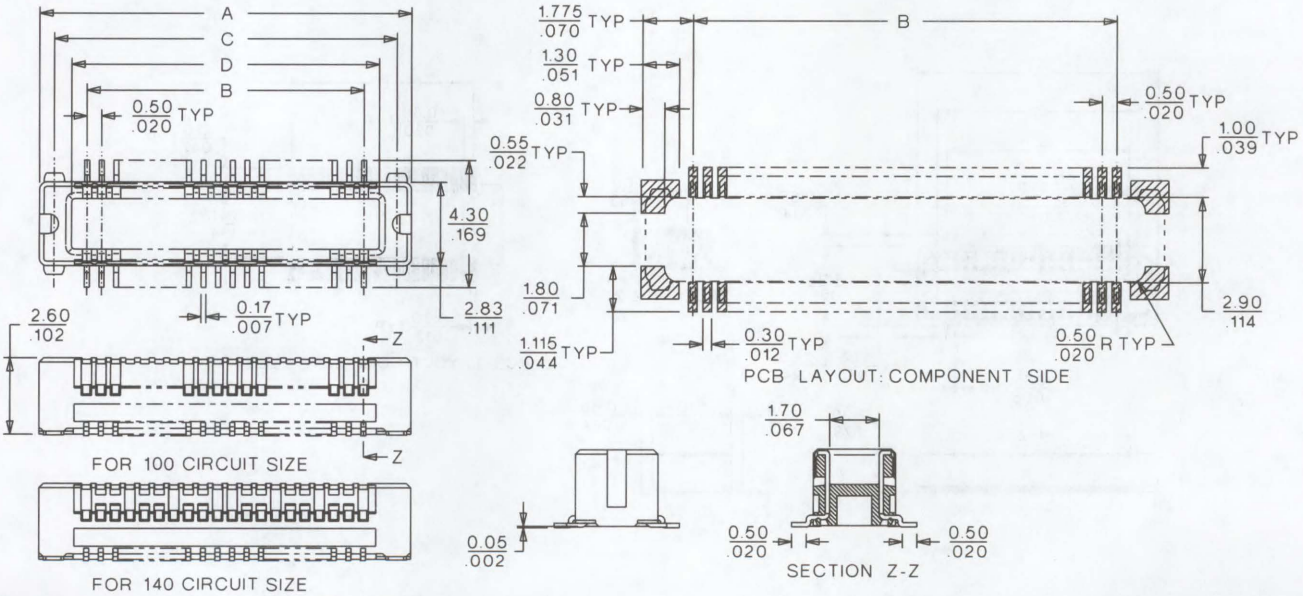

ORDERING INFORMATION AND DIMENSIONS

Circuits	Order No.	Dimension				Tape Width
		A	B	C	D	
100	55299-1008	27.75 (1.093)	24.50 (.965)	26.75 (1.053)	25.55 (1.006)	44.00 (1.732)
140	55299-1408	37.75 (1.486)	34.50 (1.358)	36.75 (1.447)	35.55 (1.400)	56.00 (2.205)

0.50mm (.020") Pitch Board-to-Board Receptacle Housing

54102

SMT, Dual Row Vertical Stacking

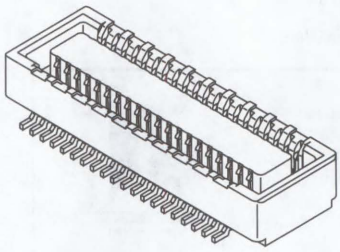

FEATURES AND SPECIFICATIONS

Features and Benefits

- Stacking height: 2.50mm (.098")
- Sizes 20, 30, 50, 60 and 70 circuits
- Locking feature provides secure mating
- Durable blade on beam contact interface
- Anti-flux design

Reference Information

Packaging: Embossed
Mates With: 53885
Designed In: Millimeters

Electrical

Voltage: 50V
Current: 0.5A
Contact Resistance: 40mΩ max.
Dielectric Withstanding Voltage: 500V AC/1 min.
Insulation Resistance: 100 MΩ min.

Physical

Housing: Black glass-filled PPA, UL 94V-0
Contact: Phosphor Bronze
Plating: Gold over Nickel
Operating Temperature: -40 to +85°C

CATALOG DRAWING (FOR REFERENCE ONLY)

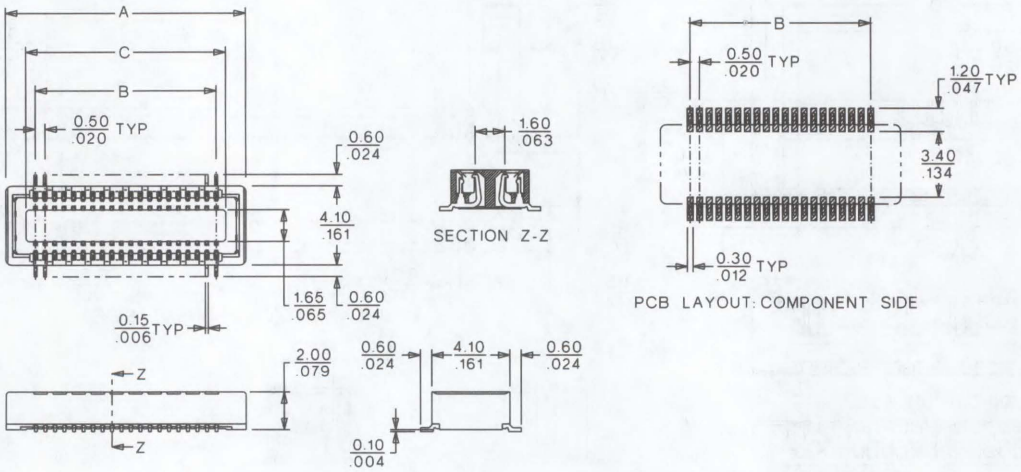

ORDERING INFORMATION AND DIMENSIONS

Circuits	Order No.	Dimension			Tape Width
		A	B	C	
20	54102-0208	7.60 (.299)	4.50 (.177)	5.50 (.217)	16.00 (.630)
30	54102-0308	10.10 (.398)	7.00 (.276)	8.00 (.315)	24.00 (.945)
40	54102-0408	12.60 (.496)	9.50 (.374)	10.50 (.413)	
50	54102-0508	15.10 (.594)	12.00 (.472)	13.00 (.512)	
60	54102-0608	17.60 (.693)	14.50 (.571)	15.50 (.610)	32.00 (1.260)
70	54102-0708	20.10 (.791)	17.00 (.669)	18.00 (.709)	

0.50mm (.020") Pitch Board-to-Board Plug

53885

SMT, Dual Row Vertical Stacking

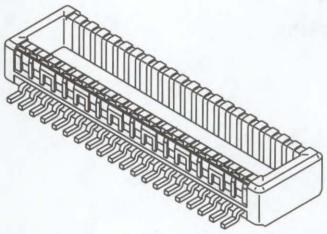

FEATURES AND SPECIFICATIONS

Features and Benefits

- Stacking height: 2.50mm (.098")
- Sizes 20, 30, 50, 60 and 70 circuits
- Locking feature provides secure mating
- Durable blade on beam contact interface
- Anti-flux design

Reference Information

Packaging: Embossed
Mates With: 54102
Designed In: Millimeters

Electrical

Voltage: 50V
Current: 0.5A
Contact Resistance: 40mΩ max.
Dielectric Withstanding Voltage: 500V AC/1 min.
Insulation Resistance: 100 MΩ min.

Physical

Housing: Black glass-filled LCP, UL 94V-0
Contact: Brass
Plating: Gold over Nickel
Operating Temperature: -40 to +85°C

Mating Dimensions
53885/54102
H=2.50mm (.098")
W=4.10mm (.161")

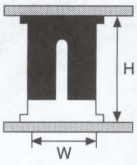

CATALOG DRAWING (FOR REFERENCE ONLY)

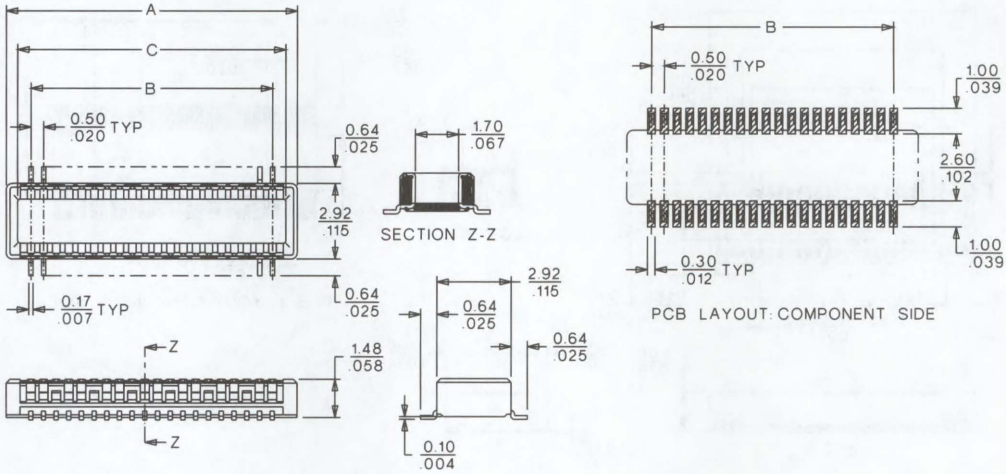

ORDERING INFORMATION AND DIMENSIONS

Circuits	Order No.	Dimension			Lock Position	Tape Width
		A	B	C		
20	53885-0208	6.45 (.254)	4.50 (.177)	5.55 (.219)	All	16.00 (.630)
30	53885-0308	8.95 (.352)	7.00 (.276)	8.05 (.317)	1, 3, 5, 7, 9, 11, 13, 15	24.00 (.945)
40	53885-0408	11.45 (.451)	9.50 (.374)	10.55 (.415)	3, 6, 9, 12, 15, 18	
50	53885-0508	13.95 (.549)	12.00 (.472)	13.05 (.514)	4, 10, 16, 22	
60	53885-0608	16.45 (.648)	14.50 (.571)	15.55 (.612)	10, 21	32.00 (1.260)
70	53885-0708	18.95 (.746)	17.00 (.669)	18.05 (.711)	None	

0.50mm (.020") Pitch Board-to-Board Receptacle Housing

54150

SMT, Dual Row Vertical Stacking

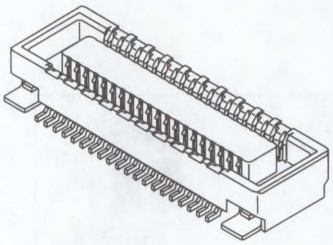

FEATURES AND SPECIFICATIONS

Features and Benefits

- Stacking height: 2.50mm (.098")
- Sizes 50 and 80 circuits
- Locking feature provides secure mating
- Metal solder tabs provide PCB hold-down and strain relief for SMT tails
- Durable blade on beam contact interface
- Anti-flux design

Reference Information

Packaging: Embossed
Mates With: 53949
Designed In: Millimeters

Electrical

Voltage: 50V
Current: 0.5A
Contact Resistance: 40mΩ max.
Dielectric Withstanding Voltage: 500V AC/1 min.
Insulation Resistance: 100 MΩ min.

Physical

Housing: Black glass-filled PPA, UL 94V-0
Contact: Phosphor Bronze
Plating: Gold over Nickel
Solder Tab: Phosphor Bronze, Tin/Lead over Copper plating
Operating Temperature: -40 to +85°C

CATALOG DRAWING (FOR REFERENCE ONLY)

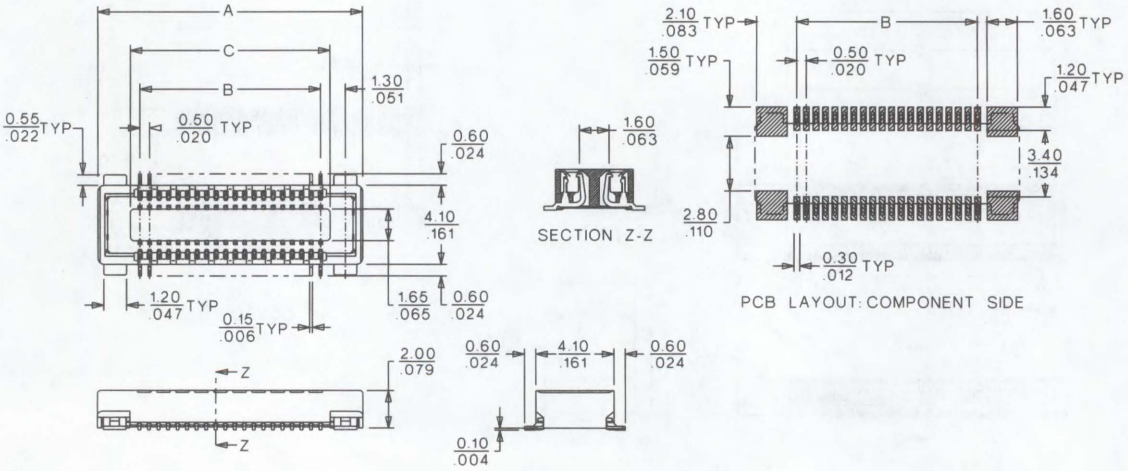

ORDERING INFORMATION AND DIMENSIONS

Circuits	Order No.	Dimension			Tape Width
		A	B	C	
50	54150-0508	16.40 (.646)	12.00 (.472)	13.00 (.512)	32.00 (1.260)
80	54150-0808	23.90 (.941)	19.50 (.768)	20.50 (.807)	44.00 (1.732)

0.50mm (.020") Pitch Board-to-Board Plug

53949

SMT, Dual Row Vertical Stacking

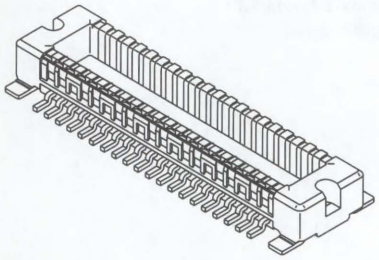

FEATURES AND SPECIFICATIONS

Features and Benefits

- Stacking height: 2.50mm (.0.98")
- Sizes 50 and 80 circuits
- Locking feature provides secure mating
- Metal solder tabs provide PCB hold-down and strain relief for SMT tails
- Durable blade on beam contact interface
- Anti-flux design

Reference Information

Packaging: Embossed
Mates With: 54150
Designed In: Millimeters

Mating Dimensions
53949/54150
H=2.50mm (.098")
W=4.10mm (.161")

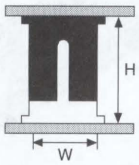

Electrical

Voltage: 50V
Current: 0.5A
Contact Resistance: 40mΩ max.
Dielectric Withstanding Voltage: 500V AC/1 min.
Insulation Resistance: 100 MΩ min.

Physical

Housing: Black glass-filled LCP, UL 94V-0
Contact: Brass
Plating: Gold over Nickel
Solder Tab: Phosphor Bronze, Tin/Lead over Copper plating
Operating Temperature: -40 to +85°C

CATALOG DRAWING (FOR REFERENCE ONLY)

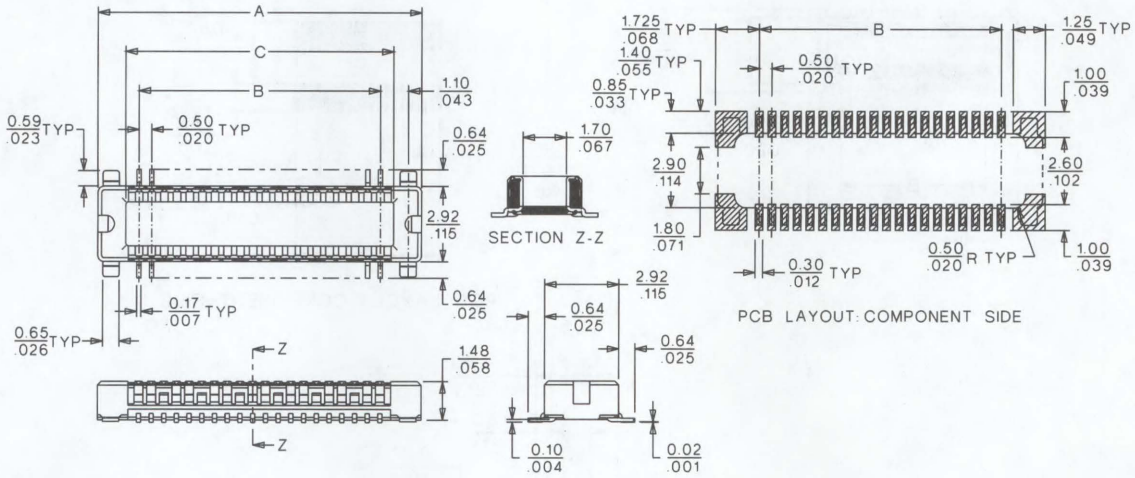

ORDERING INFORMATION AND DIMENSIONS

Circuits	Order No.	Dimension			Lock Position	Tape Width
		A	B	C		
50	53949-0508	15.25 (.600)	12.00 (.472)	13.05 (.514)	4, 10, 16, 22	32.00 (1.260)
80	53949-0808	22.75 (.896)	19.50 (.768)	20.55 (.809)	None	44.00 (1.732)

0.50mm (.020") Pitch Board-to-Board Receptacle

52991

SMT, Dual Row Vertical Stacking

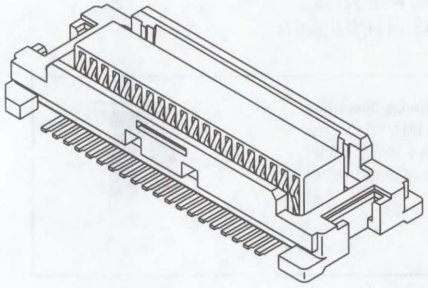

FEATURES AND SPECIFICATIONS

Features and Benefits

- Stacking Heights: 3.0 and 4.0mm
- Sizes 20 to 80 circuits
- Locking feature provides secure mating
- High temperature housing
- Durable blade on beam contact interface
- Anti-flux design

Reference Information

Packaging: Embossed tape
Mates With: 53748 (H=3.0mm)
53916 (H=4.0mm)
Designed In: Millimeters

Electrical

Voltage: 50V
Current: 0.5A
Contact Resistance: 50mΩ max.
Dielectric Withstanding Voltage: 500V AC
Insulation Resistance: 100 MΩ min.

Physical

Housing: White glass-filled LCP plastic, UL 94V-0
Contact: Phosphor Bronze
Plating: Gold over Nickel
Operating Temperature: -40 to +105°C

CATALOG DRAWING (FOR REFERENCE ONLY)

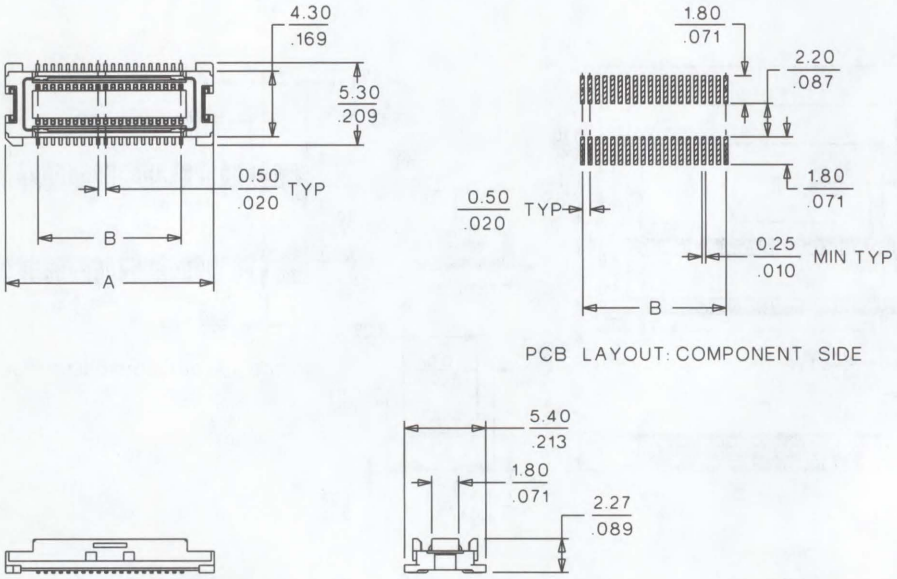

ORDERING INFORMATION AND DIMENSIONS

Circuits	Order No.	Dimension		Carrier Tape Width
		A	B	
20	52991-0208	8.80 (.346)	4.50 (.177)	16.00 (.630)
30	52991-0308	11.30 (.170)	7.00 (.275)	24.00 (.945)
40	52991-0408	13.80 (.444)	9.50 (.374)	24.00 (.945)
50	52991-0508	16.30 (.641)	12.00 (.472)	32.00 (1.260)
60	52991-0608	18.80 (.740)	14.50 (.570)	32.00 (1.260)
70	52991-0708	21.30 (.838)	17.00 (.669)	44.00 (1.732)
80	52991-0808	23.80 (.937)	19.50 (.767)	44.00 (1.732)

Note: Contact Molex for embossed tape specifications
Note: Use only one connector per daughterboard in order to insure proper mating alignment

0.50mm (.020") Pitch Board-to-Board Plug

53748

SMT, Dual Row Vertical Stacking

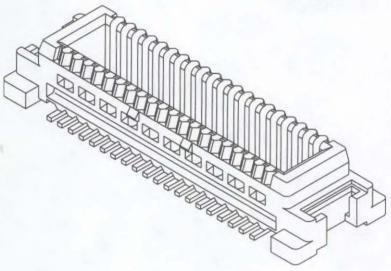

FEATURES AND SPECIFICATIONS

Features and Benefits

- Stacking height: 3.0mm
- Sizes 20 to 80 circuits
- Locking feature provides secure mating
- High temperature housing
- Durable blade on beam contact interface
- Anti-flux design

Reference Information

Packaging: Embossed tape
Mates With: 52991
Designed In: Millimeters

Mating Dimensions
53748 • 52991
H=3.0mm W=5.4mm

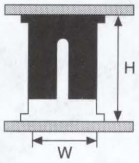

Electrical

Voltage: 50V
Current: 0.5A
Contact Resistance: 50mΩ max.
Dielectric Withstanding Voltage: 500V AC
Insulation Resistance: 100 MΩ min.

Physical

Housing: White glass-filled LCP plastic, UL 94V-0
Contact: Brass
Plating: Gold over Nickel
Operating Temperature: -40 to +105°C

CATALOG DRAWING (FOR REFERENCE ONLY)

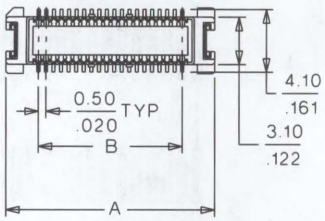

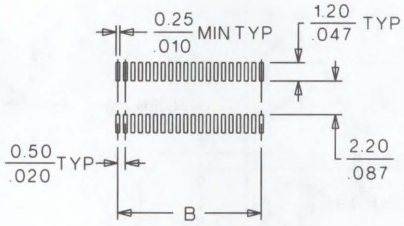

PCB LAYOUT: COMPONENT SIDE

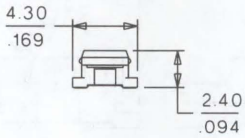

ORDERING INFORMATION AND DIMENSIONS

Circuits	Order No.		Dimension		Carrier Tape Width
	With Vacuum Pick-up Tape	Without Vacuum Pick-up Tape	A	B	
20	53748-0204	53748-0208	8.80 (.346)	4.50 (.177)	16.00 (.630)
30	53748-0304	53748-0308	11.30 (.170)	7.00 (.275)	24.00 (.945)
40	53748-0404	53748-0408	13.80 (.444)	9.50 (.374)	24.00 (.945)
50	53748-0504	53748-0508	16.30 (.641)	12.00 (.472)	32.00 (1.260)
60	53748-0604	53748-0608	18.80 (.740)	14.50 (.570)	32.00 (1.260)
70	53748-0704	53748-0708	21.30 (.838)	17.00 (.669)	44.00 (1.732)
80		53748-0808	23.80 (.937)	19.50 (.767)	44.00 (1.732)

Note: Contact Molex for embossed tape specifications
Note: Use only one connector per daughterboard in order to insure proper mating alignment

0.50mm (.020") Pitch Board-to-Board Receptacle

54167

SMT, Dual Row Vertical Stacking

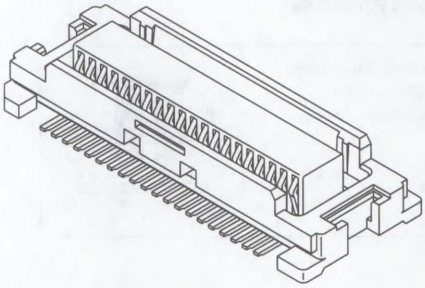

FEATURES AND SPECIFICATIONS

Features and Benefits

- Stacking height: 4.0mm
- Sizes 20 to 70 circuits
- Locking feature provides secure mating
- High temperature housing
- Durable blade on beam contact interface
- Anti-flux design

Reference Information

Packaging: Embossed tape
Mates With: 53916
Designed In: Millimeters

Electrical

Voltage: 50V
Current: 0.5A
Contact Resistance: 60mΩ max.
Dielectric Withstanding Voltage: 500V AC
Insulation Resistance: 100 MΩ min.

Physical

Housing: Black glass-filled LCP, UL 94V-0
Contact: Phosphor Bronze
Plating: Gold over Nickel
Operating Temperature: -40 to +105°C

CATALOG DRAWING (FOR REFERENCE ONLY)

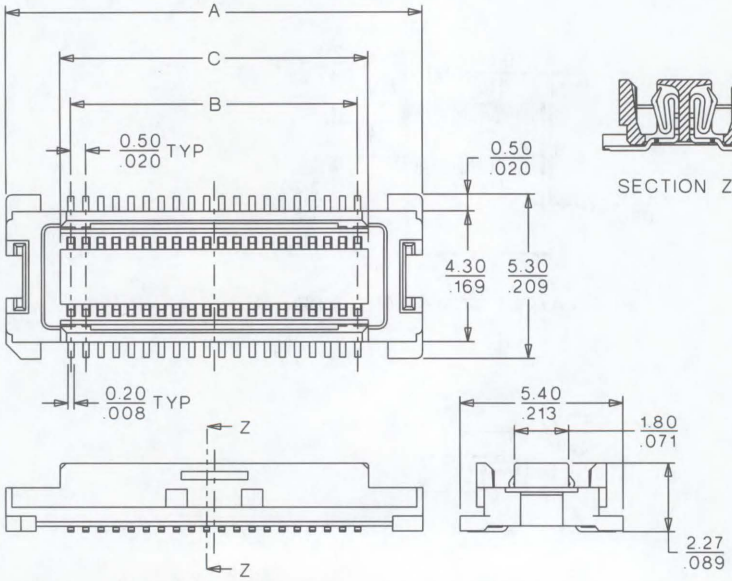

SECTION Z-Z

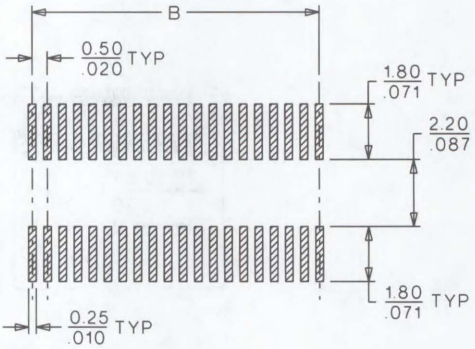

PCB LAYOUT: COMPONENT SIDE

ORDERING INFORMATION AND DIMENSIONS

Circuits	Order No.	Dimension			Carrier Tape Width
		A	B	C	
20	54167-0208	8.80 (.346)	4.50 (.177)	5.20 (.204)	16.00 (.630)
30	54167-0308	11.30 (.170)	7.00 (.275)	7.70 (.303)	24.00 (.945)
40	54167-0408	13.80 (.444)	9.50 (.374)	10.20 (.401)	24.00 (.945)
50	54167-0508	16.30 (.641)	12.00 (.472)	12.70 (.500)	32.00 (1.260)
60	54167-0608	18.80 (.740)	14.50 (.570)	15.20 (.598)	32.00 (1.260)
70	54167-0708	21.30 (.839)	17.00 (.669)	17.70 (.697)	32.00 (1.260)

Note: Contact Molex for embossed tape specifications
Note: Use only one connector per daughterboard in order to insure proper mating alignment

0.50mm (.020") Pitch Board-to-Board Plug

53916

SMT, Dual Row Vertical Stacking

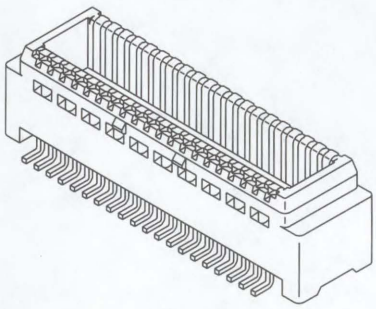

FEATURES AND SPECIFICATIONS

Features and Benefits

- Stacking height: 4.0mm
- Sizes 20 to 60 circuits
- Locking feature provides secure mating
- High temperature housing
- Durable blade on beam contact interface
- Anti-flux design

Reference Information

Packaging: Embossed tape
Mates With: 52991, 54167
Designed In: Millimeters

Mating Dimensions
53916 • 52991/54167
H=4.0mm W=5.4mm

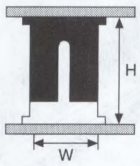

Electrical

Voltage: 50V
Current: 0.5A
Contact Resistance: 60mΩ max.
Dielectric Withstanding Voltage: 500V AC
Insulation Resistance: 100 MΩ min.

Physical

Housing: Black glass-filled LCP, UL 94V-0
Contact: Brass
Plating: Gold over Nickel
Operating Temperature: -40 to +105°C

CATALOG DRAWING (FOR REFERENCE ONLY)

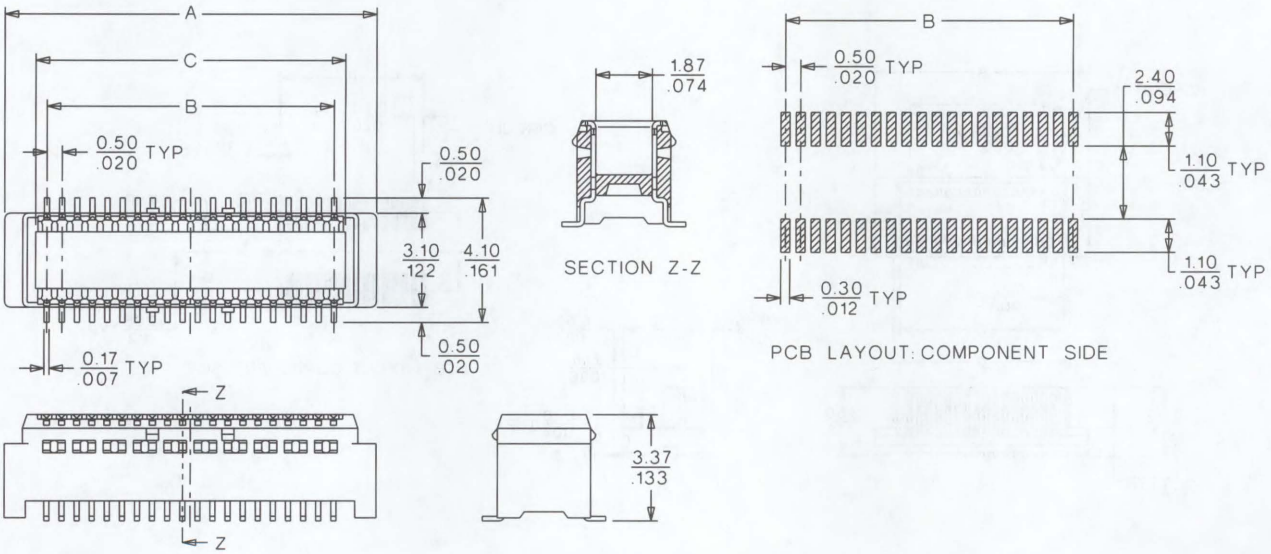

ORDERING INFORMATION AND DIMENSIONS

Circuits	Order No.		Dimension			Carrier Tape Width
	With Vacuum Pick-up Tape	Without Vacuum Pick-up Tape	A	B	C	
20	53916-0204	53916-0208	7.30 (.287)	4.50 (.177)	5.24 (.206)	24.00 (.945)
30	53916-0304	53916-0308	9.80 (.385)	7.00 (.275)	7.74 (.304)	24.00 (.945)
40	53916-0404	53916-0408	12.30 (.484)	9.50 (.374)	10.24 (.403)	24.00 (.945)
50	53916-0504	53916-0508	14.80 (.484)	12.00 (.472)	12.74 (.501)	24.00 (.945)
60	53916-0604	53916-0608	17.30 (.681)	14.50 (.570)	15.24 (.600)	32.00 (1.260)

Note: Contact Molex for embossed tape specifications
Note: Use only one connector per daughterboard in order to insure proper mating alignment

0.50mm (.020") Pitch Board-to-Board Receptacle Housing

54206

SMT, Dual Row Vertical Stacking

FEATURES AND SPECIFICATIONS

Features and Benefits

- Stacking height: 5.00mm (.197")
- Sizes 60 circuits
- Polarized design
- Durable blade on beam contact interface
- Anti-flux design

Reference Information

Packaging: Embossed
Mates With: 55018
Designed In: Millimeters

Electrical

Voltage: 50V
Current: 0.4A
Contact Resistance: 80mΩ max.
Dielectric Withstanding Voltage: 500V AC/1 min.
Insulation Resistance: 500 MΩ min.

Physical

Housing: LCP, UL 94V-0
Contact: Phosphor Bronze
Plating: Gold over Nickel
Operating Temperature: -40 to +85°C

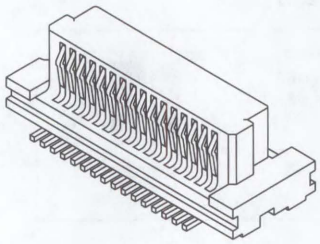

CATALOG DRAWING (FOR REFERENCE ONLY)

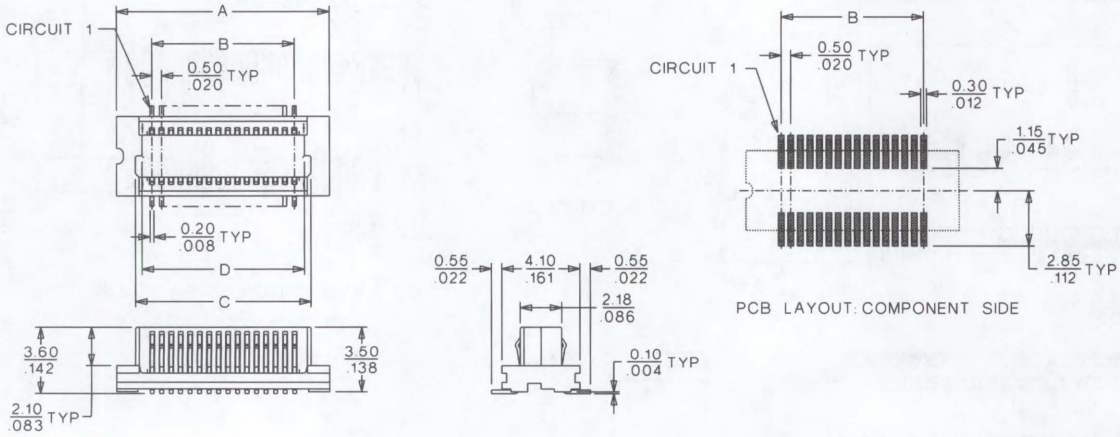

ORDERING INFORMATION AND DIMENSIONS

Circuits	Order No.	Dimension				Tape Width
		A	B	C	D	
60	54206-0609	18.20 (.717)	14.50 (.571)	16.25 (.640)	15.55 (.612)	32.00 (1.260)

0.50mm (.020") Pitch Board-to-Board Plug

55018

SMT, Dual Row Vertical Stacking

FEATURES AND SPECIFICATIONS

Features and Benefits

- Stacking height: 5.00mm (.197")
- Sizes 60 circuits
- Polarized design
- Durable blade on beam contact interface
- Anti-flux design

Reference Information

Packaging: Embossed
Mates With: 54206
Designed In: Millimeters

Electrical

Voltage: 50V
Current: 0.4A
Contact Resistance: 80mΩ max.
Dielectric Withstanding Voltage: 500V AC/1 min.
Insulation Resistance: 500 MΩ min.

Physical

Housing: LCP, UL 94V-0
Contact: Copper Alloy
Plating: Gold over Nickel
Operating Temperature: -40 to +85°C

Mating Dimensions
55108/54206
H=5.00mm (.197")
W=4.10mm (.161")

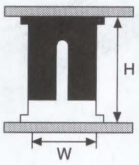

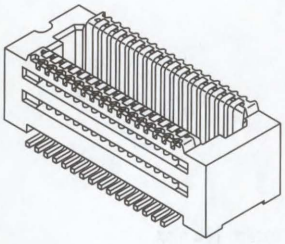

CATALOG DRAWING (FOR REFERENCE ONLY)

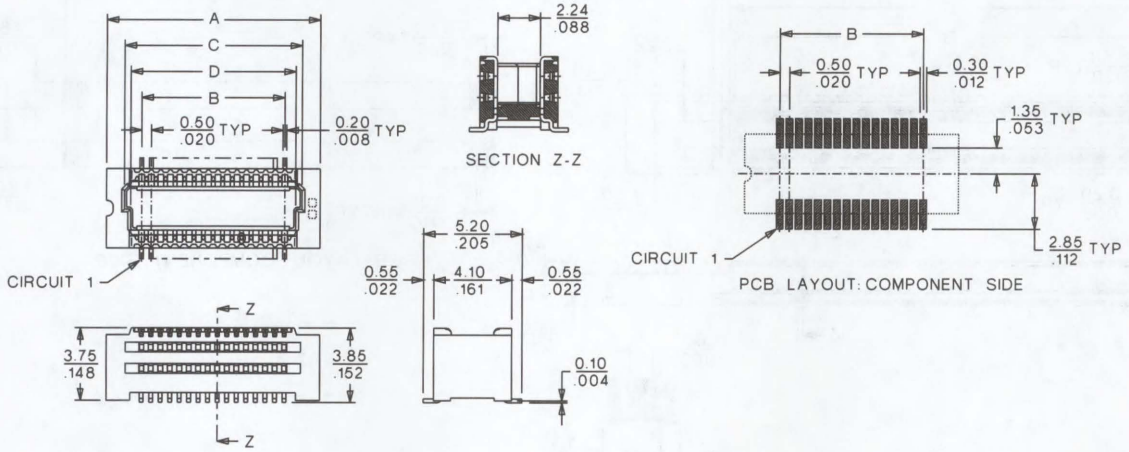

ORDERING INFORMATION AND DIMENSIONS

Circuits	Order No.	Dimension				Tape Width
		A	B	C	D	
60	55018-0609	18.20 (.717)	14.50 (.571)	16.30 (.642)	15.65 (.616)	32.00 (1.260)

0.50mm (.020") Pitch Board-to-Board Receptacle

54450

SMT, Dual Row Vertical Stacking

FEATURES AND SPECIFICATIONS

Features and Benefits

- Stacking height: 5.00mm (.197")
- Sizes 140 circuits
- Corner flanges protect SMT tails
- Durable blade on beam contact interface
- Anti-flux design

Reference Information

Packaging: Embossed
Mates With: 55306
Designed In: Millimeters

Electrical

Voltage: 50V
Current: 0.5A*
Contact Resistance: 70mΩ max.
Dielectric Withstanding Voltage: 125V AC/1 min.
Insulation Resistance: 100 MΩ min.

Physical

Housing: White glass-filled LCP, UL 94V-0
Contact: Copper Alloy
Plating: Gold over Nickel
Operating Temperature: -25 to +85°C

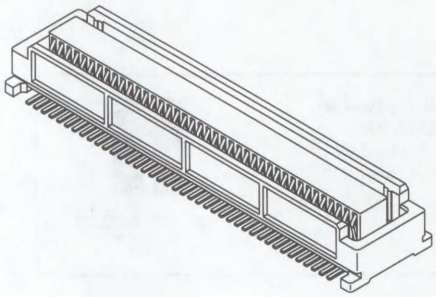

* Total current must not exceed 16A max.

CATALOG DRAWING (FOR REFERENCE ONLY)

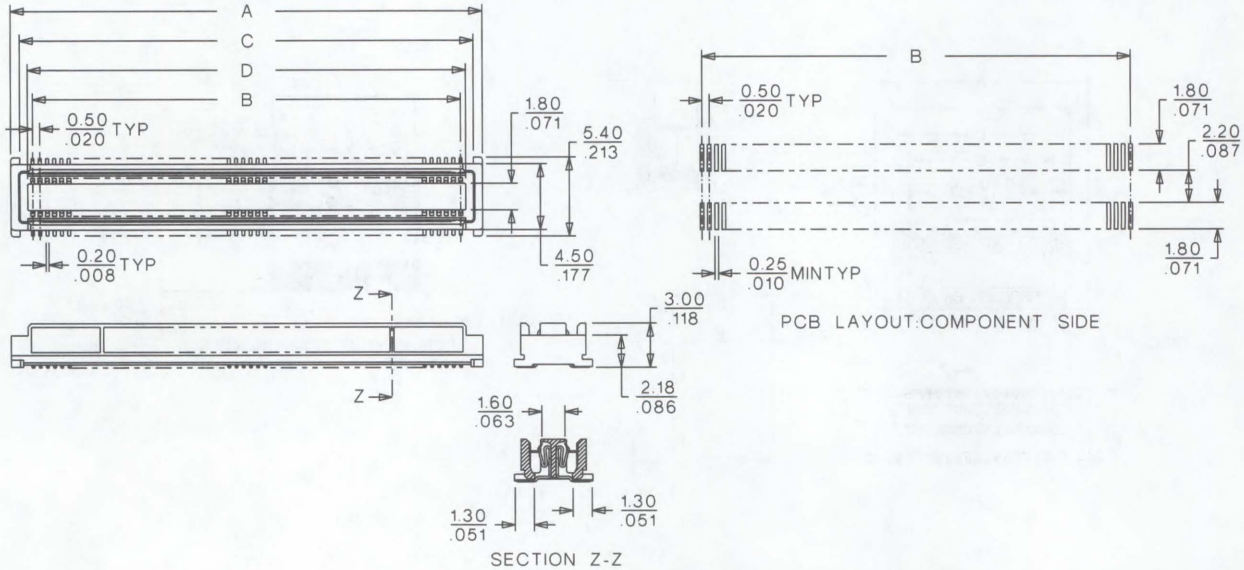

ORDERING INFORMATION AND DIMENSIONS

Circuits	Order No.	Dimension				Tape Width
		A	B	C	D	
140	54450-1408	37.50 (1.476)	34.50 (1.358)	36.25 (1.427)	35.20 (1.386)	56.00 (2.205)

0.50mm (.020") Pitch Board-to-Board Plug

55306

SMT, Dual Row Vertical Stacking

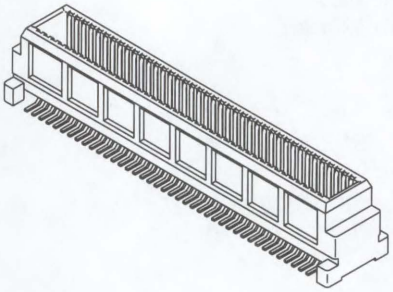

FEATURES AND SPECIFICATIONS

Features and Benefits

- Stacking height: 5.00mm (.197")
- Sizes 140 circuits
- Corner flanges protect SMT tails
- Durable blade on beam contact interface

Reference Information

Packaging: Embossed
Mates With: 54450
Designed In: Millimeters

Electrical

Voltage: 50V
Current: 0.5A*
Contact Resistance: 70mΩ max.
Dielectric Withstanding Voltage: 125V AC/1 min.
Insulation Resistance: 100 MΩ min.

Physical

Housing: White glass-filled LCP, UL 94V-0
Contact: Copper Alloy
Plating: Gold over Nickel in contact area;
Tin/Lead over Nickel in solder tail area
Operating Temperature: -25 to +85°C

Mating Dimensions
55306/54450
H=5.00mm (.197")
W=5.40mm (.213")

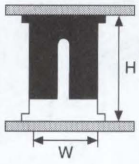

* Total current must not exceed 16A max.

CATALOG DRAWING (FOR REFERENCE ONLY)

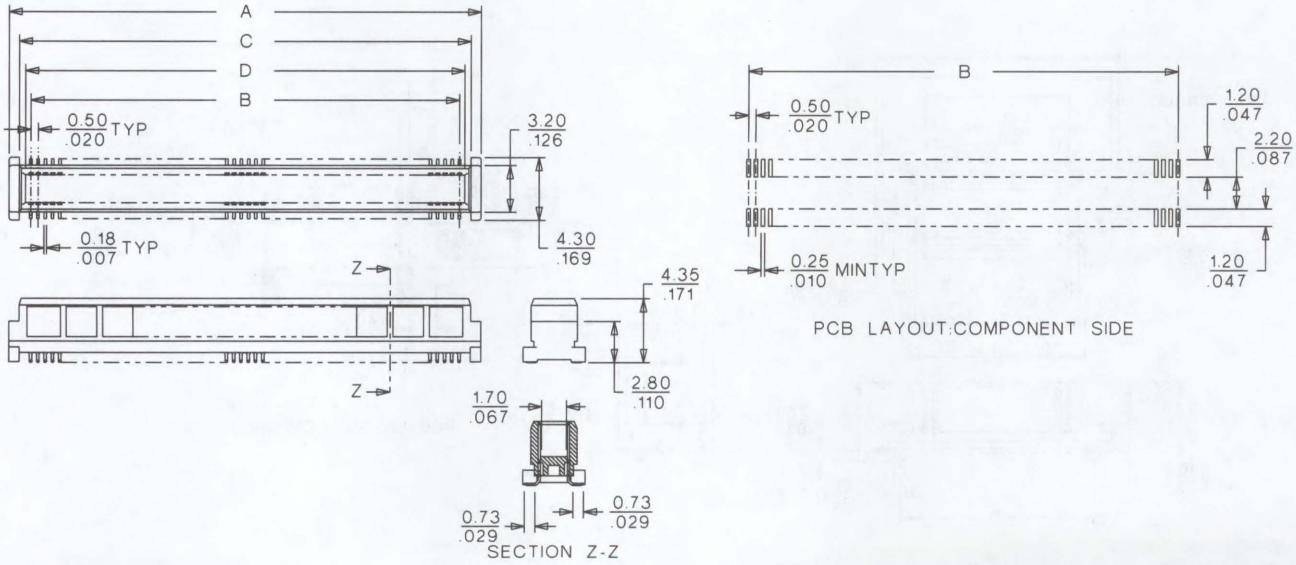

ORDERING INFORMATION AND DIMENSIONS

Circuits	Order No.	Dimension				Tape Width
		A	B	C	D	
140	55306-1408	37.50 (1.476)	34.50 (1.358)	36.10 (1.421)	35.24 (1.387)	56.00 (2.205)

0.50mm (.020") Pitch Board-to-Board Receptacle Housing

54230

SMT, Dual Row Vertical Stacking

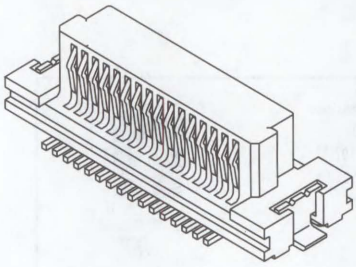

FEATURES AND SPECIFICATIONS

Features and Benefits

- Stacking height: 5.50mm (.217")
- Sizes 50, 60 and 80 circuits
- Polarized design
- Metal solder tabs provide PCB hold-down and strain relief for SMT tails
- Durable blade on beam contact interface
- Polarizing pegs assist placement

Reference Information

Packaging: Embossed
Mates With: 55055
Designed In: Millimeters

Electrical

Voltage: 60V
Current: 0.4A
Contact Resistance: 60mΩ max.
Dielectric Withstanding Voltage: 500V AC/1 min.
Insulation Resistance: 500 MΩ min.

Physical

Housing: LCP, UL 94V-0
Contact: Phosphor Bronze
Plating: Gold over half-bright Nickel
Fitting Nail: Copper Alloy, Tin/Lead over Copper Plating
Operating Temperature: -40 to +85°C

CATALOG DRAWING (FOR REFERENCE ONLY)

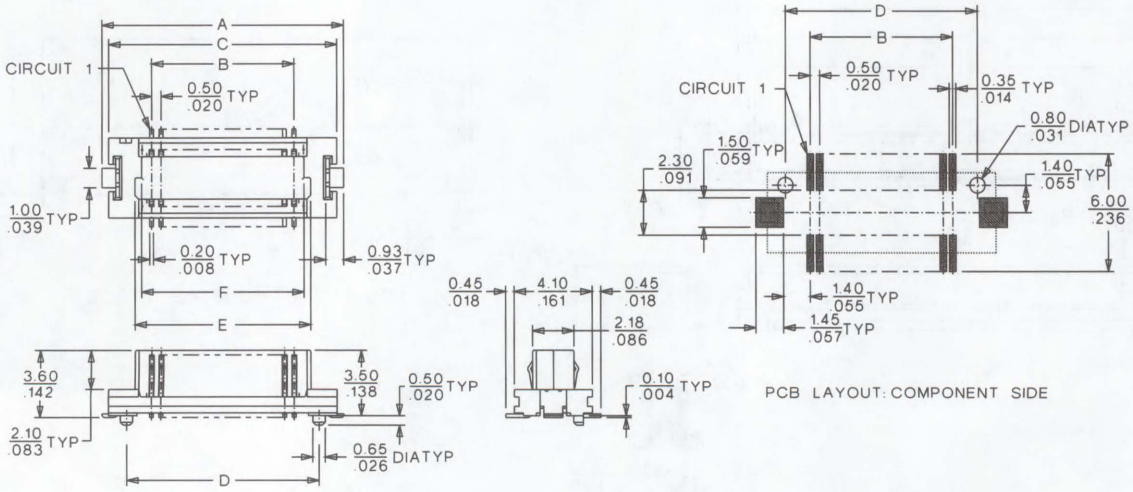

ORDERING INFORMATION AND DIMENSIONS

Circuits	Order No.	Dimension						Tape Width
		A	B	C	D	E	F	
50	54230-0508	17.20 (.677)	12.00 (.472)	16.50 (.650)	14.60 (.575)	13.75 (.541)	13.05 (.514)	32.00 (1.260)
60	54230-0608	19.70 (.776)	14.50 (.571)	19.00 (.748)	17.10 (.673)	16.25 (.640)	15.55 (.612)	
80	54230-0808	24.70 (.972)	19.50 (.768)	24.00 (.945)	22.10 (.870)	21.25 (.837)	20.55 (.809)	44.00 (1.732)

0.50mm (.020") Pitch Board-to-Board Plug

55055

SMT, Dual Row Vertical Stacking

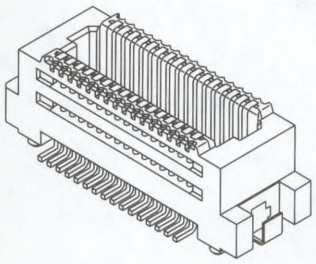

FEATURES AND SPECIFICATIONS

Features and Benefits

- Stacking height: 5.50mm (.217")
- Sizes 50, 60 and 80 circuits
- Durable blade on beam contact interface
- Polarized design
- Metal solder tabs provide PCB hold-down and strain relief for SMT tails
- Polarizing pegs assist placement

Reference Information

Packaging: Embossed
Mates With: 54230
Designed In: Millimeters

Mating Dimensions
55055/54230
H=5.50mm (.217")
W=4.1mm (.161")

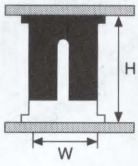

Electrical

Voltage: 60V
Current: 0.4A
Contact Resistance: 60mΩ max.
Dielectric Withstanding Voltage: 500V AC/1 min.
Insulation Resistance: 500 MΩ min.

Physical

Housing: LCP, UL 94V-0
Contact: Copper Alloy
Plating: Gold over half-bright Nickel
Fitting Nail: Copper Alloy, Tin/Lead over Copper Plating
Operating Temperature: -40 to +85°C

CATALOG DRAWING (FOR REFERENCE ONLY)

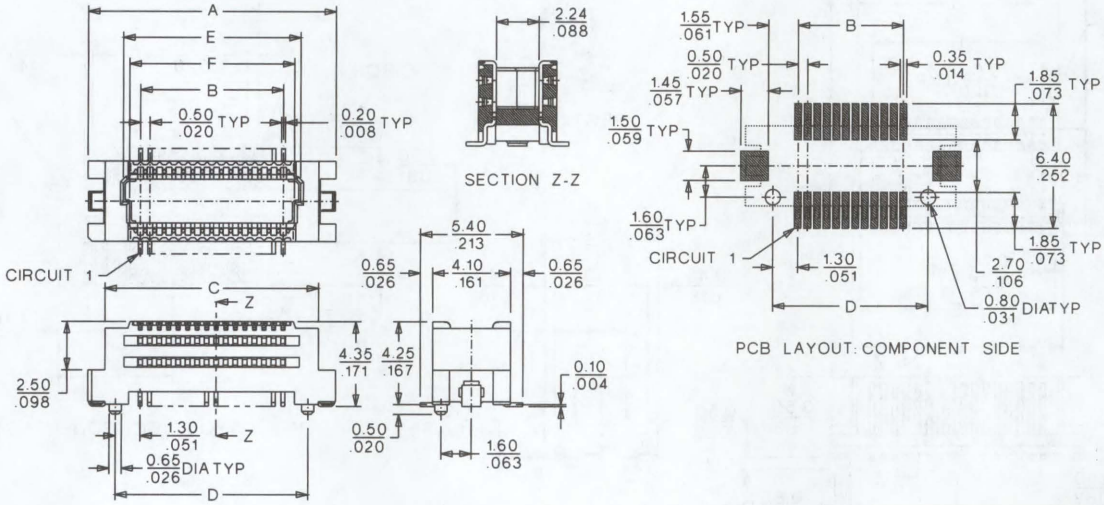

ORDERING INFORMATION AND DIMENSIONS

Circuits	Order No.	Dimension						Tape Width
		A	B	C	D	E	F	
50	55055-0508	17.50 (.689)	12.00 (.472)	15.70 (.618)	14.60 (.575)	13.80 (.543)	13.15 (.518)	32.00 (1.260)
60	55055-0608	20.00 (.787)	14.50 (.571)	18.20 (.717)	17.10 (.673)	16.30 (.642)	15.65 (.616)	
80	55055-0808	25.00 (.984)	19.50 (.768)	23.20 (.913)	22.10 (.870)	21.30 (.839)	20.65 (.813)	44.00 (1.732)

0.50mm (.020") Pitch Board-to-Board Receptacle

54124

SMT, Dual Row Vertical Stacking

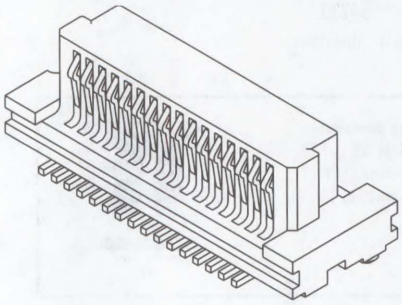

FEATURES AND SPECIFICATIONS

Features and Benefits

- Stacking height: 6.0mm
- Sizes 60 circuits
- Positioning peg assists placement
- High temperature housing
- Durable blade on beam contact interface
- Anti-flux design

Reference Information

Packaging: Embossed tape
Mates With: 53887
Designed In: Millimeters

Electrical

Voltage: 50V
Current: 0.4A
Contact Resistance: 80mΩ max.
Dielectric Withstanding Voltage: 500V AC
Insulation Resistance: 500 MΩ min.

Physical

Housing: White glass-filled LCP, UL 94V-0
Contact: Phosphor Bronze
Plating: Gold over Nickel
Operating Temperature: -40 to +85°C

CATALOG DRAWING (FOR REFERENCE ONLY)

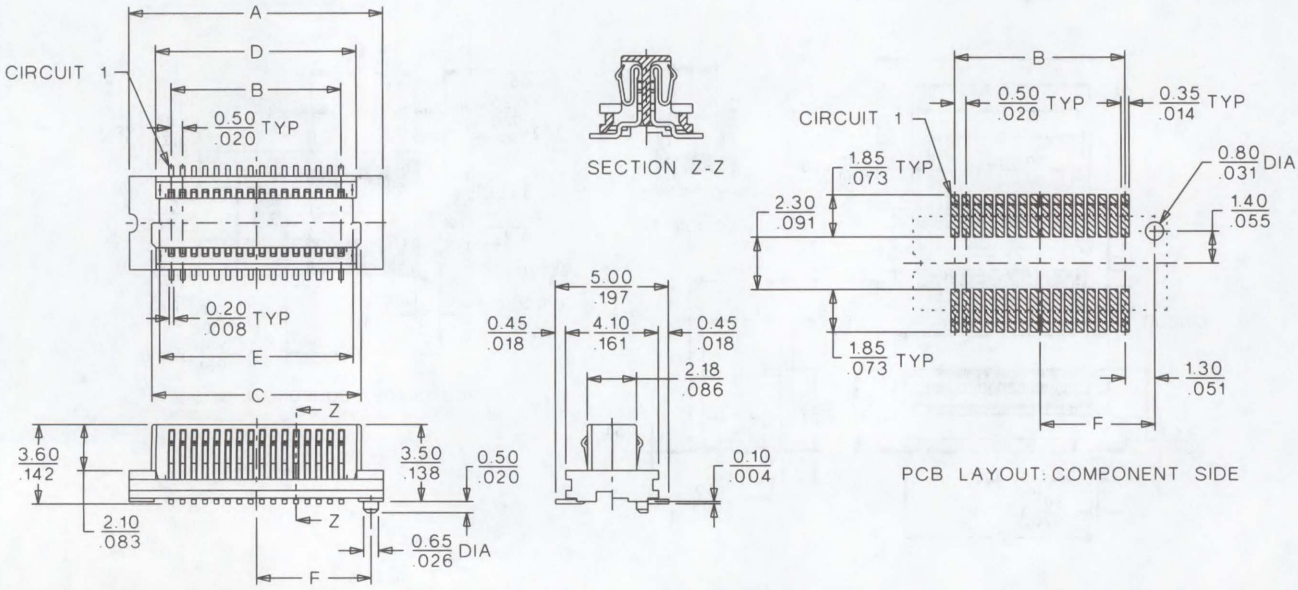

ORDERING INFORMATION AND DIMENSIONS

Circuits	Order No.	Dimension						Carrier Tape Width
		A	B	C	D	E	F	
60	54124-0608	18.20 (.716)	14.50 (.570)	16.25 (.639)	15.85 (.624)	15.55 (.612)	8.55 (.336)	24.00 (.945)

Note: Contact Molex for embossed tape specifications

Note: Use only one connector per daughterboard in order to insure proper mating alignment

0.50mm (.020") Pitch Board-to-Board Plug

53887

SMT, Dual Row Vertical Stacking

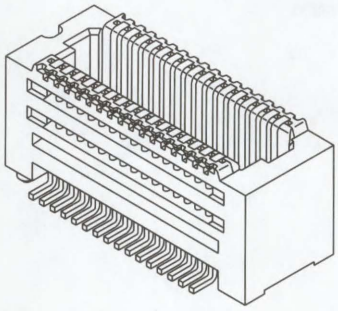

FEATURES AND SPECIFICATIONS

Features and Benefits

- Stacking height: 6.0mm
- Sizes 60 circuits
- Positioning peg assists placement
- High temperature housing
- Durable blade on beam contact interface
- Anti-flux design

Reference Information

Packaging: Embossed tape
Mates With: 54124
Designed In: Millimeters

Mating Dimensions
53887 • 54124
H=6.0mm W=4.1mm

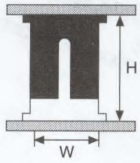

Electrical

Voltage: 50V
Current: 0.4A
Contact Resistance: 80mΩ max.
Dielectric Withstanding Voltage: 500V AC
Insulation Resistance: 500 MΩ min.

Physical

Housing: White glass-filled LCP, UL 94V-0
Contact: Magnesium Alloy
Plating: Gold over Nickel
Operating Temperature: -40 to +85°C

CATALOG DRAWING (FOR REFERENCE ONLY)

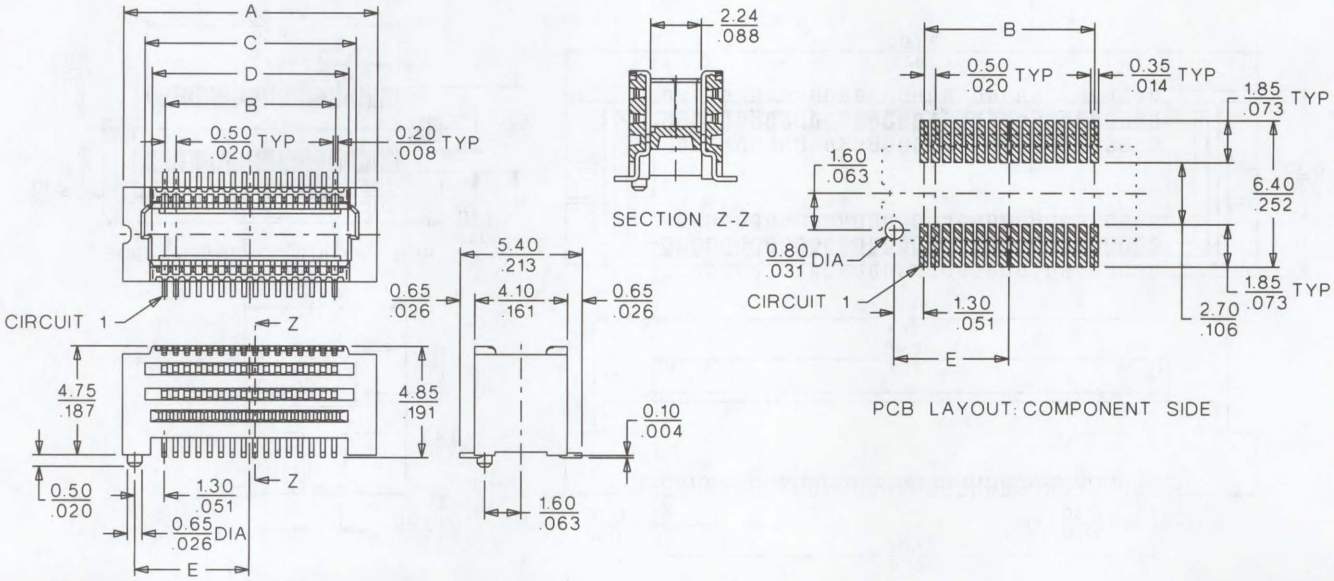

ORDERING INFORMATION AND DIMENSIONS

Circuits	Order No.	Dimension					Carrier Tape Width
		A	B	C	D	E	
60	53887-0608	18.20 (.716)	14.50 (.570)	16.30 (.641)	15.65 (.616)	8.55 (.336)	32.00 (1.260)

Note: Contact Molex for embossed tape specifications

Note: Use only one connector per daughterboard in order to insure proper mating alignment

0.50mm (.020") Pitch Board-to-Board Receptacle

87577

SMT

FEATURES AND SPECIFICATIONS

Features and Benefits

- 7.00mm (.276") mated height
- Open flat area for robotic pick-and-place
- SMT mounting
- High temperature housing material
- Metal solder tabs for additional PCB retention

Reference Information

Product Specification: PS-87577-001
Packaging: Embossed tape and reel
Mates With: 87579-0111
Designed In: Millimeters

Electrical

Voltage: 50V
Current: 0.5A min.
Contact Resistance: 50mΩ max.
Dielectric Withstanding Voltage: 500V AC
Insulation Resistance: 1000 MΩ min.

Physical

Housing: Black, Glass-filled LCP, UL 94V-0
Contact: Copper Alloy
Plating: Selective Gold
Operating Temperature: -10 to +55°C

CATALOG DRAWING (FOR REFERENCE ONLY)

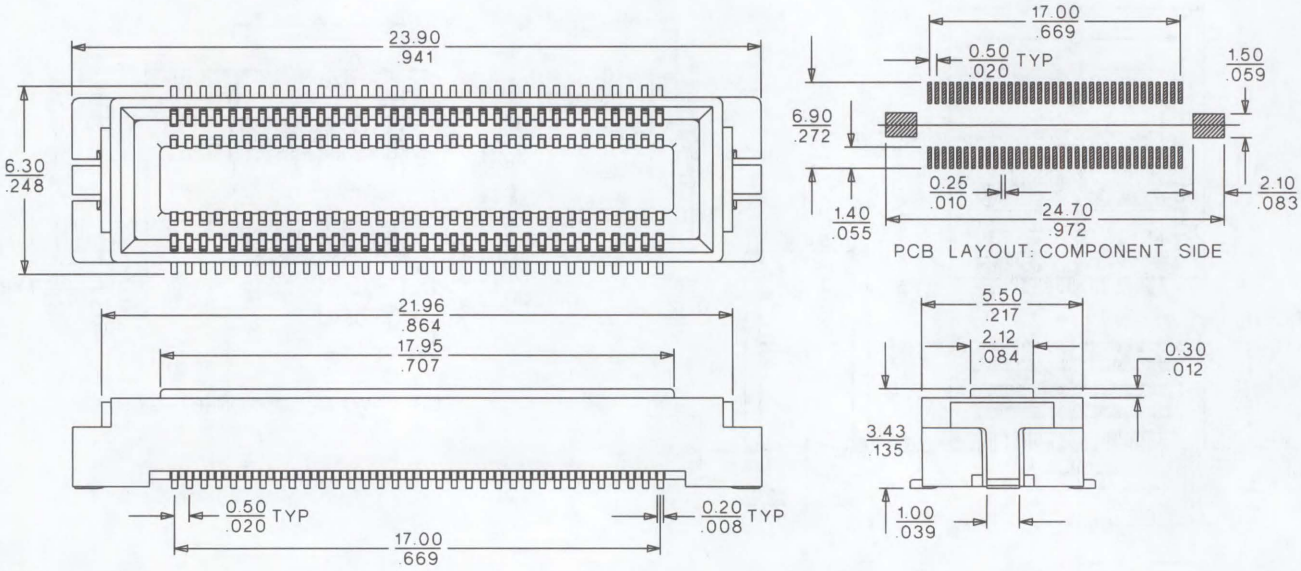

ORDERING INFORMATION

Circuits	Order No.
70	87577-0111

0.50mm (.020") Pitch Board-to-Board Plug

87579

SMT

FEATURES AND SPECIFICATIONS

Features and Benefits

- 7.00mm (.276") mated height
- Insert molded plug offers superior terminal retention
- SMT mounting
- High temperature housing material
- Metal solder tabs for additional PCB retention

Reference Information

Product Specification: PS-87577-001
Packaging: Embossed tape and reel
Mates With: 87577-0111
Designed In: Millimeters

Electrical

Voltage: 50V
Current: 0.5A min.
Contact Resistance: 50mΩ max.
Dielectric Withstanding Voltage: 500V AC
Insulation Resistance: 1000 MΩ min.

Physical

Housing: Black, Glass-filled LCP, UL 94V-0
Contact: Copper Alloy
Plating: Selective Gold
Operating Temperature: -10 to +55°C

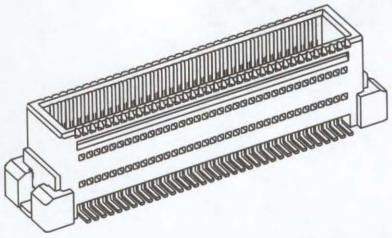

Mating Dimensions
87579 • 87577
H=7.00mm (.276")
W=5.50mm (.217")

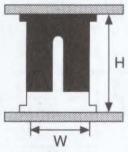

CATALOG DRAWING (FOR REFERENCE ONLY)

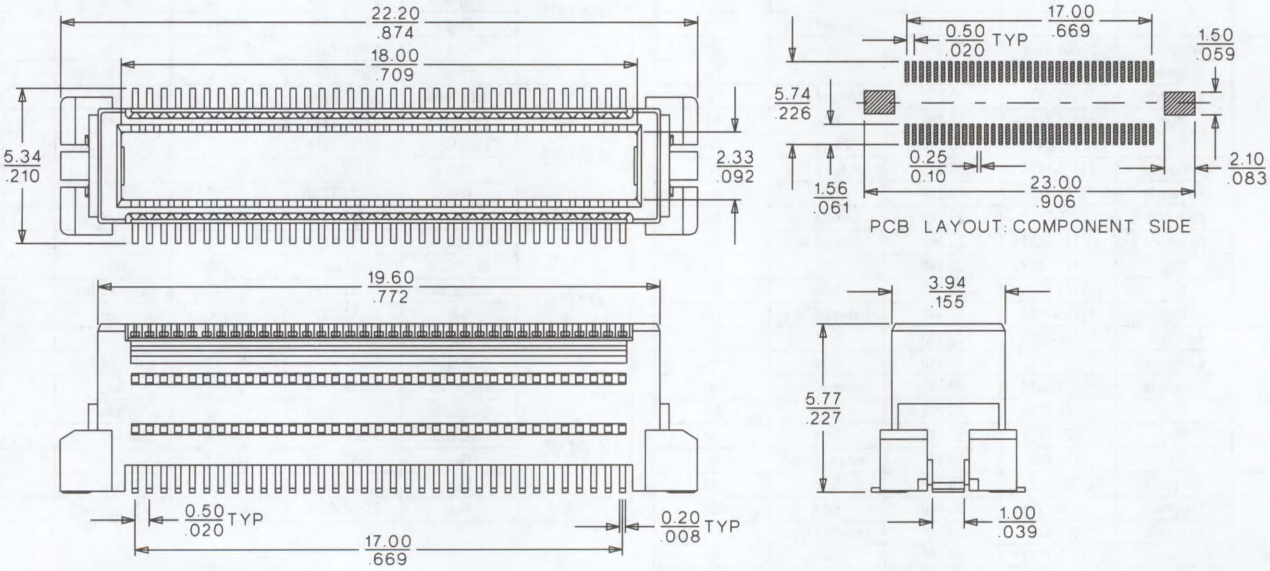

ORDERING INFORMATION AND DIMENSIONS

Circuits	Order No.
70	87579-0111

CONTACT DESIGN—0.635mm (.025") SYSTEM SHOWN

Easy mating/Low force

- Gold over Nickel plating
- Excellent electrical performance
- Tested and field proven

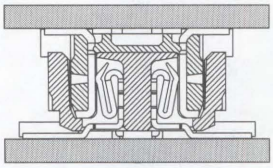

0.635mm (.025") Pitch SMT Stacking Board-to-Board Connectors Product Overview

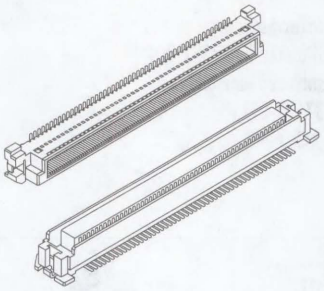

Stacking Height	Mating Types	Order No.	Circuits	Packaging	Vacuum Cover
3.00 (.118)	Receptacle	52921-XXX9	30-140	Tube	No
	Receptacle	52921-XXX4	30-140	Embossed Tape	Yes
	Plug	53671-XXX9	30-140	Tube	No
	Plug	53671-XXX4	30-140	Embossed Tape	Yes
4.00 (.157)	Receptacle	52851-XXX9	70/150	Tube	No
	Receptacle	52883-XXX5	70/150	Tube	Yes
	Receptacle	52883-XXX4	70/150	Embossed Tape	Yes
	Plug	53569-XXX9	70/150	Tube	No
	Plug	53623-XXX5	70/150	Tube	Yes
	Plug	53623-XXX4	70/150	Embossed Tape	Yes
5.00 (.197)	Receptacle	52760-XXX9	20-240	Tube	No
	Receptacle	52885-XXX5	20-240	Tube	Yes
	Receptacle	52885-XXX4	20-240	Embossed Tape	Yes
	Plug	53475-XXX9	20-240	Tube	No
	Plug	53643-XXX5	20-240	Tube	Yes
	Plug	53643-XXX4	20-240	Embossed Tape	Yes
6.00 (.236)	Receptacle	52760-XXX9	20-240	Tube	No
	Receptacle	52855-XXX5	20-240	Tube	Yes
	Receptacle	52855-XXX4	20-240	Embossed Tape	Yes
	Plug	53467-XXX9	20-240	Tube	No
	Plug	53645-XXX5	20-240	Tube	Yes
	Plug	53645-XXX4	20-240	Embossed Tape	Yes
7.00 (.276)	Receptacle	52760-XXX9	20-240	Tube	No
	Receptacle	52855-XXX5	20-240	Tube	Yes
	Receptacle	52855-XXX4	20-240	Embossed Tape	Yes
	Plug	53481-XXX9	20-240	Tube	No
	Plug	53625-XXX5	20-240	Tube	Yes
	Plug	53625-XXX4	20-240	Embossed Tape	Yes
8.00 (.315)	Receptacle	52760-XXX9	20-240	Tube	No
	Receptacle	52855-XXX5	20-240	Tube	Yes
	Receptacle	52855-XXX4	20-240	Embossed Tape	Yes
	Plug	53551-XXX9	40-140	Tube	No
	Plug	53647-XXX5	40-140	Tube	Yes
	Plug	53647-XXX4	40-140	Embossed Tape	Yes
10.00 (.394)	Receptacle	52760-XXX9	20-240	Tube	No
	Receptacle	52855-XXX5	20-240	Tube	Yes
	Receptacle	52855-XXX4	20-240	Embossed Tape	Yes
	Plug	53553-XXX9	40-140	Tube	No
	Plug	53627-XXX5	40-140	Tube	Yes
	Plug	53627-XXX4	40-140	Embossed Tape	Yes

Stacking Height	Mating Types	Order No.	Circuits	Packaging	Vacuum Cover
11.00 (.433)	Receptacle	52837-XXX9	20-140	Tube	No
	Receptacle	52901-XXX5	20-140	Tube	Yes
	Receptacle	52901-XXX4	20-140	Embossed Tape	Yes
	Plug	53475-XXX9	20-240	Tube	No
	Plug	53643-XXX5	20-240	Tube	Yes
	Plug	53643-XXX4	20-240	Embossed Tape	Yes
12.00 (.472)	Receptacle	52837-XXX9	20-140	Tube	No
	Receptacle	52901-XXX5	20-140	Tube	Yes
	Receptacle	52901-XXX4	20-140	Embossed Tape	Yes
	Plug	53467-XXX9	20-240	Tube	No
	Plug	53645-XXX5	20-240	Tube	Yes
	Plug	53645-XXX4	20-240	Embossed Tape	Yes
13.00 (.512)	Receptacle	52837-XXX9	20-140	Tube	No
	Receptacle	52901-XXX5	20-140	Tube	Yes
	Receptacle	52901-XXX4	20-140	Embossed Tape	Yes
	Plug	53481-XXX9	20-240	Tube	No
	Plug	53625-XXX5	20-240	Tube	Yes
	Plug	53625-XXX4	20-240	Embossed Tape	Yes
14.00 (.551)	Receptacle	52837-XXX9	20-140	Tube	No
	Receptacle	52901-XXX5	20-140	Tube	Yes
	Receptacle	52901-XXX4	20-140	Embossed Tape	Yes
	Plug	53551-XXX9	40-140	Tube	No
	Plug	53647-XXX5	40-140	Tube	Yes
	Plug	53647-XXX4	40-140	Embossed Tape	Yes
16.00 (.630)	Receptacle	52837-XXX9	20-140	Tube	No
	Receptacle	52901-XXX5	20-140	Tube	Yes
	Receptacle	52901-XXX4	20-140	Embossed Tape	Yes
	Plug	53553-XXX9	40-140	Tube	No
	Plug	53627-XXX5	40-140	Tube	Yes
	Plug	53627-XXX4	40-140	Embossed Tape	Yes

0.635mm (.025") STACKING HEIGHT OVERVIEW

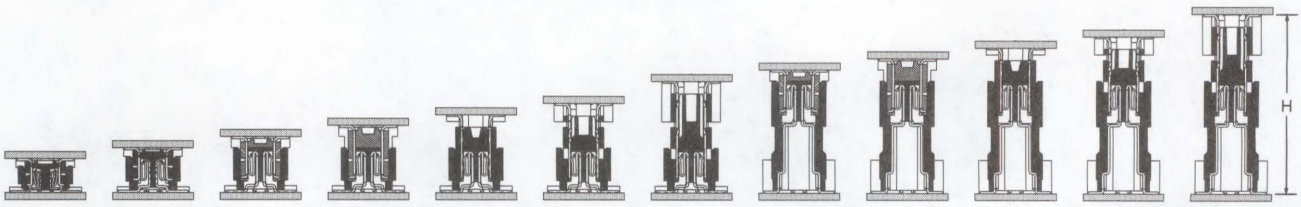

Stacking Height	3.00 (.118)	4.00 (.157)	5.00 (.197)	6.00 (.236)	7.00 (.276)	8.00 (.315)	10.00 (.394)	11.00 (.433)	12.00 (.472)	13.00 (.512)	14.00 (.551)	16.00 (.630)
Receptacle	52921	52851	52760	52760	52760	52760	52760	52837	52837	52837	52837	52837
Plug	53671	53569	53475	53467	53481	53551	53553	53475	53467	53481	53551	53553

0.635mm (.025") Pitch Board-to-Board Receptacle

52921

SMT, Dual Row Vertical Stacking

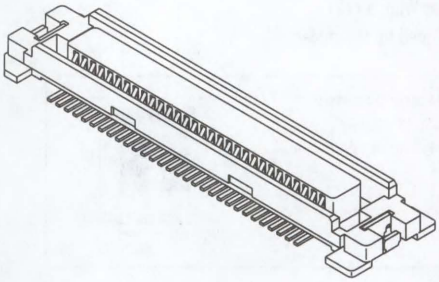

FEATURES AND SPECIFICATIONS

Features and Benefits

- Stacking height: 3.0mm
- Sizes 30, 60, 80 and 140 circuits
- Housing lock on 30 and 60 circuits
- Anti-flux design
- Metal solder tabs provide PCB hold down and strain relief for SMT tails
- Polarizing pegs assist placement

Reference Information

Packaging: Tube and embossed tape
Mates With: 53671
Designed In: Millimeters

Electrical

Voltage: 100V
Current: 0.5A
Contact Resistance: 40mΩ max.
Dielectric Withstanding Voltage: 250V AC
Insulation Resistance: 1000 MΩ min.

Physical

Housing: White glass-filled LCP, UL 94V-0
Contact: Copper Alloy
Plating: Gold over Nickel
Operating Temperature: -55 to +85°C

CATALOG DRAWING (FOR REFERENCE ONLY)

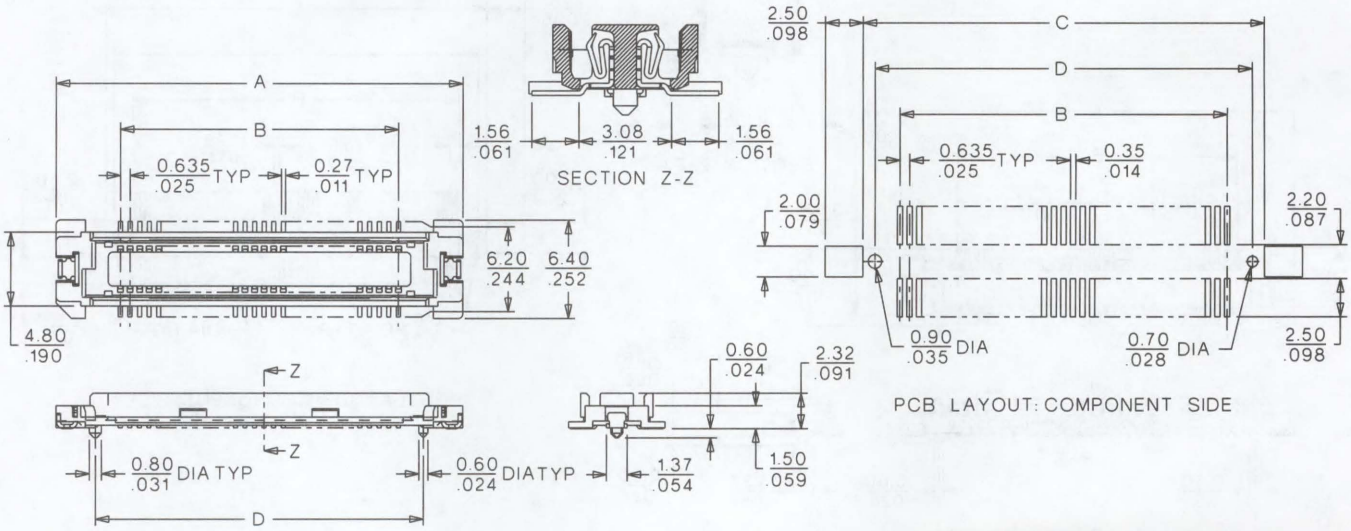

ORDERING INFORMATION AND DIMENSIONS

Circuits	Order No.		Dimension			
	Tube	Embossed Tape with Cover	A	B	C	D
30	52921-0309	52921-0304	17.40 (.685)	8.890 (.350)	13.80 (.543)	12.20 (.480)
60	52921-0609	52921-0604	26.92 (1.059)	18.42 (.725)	23.32 (.918)	21.72 (.855)
80		52921-0804	33.27 (1.310)	24.77 (.975)	29.67 (1.168)	28.07 (1.105)
140	52921-1409		52.32 (2.059)	43.82 (1.725)	48.72 (1.918)	47.12 (1.855)

Note: Use only one connector per daughterboard in order to insure proper mating alignment
Note: Contact Molex for embossed tape specifications

0.635mm (.025") Pitch Board-to-Board Plug

53671

SMT, Dual Row Vertical Stacking

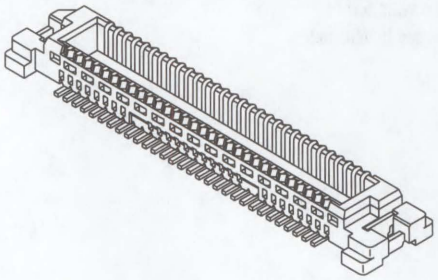

FEATURES AND SPECIFICATIONS

Features and Benefits

- Stacking height: 3.0mm
- Sizes 30, 60, 80 and 140 circuits
- Housing lock on 30 and 60 circuits
- Anti-flux design
- Metal solder tabs provide PCB hold down and strain relief for SMT tails
- Polarizing pegs assist placement

Reference Information

Packaging: Tube and embossed tape
Mates With: 52921
Designed In: Millimeters

Mating Dimensions
53671 • 52921
H=3.0mm W=6.4mm

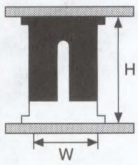

Electrical

Voltage: 100V
Current: 0.5A
Contact Resistance: 40mΩ max.
Dielectric Withstanding Voltage: 250V AC
Insulation Resistance: 1000 MΩ min.

Physical

Housing: White glass-filled LCP, UL 94V-0
Contact: Copper Alloy
Plating: Gold over Nickel
Operating Temperature: -55 to +85°C

CATALOG DRAWING (FOR REFERENCE ONLY)

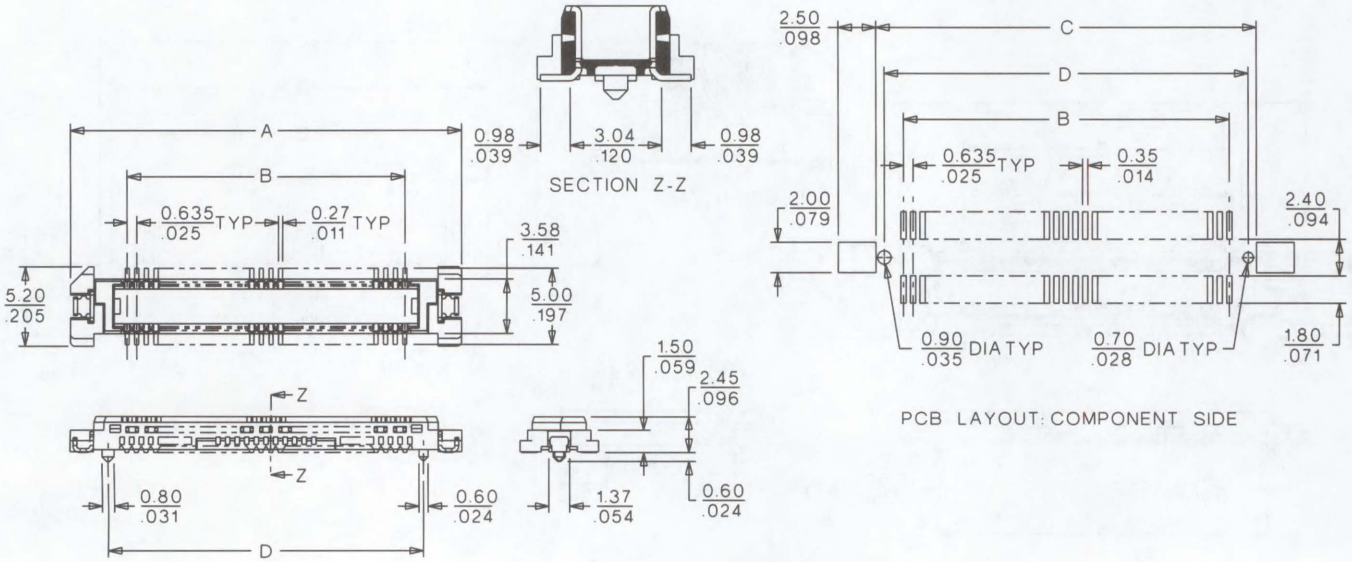

ORDERING INFORMATION AND DIMENSIONS

Circuits	Order No.		Dimension			
	Tube	Embossed Tape with Cover	A	B	C	D
30	53671-0309	53671-0304	16.40 (.645)	8.890 (.350)	12.50 (.492)	11.40 (.448)
40	53671-0409		19.57 (.770)	12.07 (.475)	15.67 (.617)	14.57 (.574)
60	53671-0609	53671-0604	25.92 (1.020)	18.42 (.725)	22.02 (.866)	20.92 (.823)
80		53671-0804	32.27 (1.270)	24.77 (.975)	28.37 (1.117)	27.27 (1.074)
140	53671-1409		51.32 (2.020)	43.82 (1.725)	47.42 (1.866)	46.32 (1.823)

Note: Use only one connector per daughterboard in order to insure proper mating alignment
Note: Contact Molex for embossed tape specifications

0.635mm (.025") Pitch Board-to-Board Receptacle

52851/52883

SMT, Dual Row Vertical Stacking

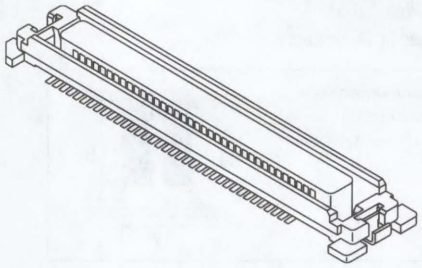

FEATURES AND SPECIFICATIONS

Features and Benefits

- Stacking height: 4.0mm
- Sizes 20 to 160 circuits
- Housing lock on 40 to 70 circuits
- Anti-flux design
- Metal solder tabs provide PCB hold down and strain relief for SMT tails
- Polarizing pegs assist placement

Reference Information

Packaging: Tube and embossed tape
Mates With: 53569
Designed In: Millimeters

Electrical

Voltage: 100V
Current: 0.5A
Contact Resistance: 40mΩ max.
Dielectric Withstanding Voltage: 250V AC
Insulation Resistance: 1000 MΩ min.

Physical

Housing: White glass-filled LCP, UL 94V-0
Contact: Copper Alloy
Plating: Gold over Nickel
Operating Temperature: -55 to +85°C

CATALOG DRAWING (FOR REFERENCE ONLY)

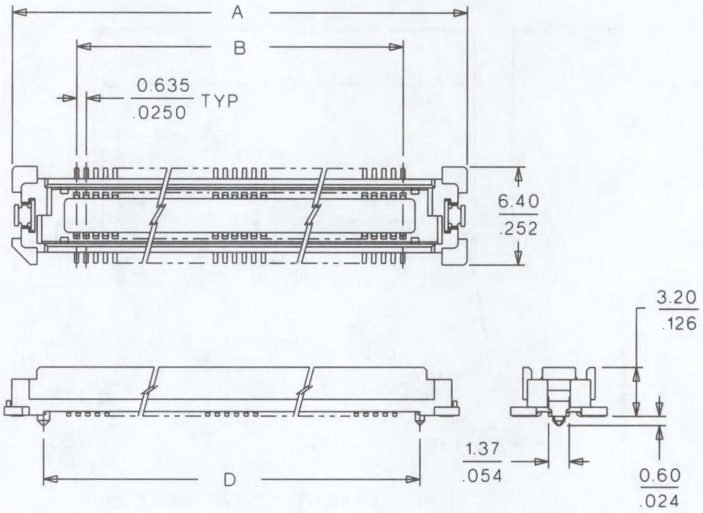

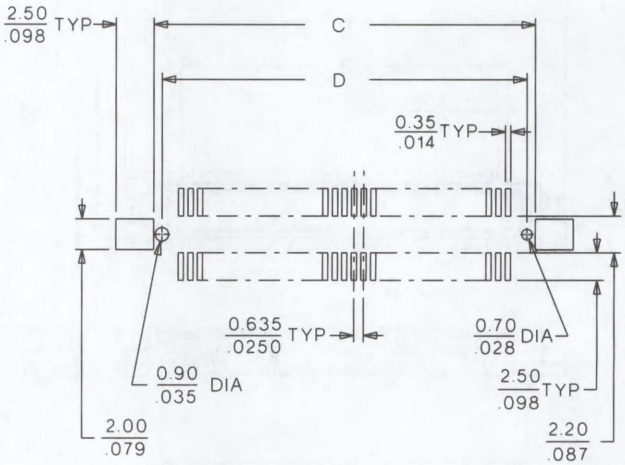

PCB LAYOUT : COMPONENT SIDE

ORDERING INFORMATION AND DIMENSIONS

Circuits	Order No.			Dimension			
	Tube	Tube with cover	Embossed Tape with Cover	A	B	C	D
20			52883-0204	14.22 (.560)	5.72 (.225)	10.62 (.418)	9.02 (.355)
40			52883-0404	20.57 (.810)	12.07 (.475)	16.97 (.668)	15.37 (.605)
50		52883-0505	52883-0504	23.75 (.935)	15.24 (.600)	20.15 (.793)	18.55 (.730)
70	52851-0709	52883-0705	52883-0704	30.10 (1.185)	21.59 (.850)	26.50 (1.043)	24.90 (.980)
80		52883-0805	52883-0804	33.27 (1.310)	24.77 (.975)	29.67 (1.168)	28.07 (1.105)
100		52883-1005	52883-1004	39.62 (1.560)	31.12 (1.225)	36.02 (1.418)	34.42 (1.355)
140	52851-1409	52883-1405		52.32 (2.060)	43.82 (1.725)	48.72 (1.918)	47.12 (1.855)
150	52851-1509			55.49 (2.185)	46.99 (1.850)	51.89 (2.043)	50.29 (1.979)
160		52883-1605		58.67 (2.310)	20.17 (.794)	55.07 (2.168)	53.47 (2.105)

Note: Use only one connector per daughterboard in order to insure proper mating alignment
Note: Contact Molex for embossed tape specifications

0.635mm (.025") Pitch Board-to-Board Plug

53569/53623

SMT, Dual Row Vertical Stacking

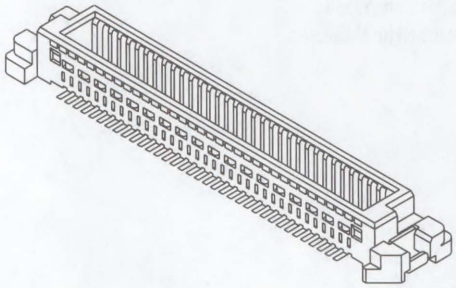

FEATURES AND SPECIFICATIONS

Features and Benefits

- Stacking height: 4.0mm
- Sizes 40 to 150 circuits
- Housing lock on 40 to 70 circuits
- Anti-flux design
- Metal solder tabs provide PCB hold down and strain relief for SMT tails
- Polarizing pegs assist placement

Reference Information

Packaging: Tube and embossed tape
Mates With: 52851
Designed In: Millimeters

Mating Dimensions
53569 • 52851
H=4.0mm W=6.4mm

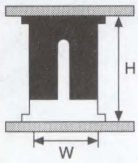

Electrical

Voltage: 100V
Current: 0.5A
Contact Resistance: 40mΩ max.
Dielectric Withstanding Voltage: 250V AC
Insulation Resistance: 1000 MΩ min.

Physical

Housing: White glass-filled LCP, UL 94V-0
Contact: Copper Alloy
Plating: Gold over Nickel
Operating Temperature: -55 to +85°C

CATALOG DRAWING (FOR REFERENCE ONLY)

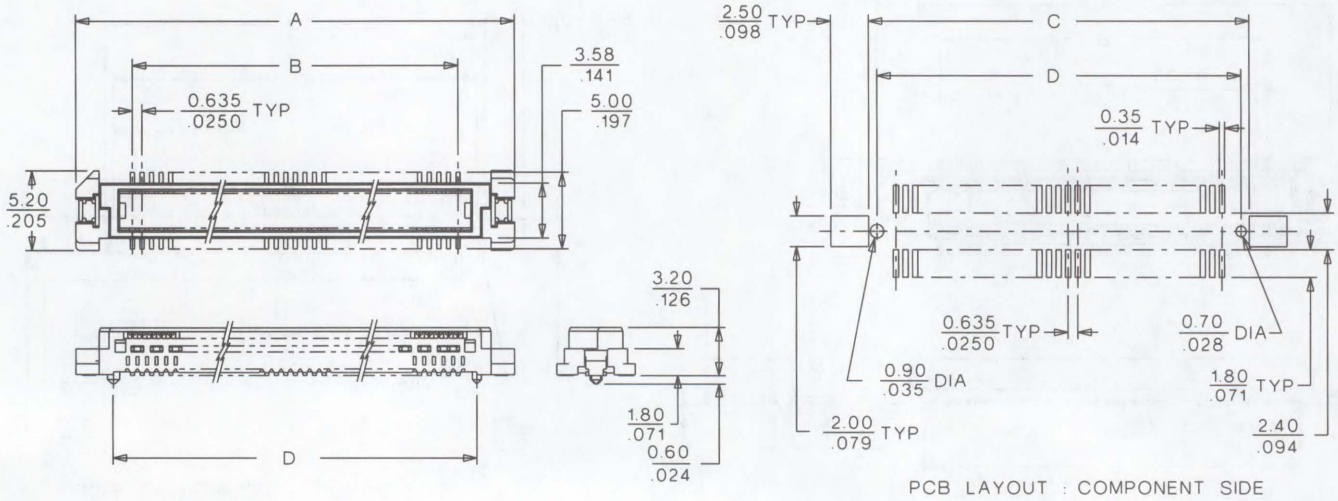

ORDERING INFORMATION AND DIMENSIONS

Circuits	Order No. (Tube)	Order No. (Tube w/cover)	Order No. (Embossed Tape with Cover)	Dimension			
				A	B	C	D
40		53623-0405	53623-0404	19.57 (.770)	12.065 (.475)	15.67 (.617)	14.57 (.574)
50		53623-0505	53623-0504	22.75 (.896)	15.24 (.600)	18.85 (.742)	17.75 (.699)
70	53569-0709	53623-0705	53623-0704	29.10 (1.145)	21.59 (.850)	25.20 (.992)	24.10 (.948)
80		53623-0805	53623-0804	32.27 (1.270)	24.765 (.975)	28.37 (1.117)	27.27 (1.074)
100		53623-1005	53623-1004	38.62 (1.520)	31.115 ((1.225)	34.72 (1.367)	33.62 (1.324)
140		53623-1405		51.32 (2.020)	43.815 (1.725)	47.42 (1.867)	46.32 (1.824)
150	53569-1509			54.49 (2.145)	46.99 (1.850)	50.59 (1.991)	49.49 (1.948)

Note: Use only one connector per daughterboard in order to insure proper mating alignment
Note: Contact Molex for embossed tape specifications

0.635mm (.025") Pitch Board-to-Board Receptacle

52760/52885

SMT, Dual Row Vertical Stacking

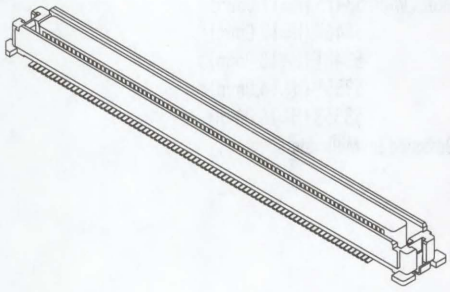

FEATURES AND SPECIFICATIONS

Features and Benefits

- Stacking height: 5.0 to 8.0 and 10mm
- Sizes 20 to 240 circuits
- Housing lock on 20 to 70 circuits
- Anti-flux design
- Metal solder tabs provide PCB hold down and strain relief for SMT tails
- Polarizing pegs assist placement

Reference Information

Packaging: Tube and embossed tape
Mates With: 53475 (H=5.0mm)
53467 (H=6.0mm)
53481 (H=7.0mm)
53551 (H=8.0mm)
53553 (H=10.0mm)
Designed In: Millimeters

Electrical

Voltage: 100V
Current: 0.5A
Contact Resistance: 40mΩ max. (H=5.0 to 7.0mm)
50mΩ max. (H=8.0, 10.0mm)
Dielectric Withstanding Voltage: 250V AC
Insulation Resistance: 1000 MΩ min.

Physical

Housing: White glass-filled LCP, UL 94V-0
Contact: Copper Alloy
Plating: Gold over Nickel
Operating Temperature: -55 to +85°C

CATALOG DRAWING (FOR REFERENCE ONLY)

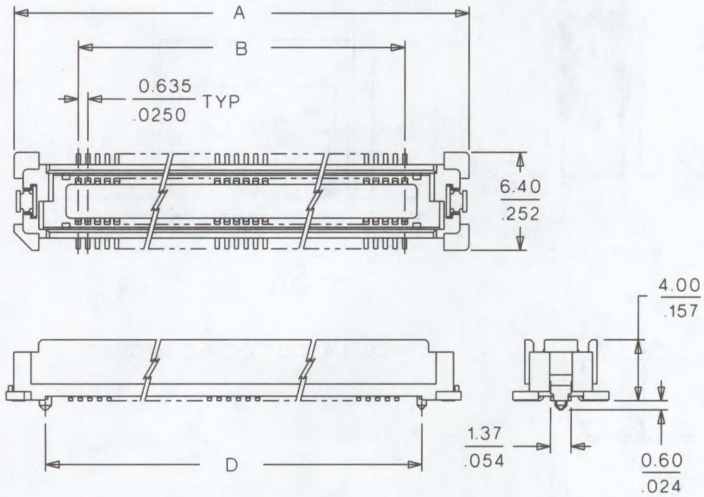

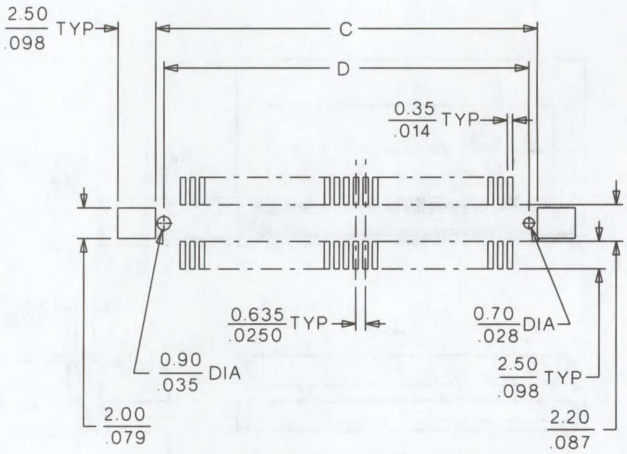

PCB LAYOUT: COMPONENT SIDE

ORDERING INFORMATION AND DIMENSIONS

Circuits	Order No.			Dimension			
	Tube	Tube with Cover	Embossed Tape with Cover	A	B	C	D
20	52760-0209	52885-0205	52885-0204	14.22 (.559)	5.71 (.225)	10.62 (.418)	9.02 (.355)
30	52760-0309		52885-0304	17.40 (.685)	8.89 (.350)	13.80 (.543)	12.20 (.480)
40	52760-0409		52885-0404	20.57 (.809)	12.06 (.475)	16.97 (.668)	15.37 (.605)
50	52760-0509	52885-0505	52885-0504	23.75 (.935)	15.24 (.600)	20.15 (.793)	18.55 (.730)
60	52760-0609	52885-0605	52885-0604	26.92 (1.059)	18.41 (.725)	23.32 (.918)	21.72 (.855)
68	52760-0689			29.46 (1.159)	20.99 (.827)	25.86 (1.018)	24.26 (.955)
70	52760-0709	52885-0705	52885-0704	30.10 (1.185)	21.59 (.850)	26.50 (1.043)	24.90 (.980)
80	52760-0809		52885-0804	33.27 (1.309)	24.76 (.975)	29.67 (1.168)	28.07 (1.105)
90	52760-0909	52885-0905	52885-0904	36.45 (1.435)	27.94 (1.100)	32.85 (1.293)	31.25 (1.230)
100	52760-1009	52885-1005	52885-1004	39.62 (1.559)	31.11 (1.225)	36.02 (1.418)	34.42 (1.355)
120	52760-1209	52885-1205	52885-1204	45.97 (1.809)	37.46 (1.475)	42.37 (1.668)	40.77 (1.605)
140	52760-1409	52885-1405		52.32 (2.059)	43.81 (1.725)	48.72 (1.918)	47.12 (1.855)
160	52760-1609	52885-1605	52885-1604	58.67 (2.309)	50.16 (1.975)	55.07 (2.168)	53.47 (2.105)
180	52760-1809			65.02 (2.559)	56.51 (2.225)	61.42 (2.418)	59.82 (2.355)
200	52760-2009			71.37 (2.809)	62.86 (2.475)	67.77 (2.668)	66.17 (2.605)
240	52760-2409			84.07 (3.309)	75.56 (2.975)	80.47 (3.168)	78.87 (3.105)

Note: Use only one connector per daughterboard in order to insure proper mating alignment
Note: Contact Molex for embossed tape specifications

0.635mm (.025") Pitch Board-to-Board Receptacle

52837/52901

SMT, Dual Row Vertical Stacking

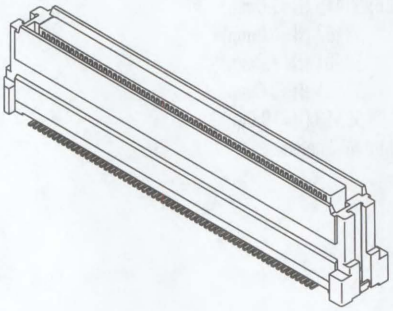

FEATURES AND SPECIFICATIONS

Features and Benefits

- Stacking height: 11.0 to14.0 and 16.0mm
- Sizes 20 to 140 circuits
- Housing lock on 20 to 70 circuits
- Anti-flux design
- Metal solder tabs provide PCB hold down and strain relief for SMT tails
- Polarizing pegs assist placement

Reference Information

Packaging: Tube and embossed tape
Mates With: 53475 (H=11.0mm)
53467 (H=12.0mm)
53481 (H=13.0mm)
53551 (H=14.0mm)
53553 (H=16.0mm)
Designed In: Millimeters

Electrical

Voltage: 100V
Current: 0.5A
Contact Resistance: 60mΩ max. (H=11.0, 12.0, 13.0mm)
70mΩ max. (H=14.0, 16.0mm)
Dielectric Withstanding Voltage: 250V AC
Insulation Resistance: 1000 MΩ min.

Physical

Housing: White glass-filled LCP, UL 94V-0
Contact: Phosphor Bronze
Plating: Gold over Nickel
Operating Temperature: -55 to +85°C

CATALOG DRAWING (FOR REFERENCE ONLY)

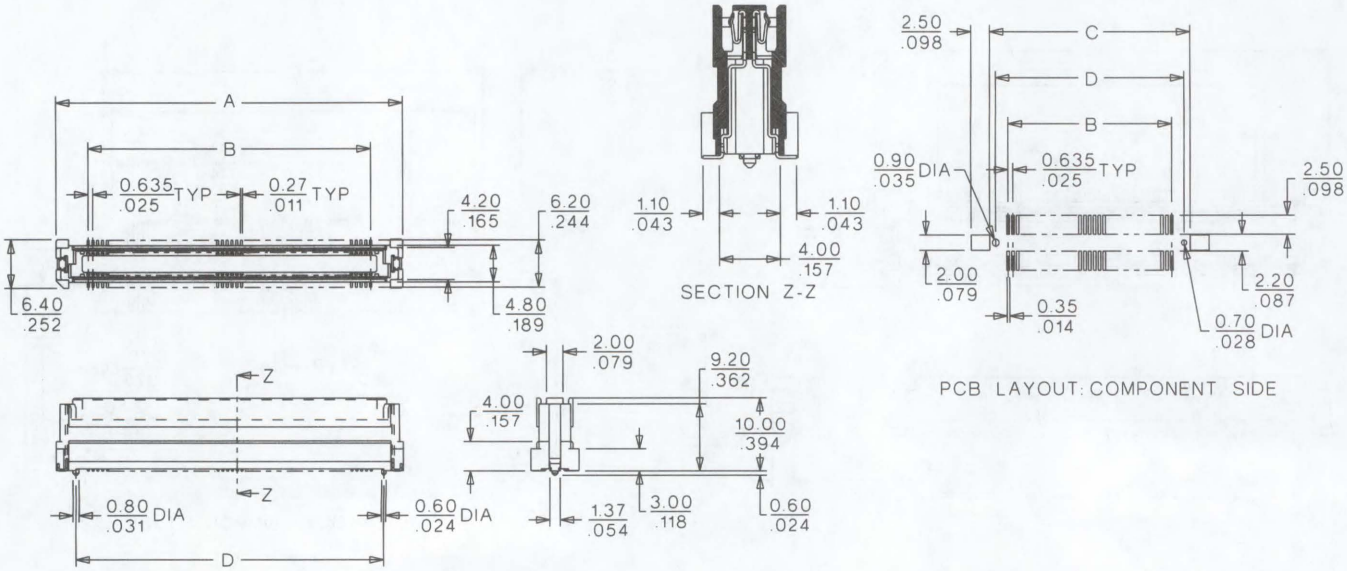

ORDERING INFORMATION AND DIMENSIONS

Circuits	Order No.			Dimension			
	Tube	Tube with Cover	Embossed Tape with Cover	A	B	C	D
20	52837-0209		52901-0204	14.22 (.559)	5.715 (.220)	10.62 (.418)	9.02 (.355)
40	52837-0409		52901-0404	20.57 (.809)	12.065 (.470)	16.97 (.668)	15.37 (.605)
60	52837-0609		52901-0604	26.92 (1.059)	18.415 (.720)	23.32 (.918)	21.72 (.855)
70			52901-0704	30.10 (1.185)	21.59 (.850)	26.50 (1.043)	24.90 (.980)
80	52837-0809		52901-0804	33.27 (1.310)	24.765 (.975)	29.67 (1.168)	28.07 (1.105)
90			52901-0904	36.45 (1.435)	27.94 (1.100)	32.85 (1.293)	31.25 (1.230)
120	52837-1209	52901-1205		45.97 (1.809)	37.465 (1.475)	42.37 (1.668)	40.77 (1.605)
140	52837-1409			52.32 (2.059)	43.815 (1.725)	48.72 (1.918)	47.12 (1.855)

Note: Use only one connector per daughterboard in order to insure proper mating alignment
Note: Contact Molex for embossed tape specifications

0.635mm (.025") Pitch Board-to-Board Plug

53475/53643

SMT, Dual Row Vertical Stacking

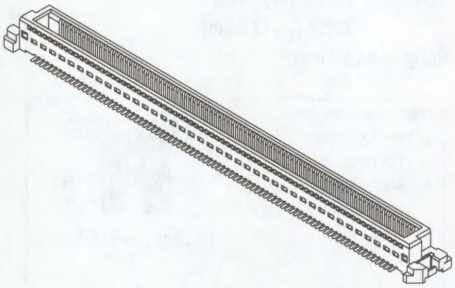

FEATURES AND SPECIFICATIONS

Features and Benefits

- Stacking height: 5.0 and 11.0mm
- Sizes 20 to 240 circuits
- Housing lock on 20 to 70 circuits
- Anti-flux design
- Metal solder tabs provide PCB hold down and strain relief for SMT tails
- Polarizing pegs assist placement

Reference Information

Packaging: Tube and embossed tape
Mates With: 52760 (H=5.0mm)
52837 (H=11.0mm)
Designed In: Millimeters

Mating Dimensions
1. 53475 • 52760
H=5.0mm W=6.4mm
2. 53475 • 52837
H=11.0mm W=6.4mm

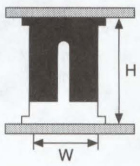

Electrical

Voltage: 100V
Current: 0.5A
Contact Resistance: 40mΩ max. (H=5.0mm)
60mΩ max. (H=11.0mm)
Dielectric Withstanding Voltage: 250V AC
Insulation Resistance: 1000 MΩ min.

Physical

Housing: White glass-filled LCP, UL 94V-0
Contact: Copper Alloy
Plating: Gold over Nickel
Operating Temperature: -55 to +85°C

CATALOG DRAWING (FOR REFERENCE ONLY)

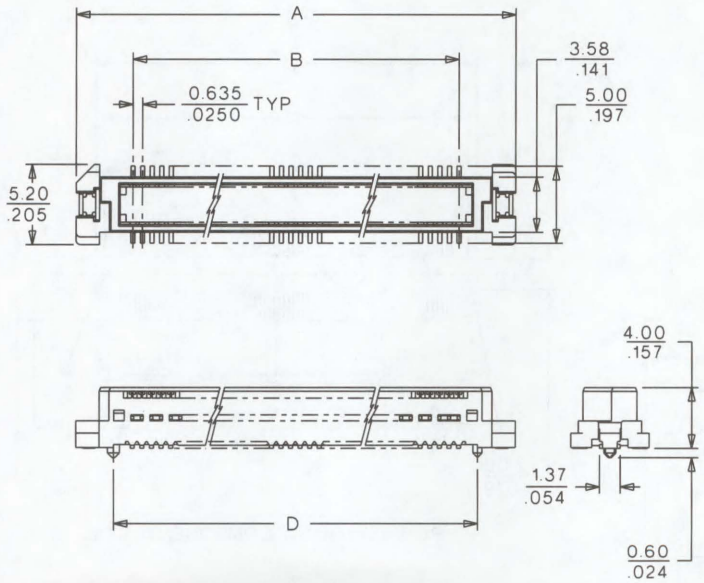

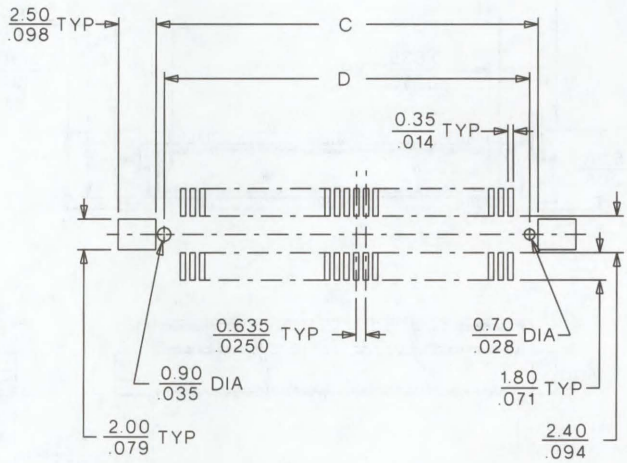

PCB LAYOUT : COMPONENT SIDE

ORDERING INFORMATION AND DIMENSIONS

Circuits	Order No.			Dimension			
	Tube	Tube with Cover	Embossed Tape with Cover	A	B	C	D
20	53475-0209	53643-0205	53643-0204	13.22 (.520)	5.715 (.220)	9.32 (.360)	8.22 (.320)
30	53475-0309		53643-0304	16.40 (.640)	8.890 (.340)	12.50 (.490)	11.40 (.440)
40	53475-0409	53643-0405	53643-0404	19.57 (.770)	12.065 (.470)	15.67 (.610)	14.57 (.570)
50	53475-0509		53643-0504	22.75 (.890)	15.240 (.590)	18.85 (.740)	17.75 (.690)
60	53475-0609			25.92 (1.020)	18.415 (.720)	22.02 (.860)	20.92 (.820)
68	53475-0689			28.46 (1.120)	20.955 (.820)	24.56 (.960)	23.46 (.920)
70	53475-0709	53643-0705	53643-0704	29.10 (1.140)	21.590 (.840)	25.20 (.990)	24.10 (.940)
80	53475-0809		53643-0804	32.27 (1.270)	24.765 (.970)	28.37 (1.110)	27.27 (1.070)
90	53475-0909			35.45 (1.390)	27.940 (1.090)	31.55 (1.240)	30.45 (1.190)
100	53475-1009		53643-1004	38.62 (1.520)	31.115 (1.220)	34.72 (1.360)	33.62 (1.320)
120	53475-1209		53643-1204	44.97 (1.770)	37.465 (1.470)	41.07 (1.610)	39.97 (1.570)
140	53475-1409	53643-1405	53643-1404	51.32 (2.020)	43.815 (1.720)	47.42 (1.860)	46.32 (1.820)
160	53475-1609		53643-1604	57.67 (2.270)	50.165 (1.970)	53.77 (2.110)	52.67 (2.070)
180	53475-1809			64.02 (2.520)	56.515 (2.220)	60.12 (2.360)	59.02 (2.320)
200	53475-2009			70.37 (2.770)	62.865 (2.470)	66.47 (2.610)	65.37 (2.570)
240	53475-2409			83.07 (3.270)	75.565 (2.970)	79.17 (3.110)	78.07 (3.070)

Note: Use only one connector per daughterboard in order to insure proper mating alignment
Note: Contact Molex for embossed tape specifications

FEATURES AND SPECIFICATIONS

0.635mm (.025") Pitch Board-to-Board Plug

53467/53645

SMT, Dual Row Vertical Stacking

Features and Benefits

- Stacking height: 6.0 and 12.0mm
- Sizes 20 to 240 circuits
- Housing lock on 20 to 70 circuits
- Anti-flux design
- Metal solder tabs provide PCB hold down and strain relief for SMT tails
- Polarizing pegs assist placement

Reference Information

Packaging: Tube and embossed tape
Mates With: 52760 (H=6.0mm)
52837 (H=12.0mm)
Designed In: Millimeters

Mating Dimensions
1. 53467 • 52760
H=6.0mm W=6.4mm
2. 53467 • 52837
H=12.0mm W=6.4mm

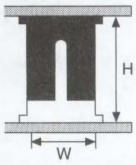

Electrical

Voltage: 100V
Current: 0.5A
Contact Resistance: 40mΩ max. (H=6.0mm)
60mΩ max. (H=12.0mm)
Dielectric Withstanding Voltage: 250V AC
Insulation Resistance: 1000 MΩ min.

Physical

Housing: White glass-filled LCP, UL 94V-0
Contact: Copper Alloy
Plating: Gold over Nickel
Operating Temperature: -55 to +85°C

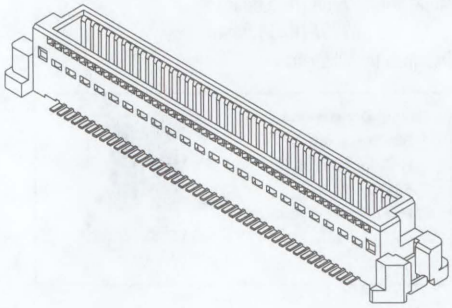

CATALOG DRAWING (FOR REFERENCE ONLY)

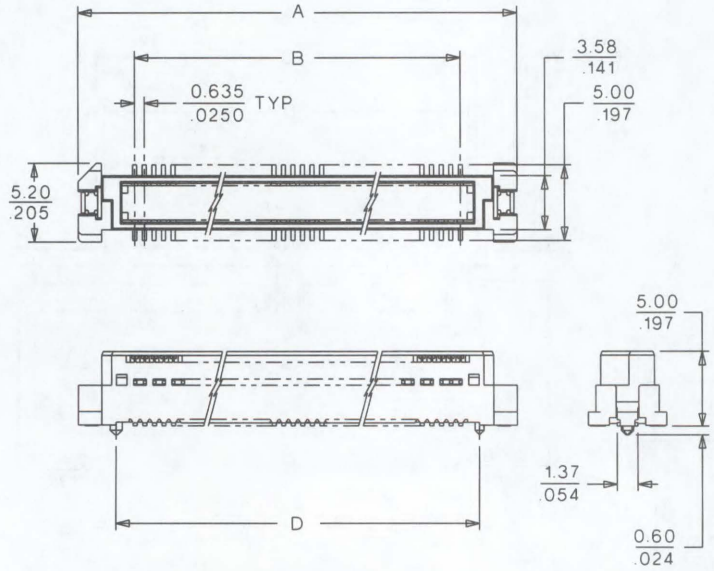

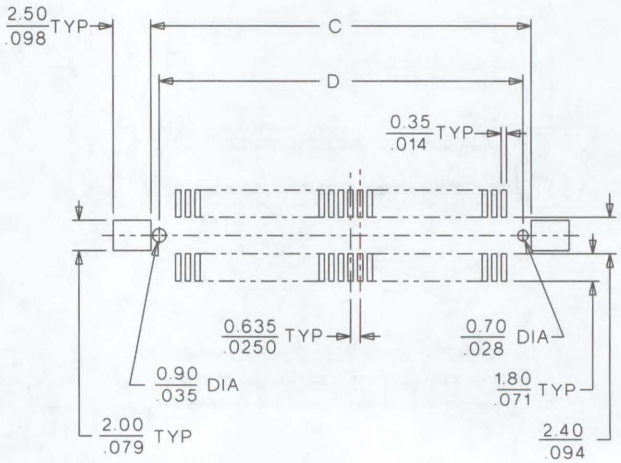

PCB LAYOUT : COMPONENT SIDE

ORDERING INFORMATION AND DIMENSIONS

Circuits	Order No.			Dimension			
	Tube	Tube with Cover	Embossed Tape with Cover	A	B	C	D
20	53467-0209			13.22 (.520)	5.715 (.220)	9.32 (.360)	8.22 (.320)
30	53467-0309		53645-0304	16.40 (.640)	8.890 (.340)	12.50 (.490)	11.40 (.440)
40	53467-0409			19.57 (.770)	12.065 (.470)	15.67 (.610)	14.57 (.570)
50	53467-0509			22.75 (.890)	15.240 (.590)	18.85 (.740)	17.75 (.690)
60	53467-0609			25.92 (1.020)	18.415 (.720)	22.02 (.860)	20.92 (.820)
68	53467-0689			28.46 (1.120)	20.955 (.820)	24.56 (.960)	23.46 (.920)
70	53467-0709			29.10 (1.140)	21.590 (.840)	25.20 (.990)	24.10 (.940)
80	53467-0809			32.27 (1.270)	24.765 (.970)	28.37 (1.110)	27.27 (1.070)
90	53467-0909			35.45 (1.390)	27.940 (1.090)	31.55 (1.240)	30.45 (1.190)
100	53467-1009			38.62 (1.520)	31.115 (1.220)	34.72 (1.360)	33.62 (1.320)
120	53467-1209	53645-1205		44.97 (1.770)	37.465 (1.470)	41.07 (1.610)	39.97 (1.570)
140	53467-1409			51.32 (2.020)	43.815 (1.720)	47.42 (1.860)	46.32 (1.820)
160	53467-1609		53645-1604	57.67 (2.270)	50.165 (1.970)	53.77 (2.110)	52.67 (2.070)
180	53467-1809			64.02 (2.520)	56.515 (2.220)	60.12 (2.360)	59.02 (2.320)
200	53467-2009			70.37 (2.770)	62.865 (2.470)	66.47 (2.610)	65.37 (2.570)
240	53467-2409			83.07 (3.270)	75.565 (2.970)	79.17 (3.110)	78.07 (3.070)

Note: Use only one connector per daughterboard in order to insure proper mating alignment
Note: Contact Molex for embossed tape specifications

0.635mm (.025") Pitch Board-to-Board Plug

53481/53625

SMT, Dual Row Vertical Stacking

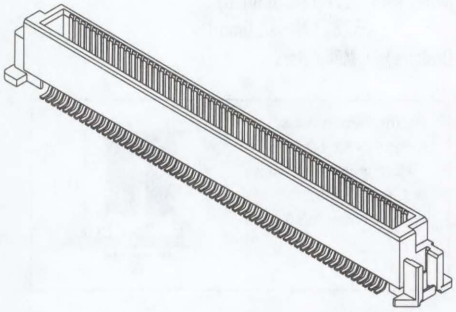

FEATURES AND SPECIFICATIONS

Features and Benefits

- Stacking height: 7.0 and 13.0mm
- Sizes 20 to 240 circuits
- Housing lock on 20 to 70 circuits
- Anti-flux design
- Metal solder tabs provide pcb hold down and strain relief for SMT tails
- Polarizing pegs assist placement

Reference Information

Packaging: Tube and embossed tape
Mates With: 52760 (H=7.0mm)
52837 (H=13.0mm)
Designed In: Millimeters

Mating Dimensions
1. 53481 • 52760
H=7.0mm W=6.4mm
2. 53481 • 52837
H=13.0mm W=6.4mm

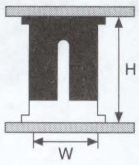

Electrical

Voltage: 100V
Current: 0.5A
Contact Resistance: 40mΩ max. (H=7.0mm)
60mΩ max. (H=13.0mm)
Dielectric Withstanding Voltage: 250V AC
Insulation Resistance: 1000 MΩ min.

Physical

Housing: White glass-filled LCP, UL 94V-0
Contact: Copper Alloy
Plating: Gold over Nickel
Operating Temperature: -55 to +85°C

CATALOG DRAWING (FOR REFERENCE ONLY)

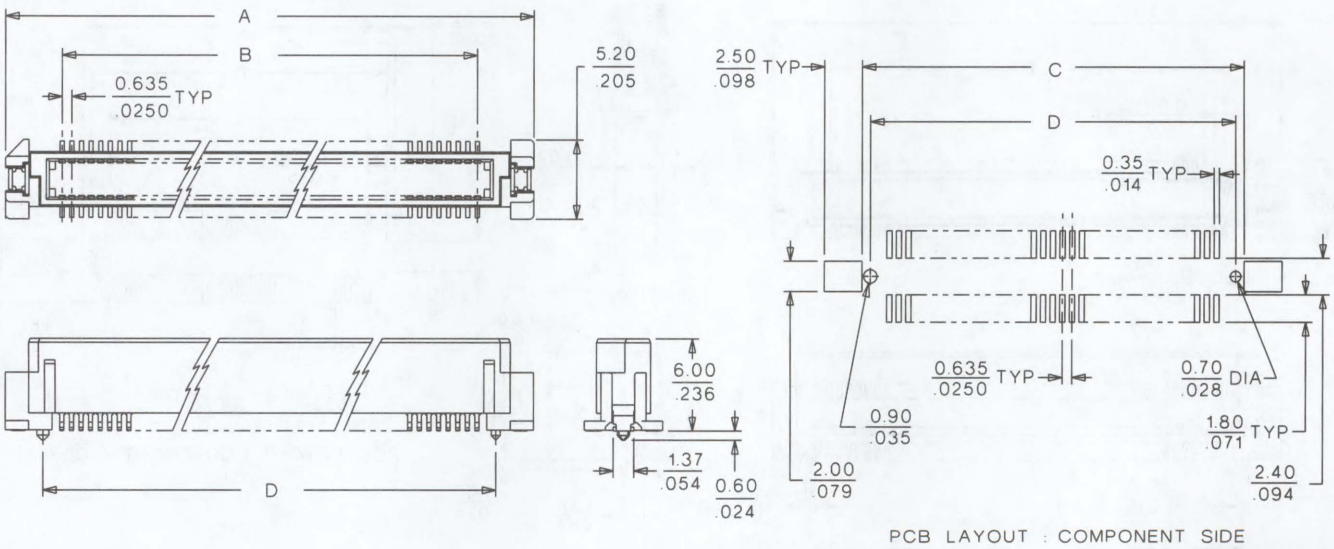

ORDERING INFORMATION AND DIMENSIONS

Circuits	Order No.			Dimension			
	Tube	Tube with Cover	Embossed Tape with Cover	A	B	C	D
20	53481-0209			13.22 (.520)	5.715 (.220)	9.32 (.360)	8.22 (.320)
30	53481-0309	53625-0305	53625-0304	16.40 (.640)	8.890 (.340)	12.50 (.490)	11.40 (.440)
40	53481-0409			19.57 (.770)	12.065 (.470)	15.67 (.610)	14.57 (.570)
50	53481-0509	53625-0505	53625-0504	22.75 (.890)	15.240 (.590)	18.85 (.740)	17.75 (.690)
60	53481-0609			25.92 (1.020)	18.415 (.720)	22.02 (.860)	20.92 (.820)
68	53481-0689			28.46 (1.120)	20.955 (.820)	24.56 (.960)	23.46 (.920)
70	53481-0709			29.10 (1.140)	21.590 (.840)	25.20 (.990)	24.10 (.940)
80	53481-0809		53625-0804	32.27 (1.270)	24.765 (.970)	28.37 (1.110)	27.27 (1.070)
90	53481-0909	53625-0905	53625-0904	35.45 (1.390)	27.940 (1.090)	31.55 (1.240)	30.45 (1.190)
100	53481-1009			38.62 (1.520)	31.115 (1.220)	34.72 (1.360)	33.62 (1.320)
120	53481-1209			44.97 (1.770)	37.465 (1.470)	41.07 (1.610)	39.97 (1.570)
140	53481-1409	53625-1405	53625-1404	51.32 (2.020)	43.815 (1.720)	47.42 (1.860)	46.32 (1.820)
160	53481-1609			57.67 (2.270)	50.165 (1.970)	53.77 (2.110)	52.67 (2.070)
180	53481-1809			64.02 (2.520)	56.515 (2.220)	60.12 (2.360)	59.02 (2.320)
200	53481-2009			70.37 (2.770)	62.865 (2.470)	66.47 (2.610)	65.37 (2.570)
240	53481-2409			83.07 (3.270)	75.565 (2.970)	79.17 (3.110)	78.07 (3.070)

Note: Use only one connector per daughterboard in order to insure proper mating alignment
Note: Contact Molex for embossed tape specifications

0.635mm (.025") Pitch Board-to-Board Plug

53551/53647

SMT, Dual Row Vertical Stacking

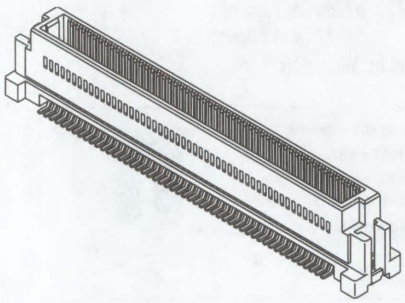

FEATURES AND SPECIFICATIONS

Features and Benefits

- Stacking height: 8.0 and 14.0mm
- Sizes 40, 60, 120 and 140 circuits
- Housing lock on 40 and 60 circuits
- Anti-flux design
- Metal solder tabs provide PCB hold down and strain relief for SMT tails
- Polarizing pegs assist placement

Reference Information

Packaging: Tube and embossed tape
Mates With: 52760 (H=8.0mm)
52837 (H=14.0mm)
Designed In: Millimeters

Mating Dimensions
1. 53551 • 52760
H=8.0mm W=6.4mm
2. 53551 • 52837
H=14.0mm W=6.4mm

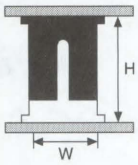

Electrical

Voltage: 100V
Current: 0.5A
Contact Resistance: 50mΩ max. (H=8.0mm)
70mΩ max. (H=14.0mm)
Dielectric Withstanding Voltage: 250V AC
Insulation Resistance: 1000 MΩ min.

Physical

Housing: Brown glass-filled PPS, UL 94V-0
Contact: Brass
Plating: Gold over Nickel
Operating Temperature: -55 to +85°C

CATALOG DRAWING (FOR REFERENCE ONLY)

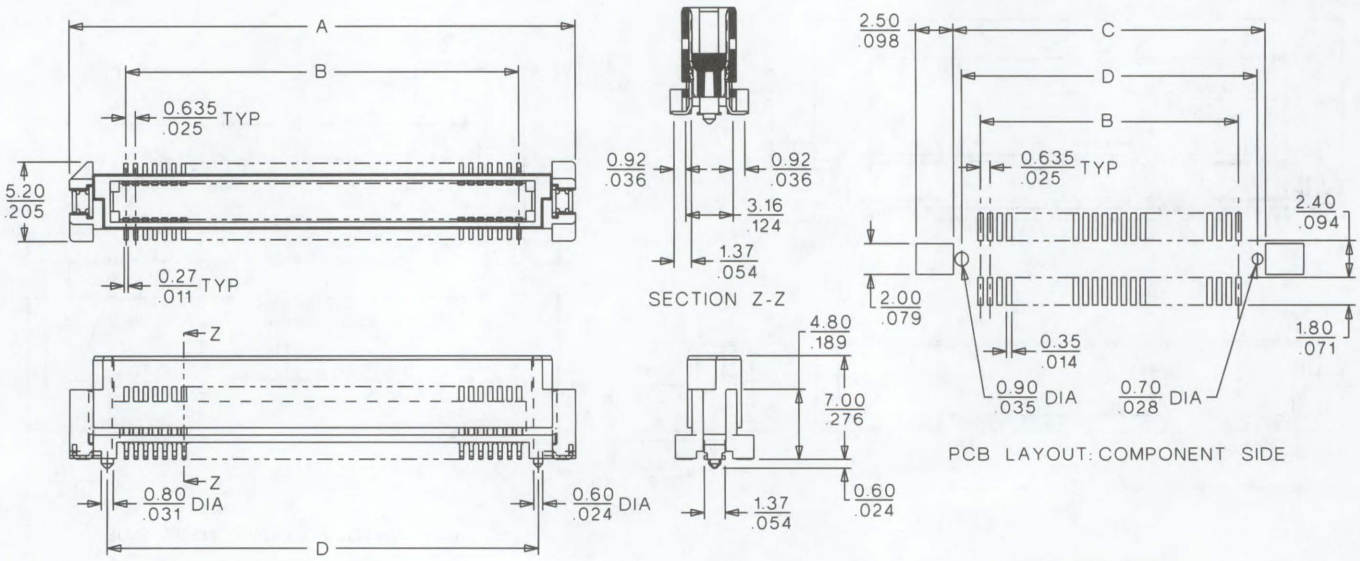

ORDERING INFORMATION AND DIMENSIONS

Circuits	Order No.		Dimension			
	Tube	Embossed Tape with Cover	A	B	C	D
20		53647-0204	13.22 (.520)	5.715 (.225)	9.32 (.367)	8.22 (.324)
30		53647-0304	16.40 (.646)	8.89 (.350)	12.50 (.492)	11.40 (.449)
40	53551-0409	53647-0404	19.57 (.770)	12.065 (.470)	15.67 (.616)	14.57 (.573)
60	53551-0609	53647-0604	25.92 (1.020)	18.415 (.720)	22.02 (.866)	20.92 (.823)
70	53551-0709		29.10 (1.147)	21.59 (.850)	25.20 (.992)	24.10 (.949)
80	53551-0809		32.27 (1.270)	24.77 (.975)	28.37 (1.117)	27.27 (1.074)
100	53551-1009		38.62 (1.520)	31.12 (1.225)	31.12 (1.225)	33.62 (1.324)
120	53551-1209		44.97 (1.770)	37.465 (1.475)	41.07 (1.616)	39.97 (1.573)
140	53551-1409		51.32 (2.020)	43.815 (1.725)	47.42 (1.866)	46.32 (1.823)
160		52647-1604	57.67 (2.270)	50.165 (1.975)	53.77 (2.117)	52.67 (2.074)

Note: Use only one connector per daughterboard in order to insure proper mating alignment
Note: Contact Molex for embossed tape specifications

0.635mm (.025") Pitch Board-to-Board Plug

53553/53627

SMT, Dual Row Vertical Stacking

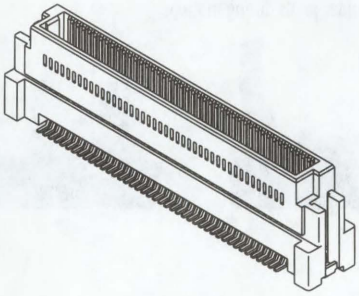

FEATURES AND SPECIFICATIONS

Features and Benefits

- Stacking height: 10.0 and 16.0mm
- Sizes 40, 60 and 140 circuits
- Housing lock on 20 to 70 circuits
- Anti-flux design
- Metal solder tabs provide PCB hold down and strain relief for SMT tails
- Polarizing pegs assist placement

Reference Information

Packaging: Tube and embossed tape
Mates With: 52760 (H=10.0mm)
52837 (H=16.0mm)
Designed In: Millimeters

Mating Dimensions
1. 53553 • 52760
H=10.0mm W=6.4mm
2. 53553 • 52837
H=16.0mm W=6.4mm

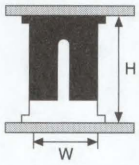

Electrical

Voltage: 100V
Current: 0.5A
Contact Resistance: 50mΩ max. (H=10.0mm)
70mΩ max. (H=16.0mm)
Dielectric Withstanding Voltage: 250V AC
Insulation Resistance: 1000 MΩ min.

Physical

Housing: Brown glass-filled PPS, UL 94V-0
Contact: Brass
Plating: Gold over Nickel
Operating Temperature: -55 to +85°C

CATALOG DRAWING (FOR REFERENCE ONLY)

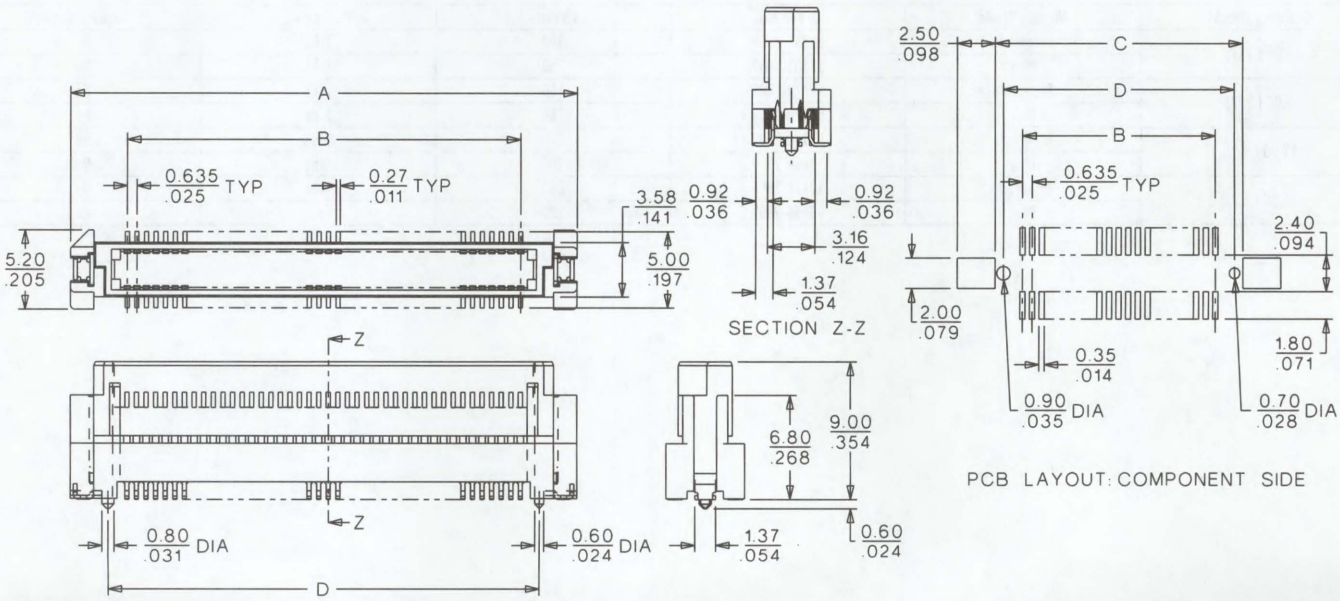

ORDERING INFORMATION AND DIMENSIONS

Note: Contact Molex for embossed tape specifications

Circuits	Order No.			Dimension			
	Tube	Tube with Cover	Embossed Tape with Cover	A	B	C	D
20		53627-0205	53627-0204	13.22 (.520)	5.71 (.225)	9.32 (.367)	8.22 (.324)
30			53627-0304	16.40 (.646)	8.89 (.350)	12.50 (.492)	11.40 (.449)
40	53553-0409		53627-0404	19.57 (.770)	11.94 (.470)	15.67 (.616)	14.57 (.573)
60	53553-0609		53627-0604	25.92 (1.020)	18.30 (.720)	22.02 (.866)	20.92 (.823)
70		53627-0705	53627-0704	29.10 (1.147)	21.59 (.850)	25.20 (.992)	24.10 (.949)
80	53553-0809	53627-0805	53627-0804	32.27 (1.270)	24.76 (.975)	28.37 (1.117)	27.27 (1.073)
90			53627-0904	35.45 (1.397)	27.94 (1.100)	31.55 (1.242)	30.45 (1.199)
100	53553-1009			38.62 (1.520)	31.11 (1.225)	34.72 (1.367)	33.62 (1.324)
120		53627-1205		44.97 (1.770)	37.46 (1.475)	41.07 (1.616)	39.97 (1.573)
140	53553-1409	53627-1405		51.32 (2.020)	43.81 (1.725)	47.42 (1.866)	46.32 (1.823)
160	53553-1609	53627-1605		57.67 (2.270)	50.16 (1.975)	53.77 (2.117)	52.67 (2.074)
180	53553-1809			64.02 (2.520)	56.51 (2.225)	60.12 (2.367)	59.02 (2.324)
200	53553-2009			70.37 (2.770)	62.86 (2.475)	66.47 (2.617)	65.37 (2.574)

Note: Use only one connector per daughterboard in order to insure proper mating alignment

0.635mm (.025") Pitch SMT Stacking Twin-Stack™ Board-to-Board Connectors Product Overview

Twin-Stack Applications

Molex's Twin-Stack connectors were originally designed for CPU add-on cards that require high circuit sizes and tight packaging. The bridge design provides mating stability for other high-density and large circuit size applications as well.

Shear Strength

The SMT tail design on Molex's Twin-Stack and standard 0.635mm pitch stacking plugs allows for strong solder fillets on all four sides. This provides additional hold-down or shear strength for solder joints during mating.

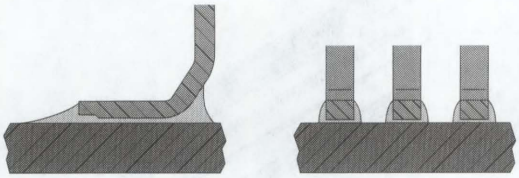

Stacking Height	Mating Types	Order No.	Circuits	Packaging	Vacuum Cover
4.00 (.157)	Receptacle	52855-2009	200	Tube	No
	Plug	53583-2009	200	Tube	No
5.00 (.197)	Receptacle	52770-1809	180	Tube	No
	Plug	53486-1809	180	Tube	No
12.00 (.472)	Receptacle	52910-2809	280	Tube	No
	Plug	53654-2809	280	Tube	No
16.00 (.630)	Receptacle	52910-2809	280	Tube	No
	Plug	53656-2809	280	Tube	No

0.635mm SMT TWIN-STACK STACKING HEIGHT OVERVIEW

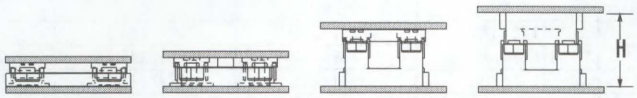

Stacking Height	4.00 (.157)	5.00 (.197)	12.00 (.472)	16.00 (.630)
Receptacle	52855	52770	52910	52910
Plug	53583	53486	53654	53656

0.635mm (.025") Pitch Twin-Stack™ Board-to-Board Receptacle

52855

SMT, Dual Row Vertical Bridge Stacking

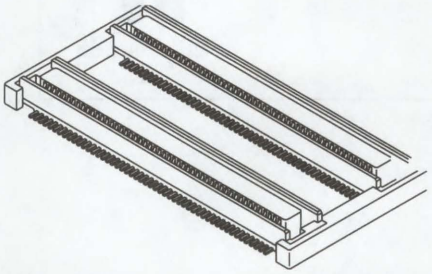

FEATURES AND SPECIFICATIONS

Features and Benefits

- Stacking height: 4.0mm
- Sizes 200 circuits
- Polarizing pegs assist placement

Reference Information

Packaging: Tube
Mates With: 53583
Designed In: Millimeters

Electrical

Voltage: 100V
Current: 0.5A
Contact Resistance: 40mΩ max.
Dielectric Withstanding Voltage: 250V AC
Insulation Resistance: 1000 MΩ min.

Physical

Housing: White glass-filled LCP, UL 94V-0
Contact: Phosphor Bronze
Plating: Gold over Nickel
Operating Temperature: -55 to +85°C

CATALOG DRAWING (FOR REFERENCE ONLY)

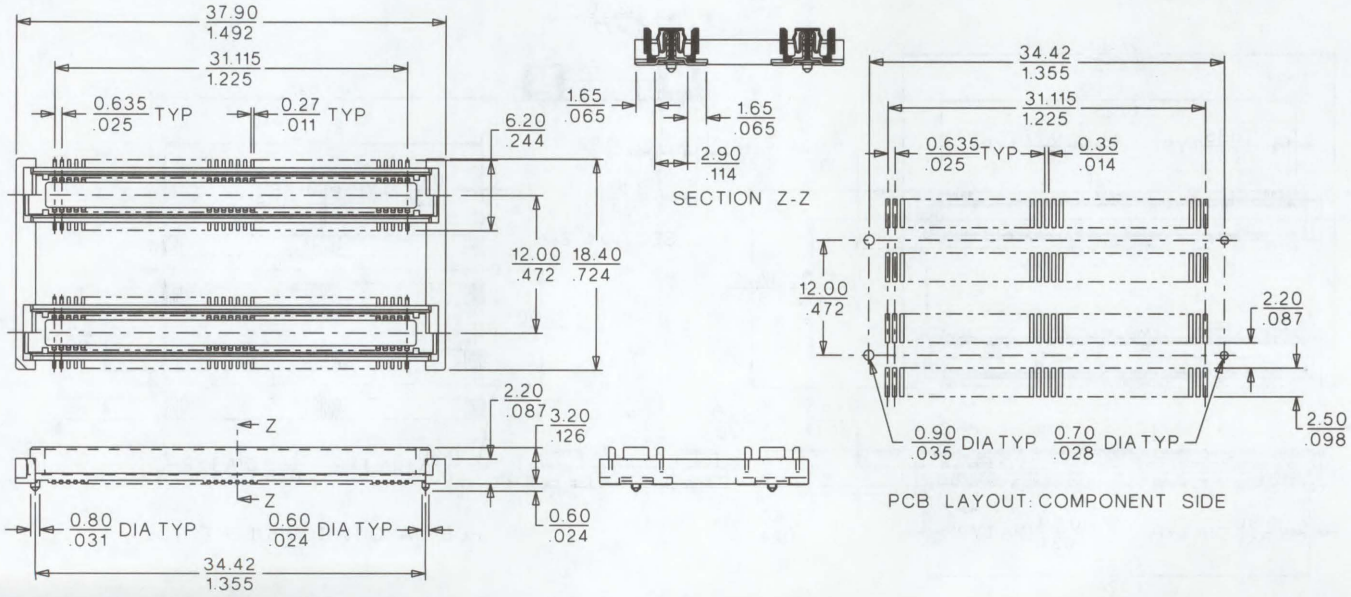

ORDERING INFORMATION

Circuits	Order No.
200	52855-2009

Note: Use only one connector per daughterboard in order to insure proper mating alignment

0.635mm (.025") Pitch Twin-Stack™ Board-to-Board Plug

53583

SMT, Dual Row Vertical Bridge Stacking

FEATURES AND SPECIFICATIONS

Features and Benefits

- Stacking height: 4.0mm
- Sizes 200 circuits
- Polarizing pegs assist placement

Reference Information

Packaging: Tube
Mates With: 52855
Designed In: Millimeters

Mating Dimensions
53583 • 52855
H=4.0mm W=18.4mm

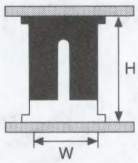

Electrical

Voltage: 100V
Current: 0.5A
Contact Resistance: 40mΩ max.
Dielectric Withstanding Voltage: 250V AC
Insulation Resistance: 1000 MΩ min.

Physical

Housing: White glass-filled LCP, UL 94V-0
Contact: Brass
Plating: Gold over Nickel
Operating Temperature: -55 to +85°C

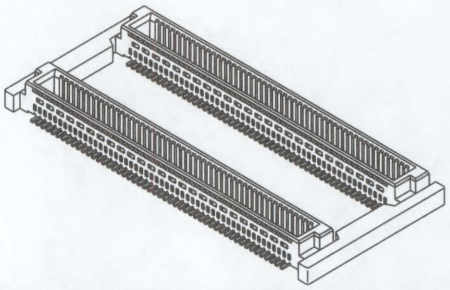

CATALOG DRAWING (FOR REFERENCE ONLY)

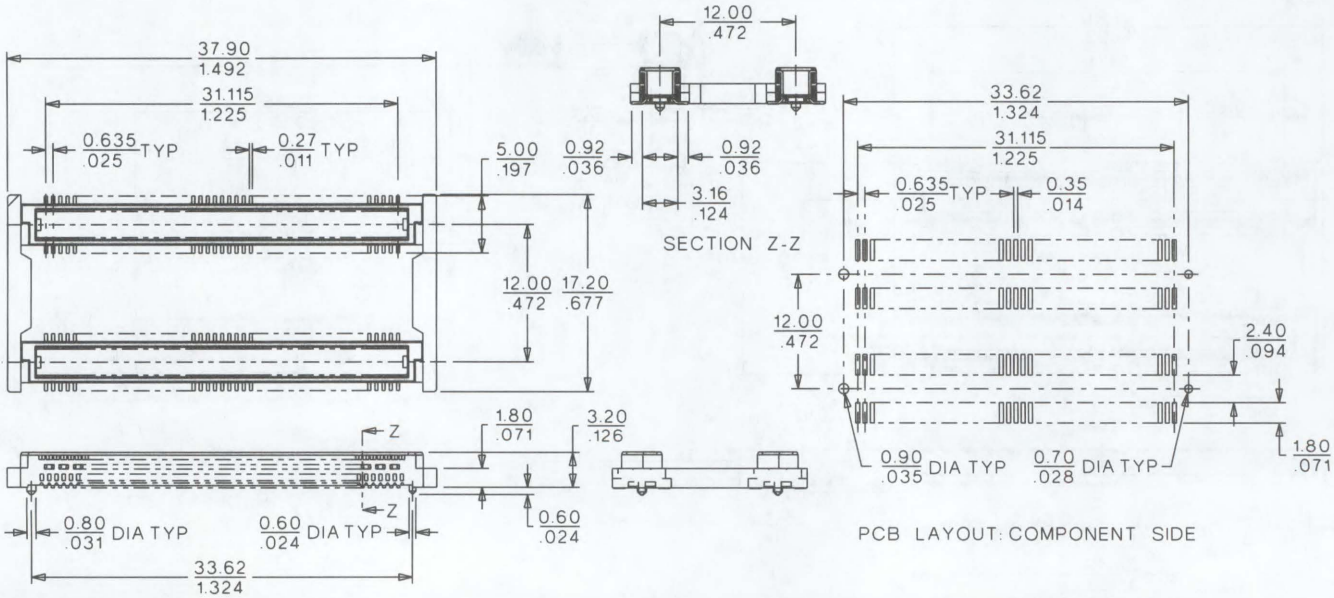

ORDERING INFORMATION

Circuits	Order No.
200	53583-2009

Note: Use only one connector per daughterboard in order to insure proper mating alignment

FEATURES AND SPECIFICATIONS

0.635mm (.025") Pitch Twin-Stack™ Board-to-Board Receptacle

52770

SMT, Dual Row Vertical Bridge Stacking

Features and Benefits

- Stacking height: 5.0mm
- Sizes 180 circuits
- Polarizing pegs assist placement

Reference Information

Packaging: Tube
Mates With: 53486
Designed In: Millimeters

Electrical

Voltage: 100V
Current: 0.5A
Contact Resistance: 40mΩ max.
Dielectric Withstanding Voltage: 250V AC
Insulation Resistance: 1000 MΩ min.

Physical

Housing: White glass-filled LCP, UL 94V-0
Contact: Copper Alloy
Plating: Gold over Nickel
Operating Temperature: -55 to +85°C

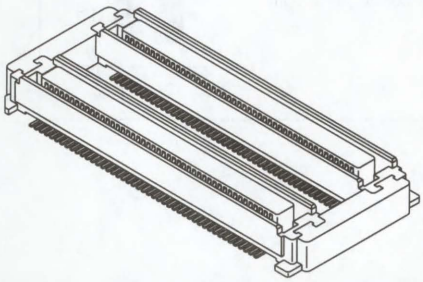

CATALOG DRAWING (FOR REFERENCE ONLY)

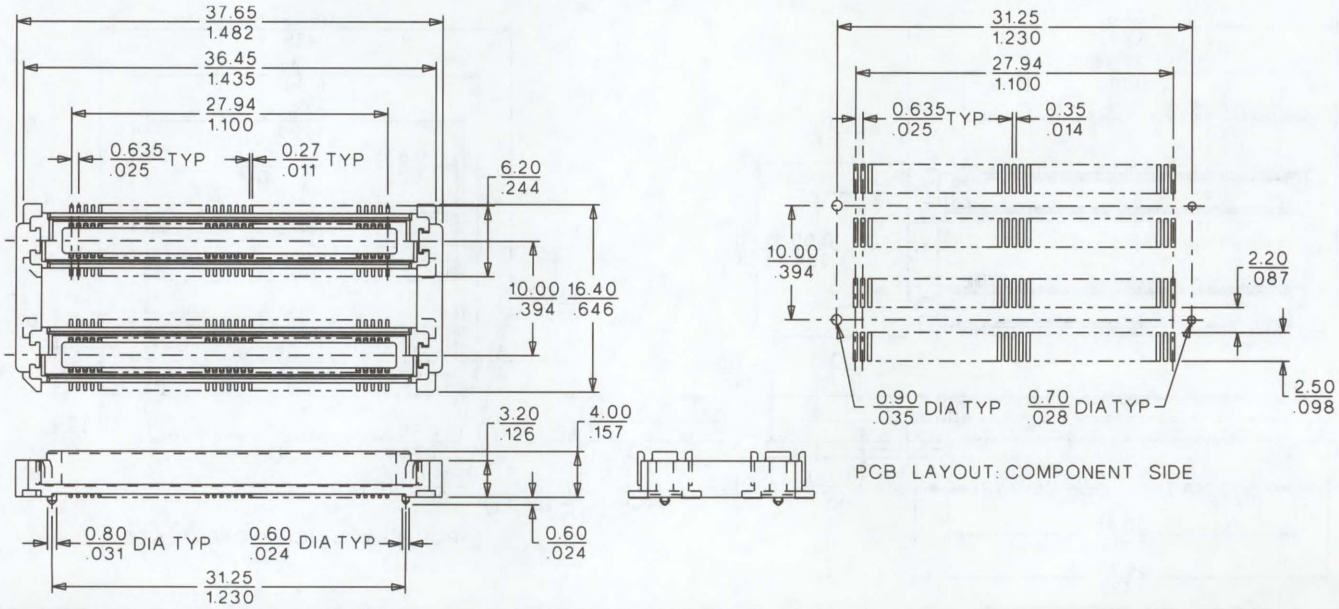

ORDERING INFORMATION

Circuits	Order No.
180	52770-1809

Note: Use only one connector per daughterboard in order to insure proper mating alignment

0.635mm (.025") Pitch Twin-Stack™ Board-to-Board Plug

53486

SMT, Dual Row Vertical Bridge Stacking

FEATURES AND SPECIFICATIONS

Features and Benefits

- Stacking height: 5.0mm
- Sizes 180 circuits
- Polarizing pegs assist placement
- PCB pegs provide added stability

Reference Information

Packaging: Tube
Mates With: 52770
Designed In: Millimeters

Mating Dimensions
53486 • 52770
H=5.0mm W=16.4mm

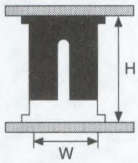

Electrical

Voltage: 100V
Current: 0.5A
Contact Resistance: 40mΩ max.
Dielectric Withstanding Voltage: 250V AC
Insulation Resistance: 1000 MΩ min.

Physical

Housing: White glass-filled LCP, UL 94V-0
Contact: Copper Alloy
Plating: Gold over Nickel
Operating Temperature: -55 to +85°C

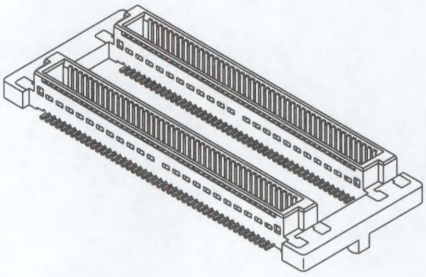

CATALOG DRAWING (FOR REFERENCE ONLY)

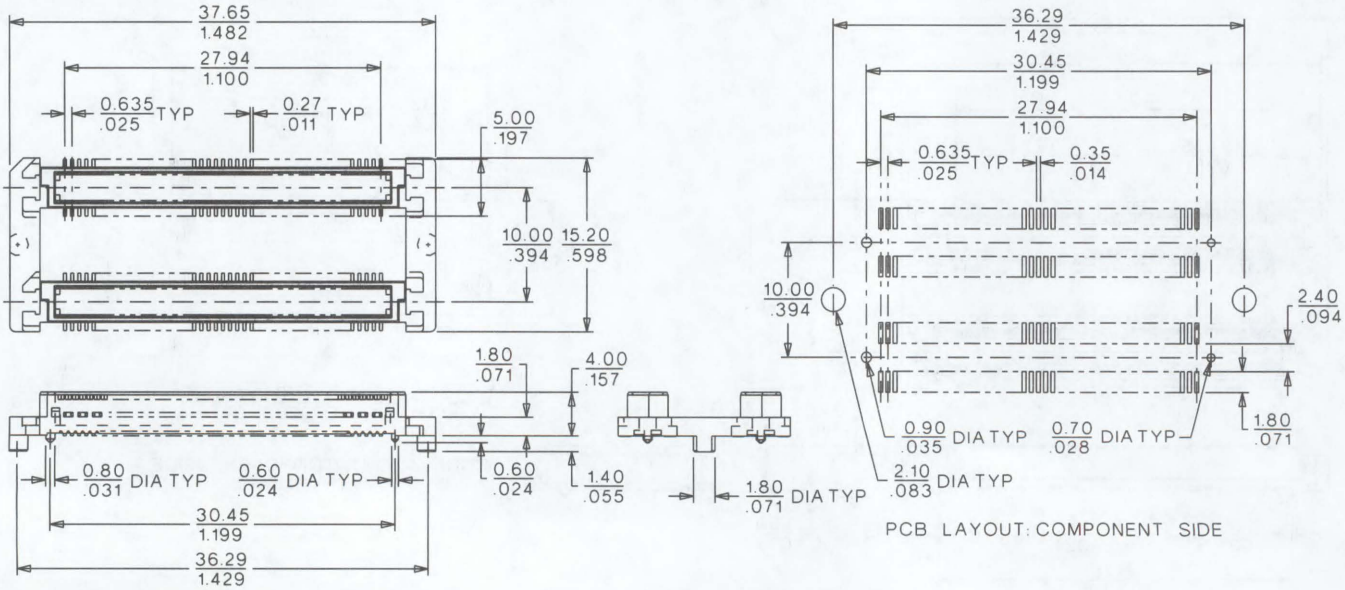

ORDERING INFORMATION

Circuits	Order No.
180	53486-1809

Note: Use only one connector per daughterboard in order to insure proper mating alignment

0.635mm (.025") Pitch Twin-Stack™ Board-to-Board Receptacle

52910

SMT, Dual Row Vertical Bridge Stacking

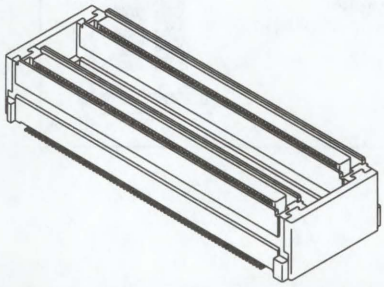

FEATURES AND SPECIFICATIONS

Features and Benefits

- Stacking height: 12.0 and 16.0mm
- Sizes 280 circuits
- Polarizing pegs assist placement

Reference Information

Packaging: Tube
Mates With: 53654 (H=12.0mm)
53656 (H=16.0mm)
Designed In: Millimeters

Electrical

Voltage: 100V
Current: 0.5A
Contact Resistance: 60mΩ max. (H=12.0mm)
70mΩ max. (H=16.0mm)
Dielectric Withstanding Voltage: 250V AC
Insulation Resistance: 1000 MΩ min.

Physical

Housing: White glass-filled LCP, UL 94V-0
Contact: Copper Alloy
Plating: Gold over Nickel
Operating Temperature: -55 to +85°C

CATALOG DRAWING (FOR REFERENCE ONLY)

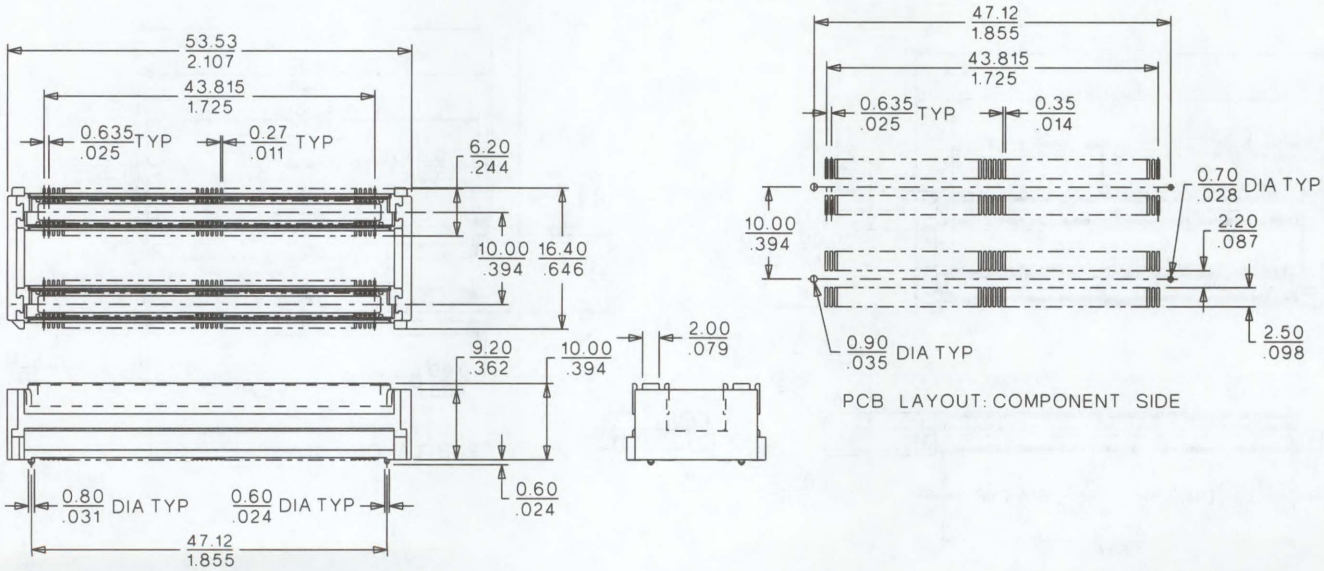

ORDERING INFORMATION

Circuits	Order No.
280	52910-2809

Note: Use only one connector per daughterboard in order to insure proper mating alignment.

0.635mm (.025") Pitch Twin-Stack™ Board-to-Board Plug

53654

SMT, Dual Row Vertical Bridge Stacking

FEATURES AND SPECIFICATIONS

Features and Benefits

- Stacking height: 12.0mm
- Sizes 280 circuits
- Polarizing pegs assist placement
- Metal solder tabs provide PCB hold-down and strain relief for SMT tails

Reference Information

Packaging: Tube
Mates With: 52910
Designed In: Millimeters

Mating Dimensions
53654 • 52910
H=12.0mm W=16.4mm

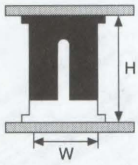

Electrical

Voltage: 100V
Current: 0.5A
Contact Resistance: 60mΩ max.
Dielectric Withstanding Voltage: 250V AC
Insulation Resistance: 1000 MΩ min.

Physical

Housing: White glass-filled LCP, UL 94V-0
Contact: Phosphor Bronze
Plating: Gold over Nickel
Operating Temperature: -55 to +85°C

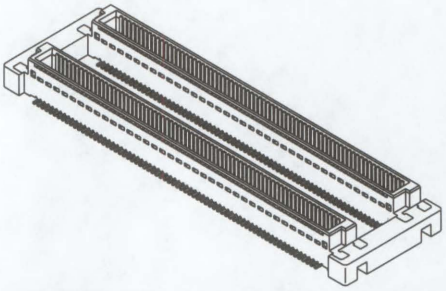

CATALOG DRAWING (FOR REFERENCE ONLY)

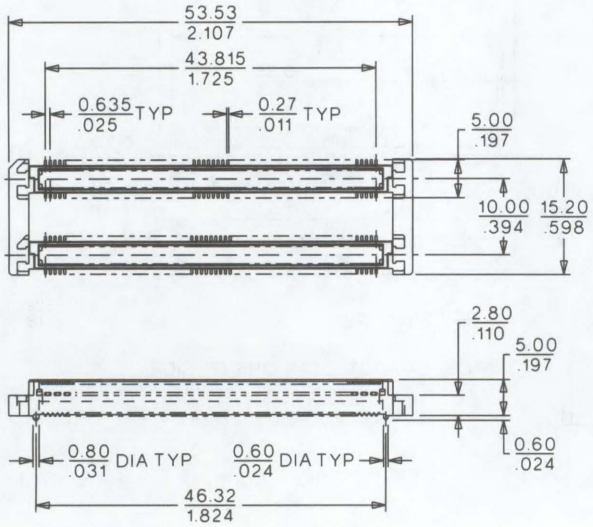

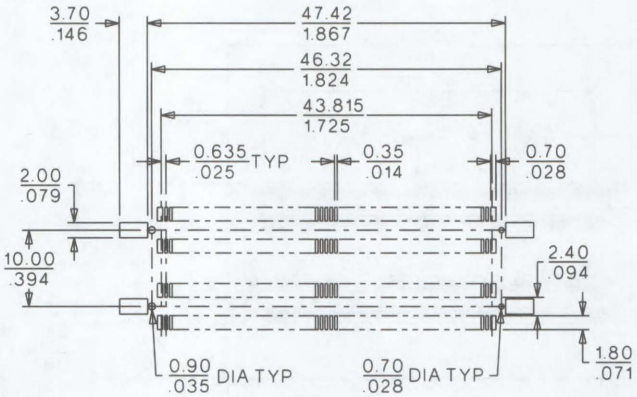

PCB LAYOUT: COMPONENT SIDE

ORDERING INFORMATION

Circuits	Order No.
280	53654-2809

Note: Use only one connector per daughterboard in order to insure proper mating alignment

0.635mm (.025") Pitch Twin-Stack™ Board-to-Board Plug

53656

SMT, Dual Row Vertical Bridge Stacking

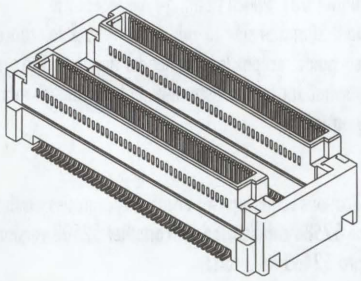

FEATURES AND SPECIFICATIONS

Features and Benefits

- Stacking height: 16.0mm
- Sizes 280 circuits
- Polarizing pegs assist placement
- Metal solder tabs provide PCB hold-down and strain relief for SMT tails

Reference Information

Packaging: Tube
Mates With: 52910
Designed In: Millimeters

Mating Dimensions
53656 • 52910
H=16.0mm W=16.4mm

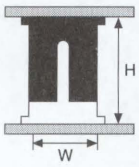

Electrical

Voltage: 100V
Current: 0.5A
Contact Resistance: 70mΩ max.
Dielectric Withstanding Voltage: 250V AC
Insulation Resistance: 1000 MΩ min.

Physical

Housing: Brown glass-filled PPS, UL 94V-0
Contact: Copper Alloy
Plating: Gold over Nickel
Operating Temperature: -55 to +85°C

CATALOG DRAWING (FOR REFERENCE ONLY)

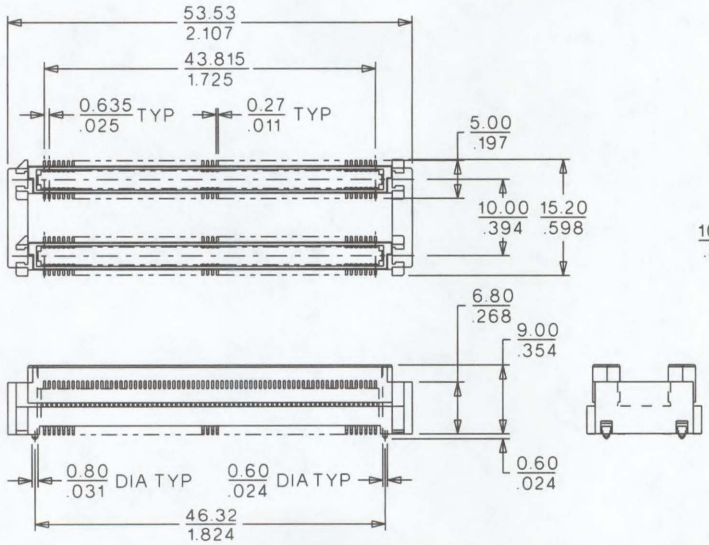

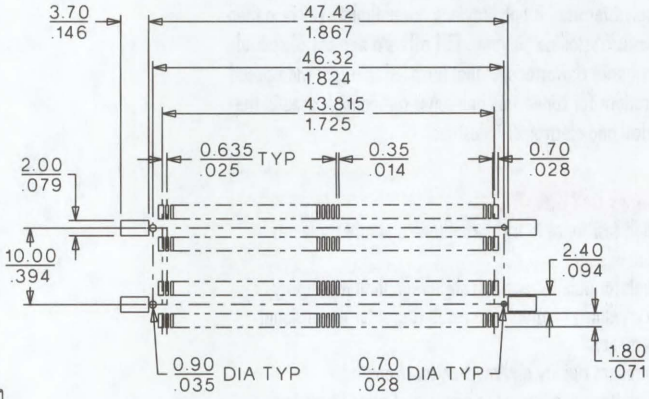

PCB LAYOUT: COMPONENT SIDE

ORDERING INFORMATION

Circuits	Order No.
280	53656-2809

Note: Use only one connector per daughterboard in order to insure proper mating alignment

FEATURES AND SPECIFICATIONS

Features and Benefits

The following two series of board-to-board connectors are available in Tin-plating and smaller circuit sizes for consumer and other micro applications.

Our 0.80mm (.031") pitch series is available with three different size vertical headers for stacking flexibility, along with a right angle header for micro daughterboard applications. A 1.0mm right angle version is also available.

How to Use the 52588 Floating Receptacle

Molex's 0.80mm (.031") pitch floating-type receptacle provides up to 0.30mm of side-to-side or front-back tolerance in order to help guide receptacles and header together. The system is ideally suited for robotic assembly, but also makes manual assembly easier.

Note: In applications requiring two or more receptacles on the same PCB, the 52588 can be used with another 52588 version or the standard 52465 receptacle.

PBT PLASTICS—AN INTRODUCTION

Molex connectors are often made of either nylon or polyester. The polyester used is polybutylene terephthalate (PBT), a thermoplastic crystalline polymer. PBT offers a number of special performance characteristics that have led to recent widespread applications for connectors and other components used in the electrical and electronics industries.

Features and Benefits

- High resistance to trichloroethane and other solvents and oils
- High formability with less shrinkage than most other crystalline polymers. The result is greater dimensional accuracy
- Excellent rigidity and mechanical strength
- High heat stability—the addition of glass fibers and other reinforcing materials can raise the heat resistance to over 200° C. Even without reinforcing agents, PBT components can withstand temperatures of up to 150° C without deformation.
- Good electrical properties
- Noncombustibility—flame retardants may be added without seriously impairing performance, and special treatment can then prevent retardant bleedout. This is a phenomenon that can lead to corrosion of metal parts in the vicinity.

0.80mm (.031") Pitch Board-to-Board Receptacle

52465

Dual Row SMT

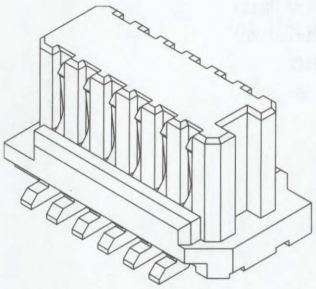

FEATURES AND SPECIFICATIONS

Features and Benefits

- Stacking Heights: 4.5, 6.0 and 7.0mm (5.65mm right angle mated height)
- Sizes 10 to 40 circuits

Reference Information

Packaging: Embossed tape
Mates With: 53307 (H=4.5mm)
53309 (H=5.65mm)
53364 (H=6.0mm)
53353 (H=7.0mm)
Designed In: Millimeters

Electrical

Voltage: 50V
Current: 0.5A
Contact Resistance: 20mΩ max.
Dielectric Withstanding Voltage: 500V AC/1 min.
Insulation Resistance: 100 MΩ min.

Physical

Housing: PPA, UL 94V-0
Contact: Phosphor Bronze
Plating: Tin
Operating Temperature: -20 to +105°C

CATALOG DRAWING (FOR REFERENCE ONLY)

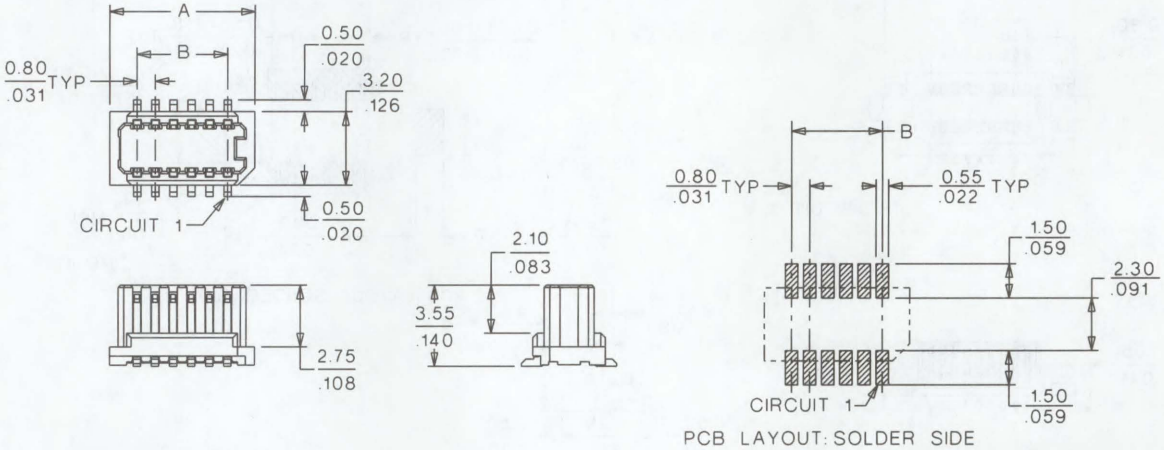

ORDERING INFORMATION AND DIMENSIONS

Circuits	Order No.	Dimension		Carrier Tape Width
		A	B	
10	52465-1091	5.60 (.220)	3.20 (.126)	16.00 (.630)
12	52465-1291	6.40 (.252)	4.00 (.157)	
14	52465-1491	7.20 (.283)	4.80 (.189)	
16	52465-1691	8.00 (.315)	5.60 (.220)	
18	52465-1891	8.80 (.346)	6.40 (.252)	
20	52465-2091	9.60 (.378)	7.20 (.283)	24.00 (.945)
22	52465-2291	10.40 (.409)	8.00 (.315)	
24	52465-2491	11.20 (.441)	8.80 (.346)	
26	52465-2691	12.00 (.472)	9.60 (.378)	
28	52465-2891	12.80 (.504)	10.40 (.409)	
30	52465-3091	13.60 (.535)	11.20 (.441)	
32	52465-3291	14.40 (.566)	12.00 (.472)	
34	52465-3491	15.20 (.598)	12.80 (.503)	
36	52465-3691	16.00 (.629)	13.60 (.535)	
38	52465-3891	16.80 (.661)	14.40 (.566)	32.00 (1.259)
40	52465-4091	17.60 (.692)	15.20 (.598)	

Note: Contact Molex for embossed tape specifications
Note: When more than one connector is needed on same board, use with 52588 version

0.80mm (.031") Pitch Board-to-Board Receptacle

52588

Floating-Type SMT

FEATURES AND SPECIFICATIONS

Features and Benefits

- Stacking Heights: 5.5, 7.0 and 8.0mm (6.65mm right angle mated height)
- Sizes 18, 20, 28 and 30 circuits
- Connector has 0.3mm of tolerance in X, Y and Z axis to assist in mating

Reference Information

Packaging: Embossed tape
Mates With: 53307 (H=5.5mm)
53309 (H=6.65mm)
53364 (H=7.0mm)
53353 (H=8.0mm)
Designed In: Millimeters

Electrical

Voltage: 50V
Current: 0.5A
Contact Resistance: 40mΩ max.
Dielectric Withstanding Voltage: 500V AC/1 min.
Insulation Resistance: 100 MΩ min.

Physical

Housing: PPA, UL 94V-0
Contact: Phosphor Bronze
Plating: Tin
Operating Temperature: -20 to +105°C

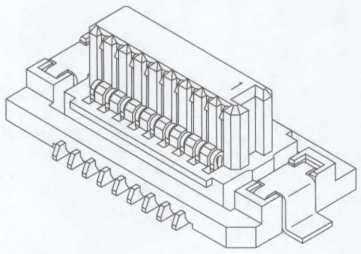

CATALOG DRAWING (FOR REFERENCE ONLY)

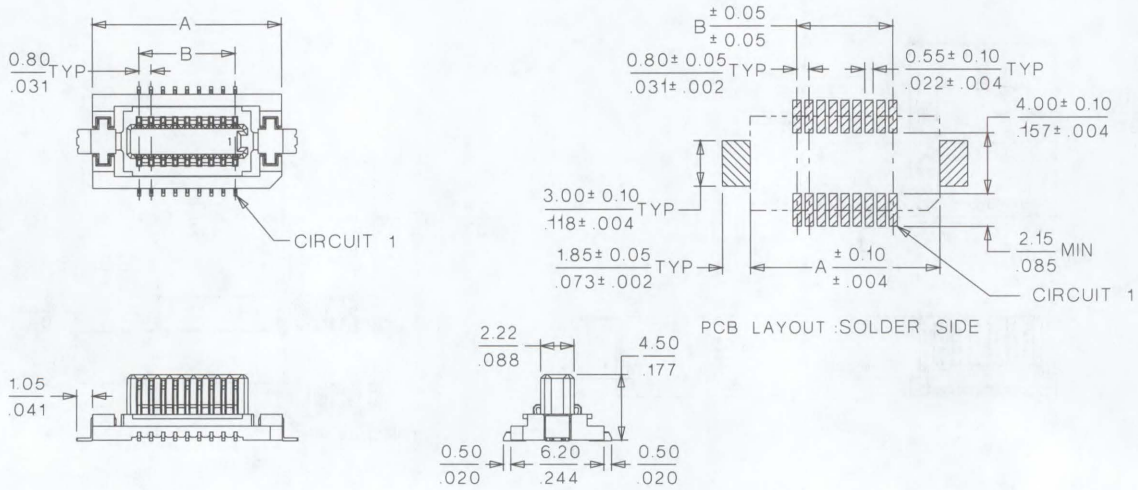

ORDERING INFORMATION AND DIMENSIONS

Circuits	Order No.	Dimension		Carrier Tape Width
		A	B	
18	52588-1890	12.60 (.496)	6.40 (.251)	24.00 (.944)
20	52588-2090	13.40 (.527)	7.20 (.283)	
28	52588-2890	16.60 (.653)	10.40 (.409)	32.00 (1.259)
30	52588-3090	17.40 (.685)	11.20 (.440)	

Note: Contact Molex for embossed tape specifications

0.80mm (.031") Pitch Board-to-Board Header

53307

SMT, Dual Row Vertical Stacking

FEATURES AND SPECIFICATIONS

Features and Benefits

- Stacking height: 4.5 and 5.5mm
- Sizes 10 to 40 circuits

Reference Information

Packaging: Embossed tape
Mates With: 52465 (4.5mm)
52588 (5.5mm)
Designed In: Millimeters

Electrical

Voltage: 50V
Current: 0.5A
Contact Resistance: 40mΩ max.
Dielectric Withstanding Voltage: 500V AC/1 min.
Insulation Resistance: 100 MΩ min.

Physical

Housing: PPS, UL 94V-0
Contact: Phosphor Bronze
Plating: Tin
Operating Temperature: -20 to +105°C

Mating Dimensions

1. 53307 • 52465
   H=4.5mm W=4.1mm
2. 53307 • 52588
   H=5.5mm W=6.2mm

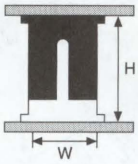

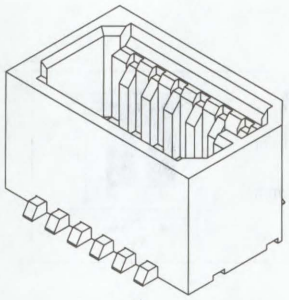

CATALOG DRAWING (FOR REFERENCE ONLY)

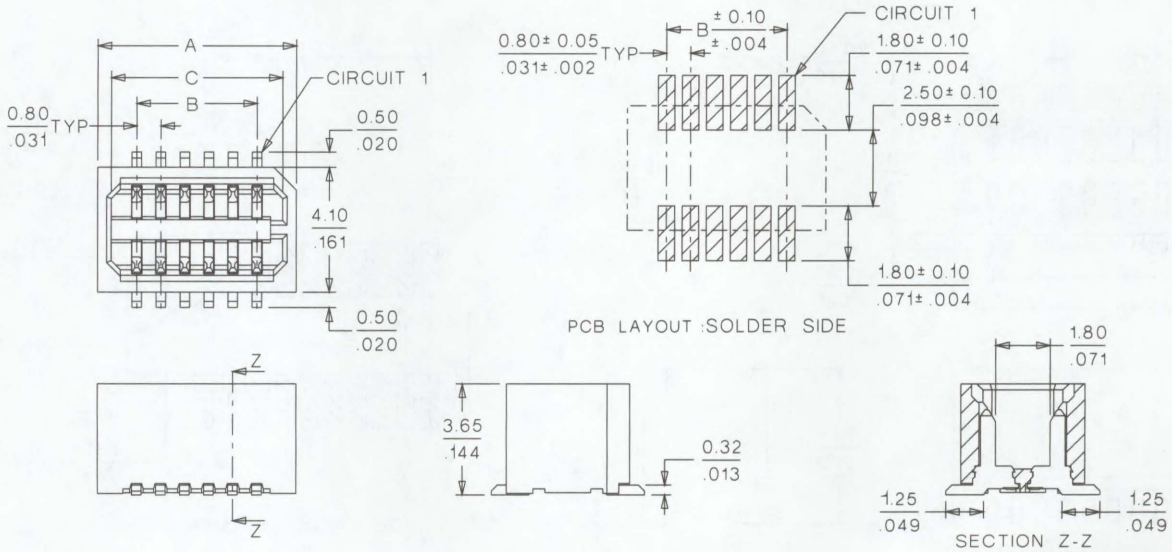

ORDERING INFORMATION AND DIMENSIONS

Circuits	Order No.	Dimension			Carrier Tape Width
		A	B	C	
10	53307-1091	5.80 (.228)	3.20 (.125)	4.90 (.192)	16.00 (.630)
12	53307-1291	6.60 (.260)	4.00 (.157)	5.70 (.224)	
14	53307-1491	7.40 (.291)	4.80 (.189)	6.50 (.256)	
16	53307-1691	8.20 (.323)	5.60 (.220)	7.30 (.287)	
18	53307-1891	9.00 (.354)	6.40 (.252)	8.10 (.319)	
20	53307-2091	9.80 (.386)	7.20 (.283)	8.90 (.350)	24.00 (.945)
22	53307-2291	10.60 (.417)	8.00 (.315)	9.70 (.382)	
24	53307-2491	11.40 (.449)	8.80 (.346)	10.50 (.413)	
26	53307-2691	12.20 (.480)	9.60 (.378)	11.30 (.445)	
28	53307-2891	13.00 (.512)	10.40 (.409)	12.10 (.476)	
30	53307-3091	13.80 (.543)	11.20 (.441)	12.90 (.508)	
34	53307-3491	15.40 (.606)	12.80 (.503)	14.50 (.570)	
36	53307-3691	16.20 (.637)	13.60 (.535)	15.30 (.602)	
40	53307-4091	17.80 (.700)	15.20 (.598)	16.90 (.665)	32.00 (1.259)

Note: Contact Molex for embossed tape specifications

0.80mm (.031") Pitch Board-to-Board Header

53364

SMT, Dual Row Vertical Stacking

FEATURES AND SPECIFICATIONS

Features and Benefits

- Stacking height: 6.0 and 7.0mm
- Sizes 10 to 40 circuits

Reference Information

Packaging: Embossed tape
Mates With: 52465 (6.0mm)
52588 (7.0mm)
Designed In: Millimeters

Electrical

Voltage: 50V
Current: 0.5A
Contact Resistance: 40mΩ max.
Dielectric Withstanding Voltage: 500V AC/1 min.
Insulation Resistance: 100 MΩ min.

Physical

Housing: PPS, UL 94V-0
Contact: Phosphor Bronze
Plating: Tin
Operating Temperature: -20 to +105°C

Mating Dimensions

1. 53364 • 52465
   H=6.0mm W=4.1mm
2. 53364 • 52588
   H=7.0mm W=6.2mm

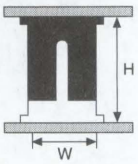

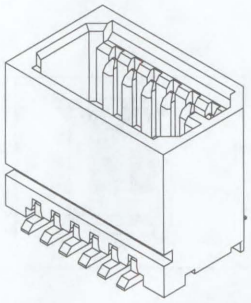

CATALOG DRAWING (FOR REFERENCE ONLY)

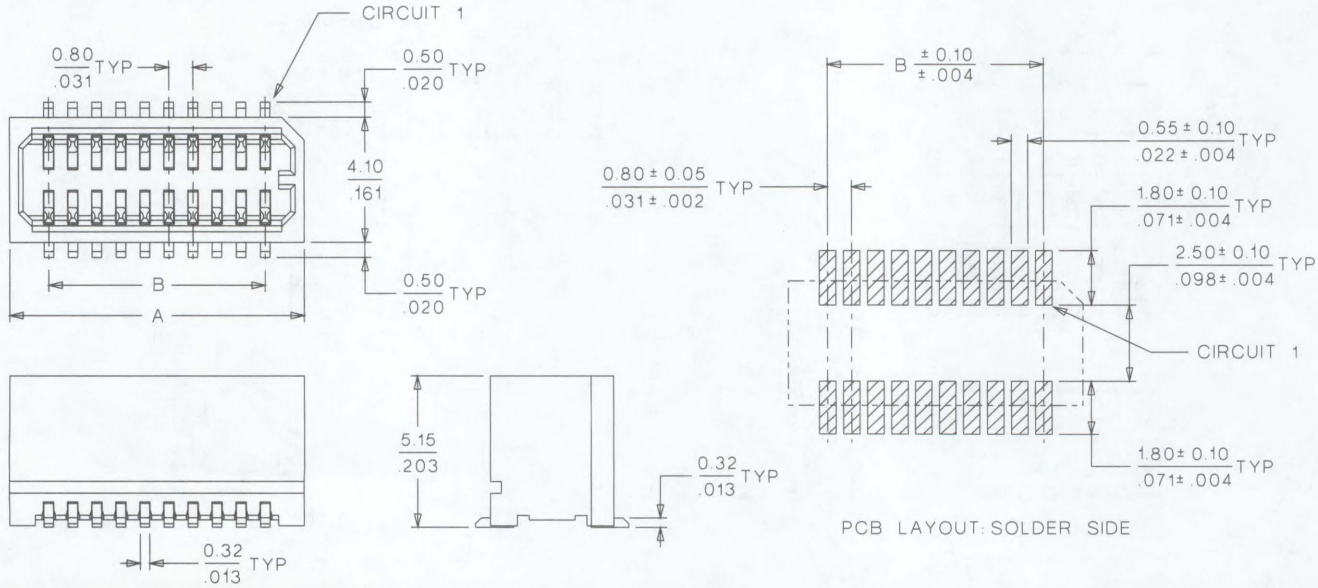

ORDERING INFORMATION AND DIMENSIONS

Circuits	Order No.	Dimension		Carrier Tape Width
		A	B	
10	53364-1091	5.80 (.228)	3.20 (.125)	16.00 (.629)
12	53364-1291	6.60 (.259)	4.00 (.157)	
20	53364-2091	9.80 (.385)	7.20 (.283)	24.00 (.944)
28	53364-2891	13.00 (.511)	10.40 (.409)	
30	53364-3091	13.80 (.543)	11.20 (.440)	
36	53364-3691	16.20 (.637)	13.60 (.535)	
40	53364-4091	17.80 (.700)	15.20 (.598)	32.00 (1.259)

Note: Contact Molex for embossed tape specifications

0.80mm (.031") Pitch Board-to-Board Header

53353

SMT, Dual Row Vertical Stacking

FEATURES AND SPECIFICATIONS

Features and Benefits

- Stacking height: 7.0 and 8.0mm
- Sizes 10, 16 and 28 circuits

Reference Information

Packaging: Embossed tape
Mates With: 52465 (7.0mm)
52588 (8.0mm)
Designed In: Millimeters

Electrical

Voltage: 50V
Current: 0.5A
Contact Resistance: 20mΩ max.
Dielectric Withstanding Voltage: 500V AC/1 min.
Insulation Resistance: 100 MΩ min.

Physical

Housing: PPS, UL 94V-0
Contact: Phosphor Bronze
Plating: Tin
Operating Temperature: -20 to +105°C

Mating Dimensions

1. 53353 • 52465
   H=7.0mm W=4.1mm
2. 53353 • 52588
   H=8.0mm W=6.2mm

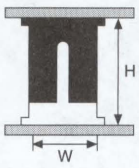

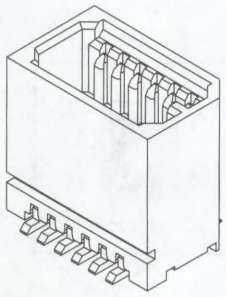

CATALOG DRAWING (FOR REFERENCE ONLY)

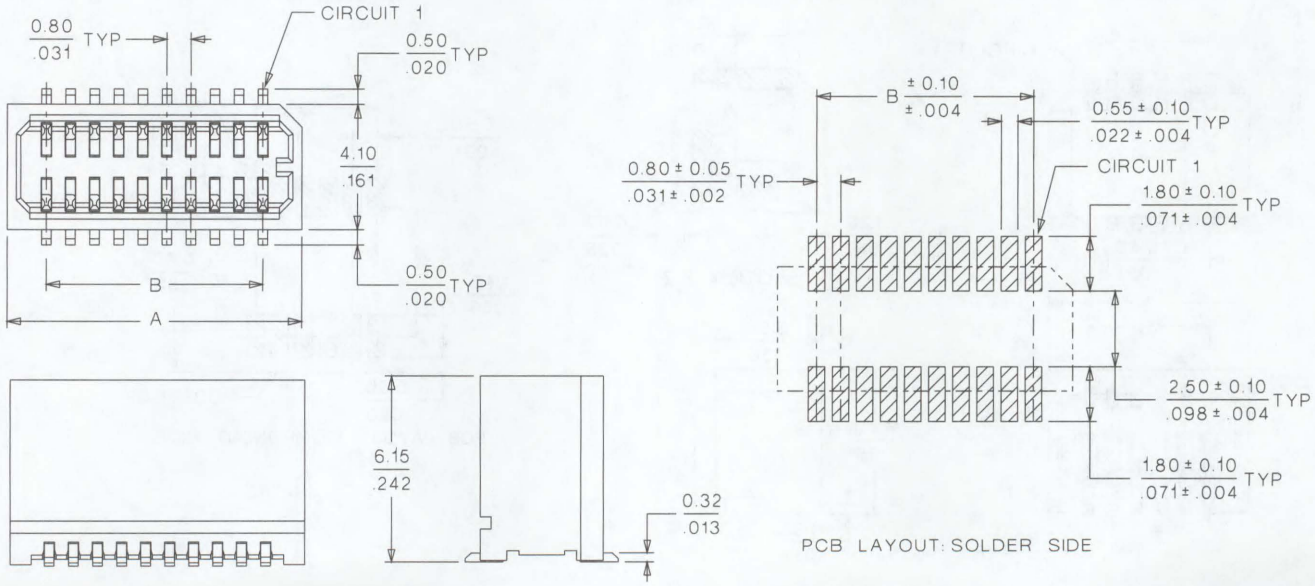

ORDERING INFORMATION AND DIMENSIONS

Circuits	Order No.	Dimension		Carrier Tape Width
		A	B	
10	53353-1091	5.80 (.228)	3.20 (.125)	16.00 (.629)
16	53353-1691	8.20 (.322)	5.60 (.220)	
28	53353-2891	13.00 (.511)	10.40 (.409)	24.00 (.944)

Note: Contact Molex for embossed tape specifications

0.80mm (.031") Pitch Board-to-Board Header

53309

SMT, Dual Row Right Angle

FEATURES AND SPECIFICATIONS

Features and Benefits
- Mated height: 5.65 and 6.65mm
- Sizes 10 to 40 circuits

Reference Information
Packaging: Embossed tape
Mates With: 52465 (5.65mm)
52588 (6.65mm)
Designed In: Millimeters

Electrical
Voltage: 50V
Current: 0.5A
Contact Resistance: 20mΩ max.
Dielectric Withstanding Voltage: 500V AC/1 min.
Insulation Resistance: 100 MΩ min.

Physical
Housing: PPS, UL 94V-0
Contact: Phosphor Bronze
Plating: Tin
Operating Temperature: -20 to +105°C

Mating Dimensions
1. 53309 • 52465
H=5.65mm W=4.7mm
2. 53309 • 52588
H=6.65mm W=5.7mm

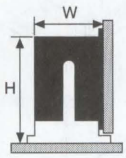

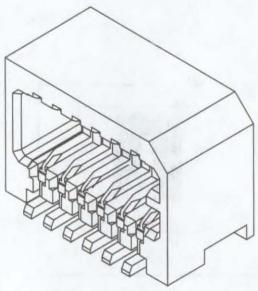

CATALOG DRAWING (FOR REFERENCE ONLY)

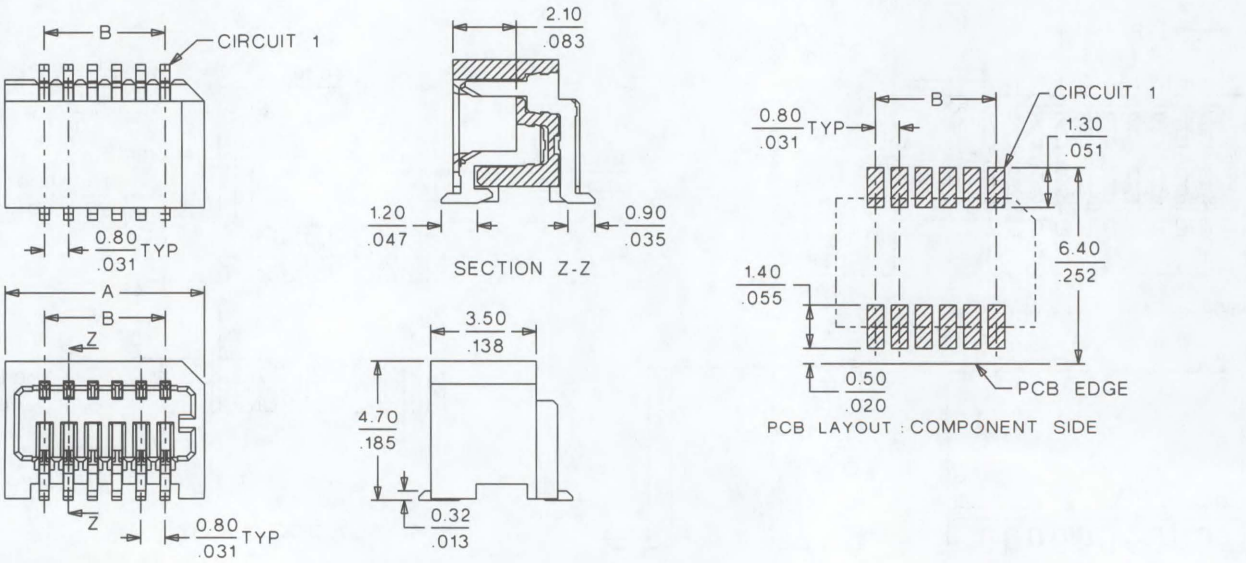

ORDERING INFORMATION AND DIMENSIONS

Circuits	Order No.	Dimension A	Dimension B	Carrier Tape Width
10	53309-1091	5.80 (.228)	3.20 (.126)	16.00 (.630)
12	53309-1291	6.60 (.259)	4.00 (.157)	
14	53309-1491	7.40 (.291)	4.80 (.189)	
16	53309-1691	8.20 (.323)	5.60 (.220)	
18	53309-1891	9.00 (.354)	6.40 (.252)	
20	53309-2091	9.80 (.386)	7.20 (.283)	24.00 (.945)
22	53309-2291	10.60 (.417)	8.00 (.315)	
24	53309-2491	11.40 (.449)	8.80 (.346)	
26	53309-2691	12.20 (.480)	9.60 (.377)	
28	53309-2891	13.00 (.512)	10.40 (.409)	
30	53309-3091	13.80 (.543)	11.20 (.441)	
32	53309-3291	14.60 (.570)	12.00 (.472)	
34	53309-3491	15.40 (.606)	12.80 (.503)	
36	53309-3691	16.20 (.637)	13.60 (.535)	
38	53309-3891	17.00 (.669)	14.40 (.566)	32.00 (1.259)
40	53309-4091	17.80 (.700)	15.20 (.598)	

Note: Contact Molex for embossed tape specifications

1.00mm (.039") Pitch SMT Stacking Board-to-Board Connectors Product Overview

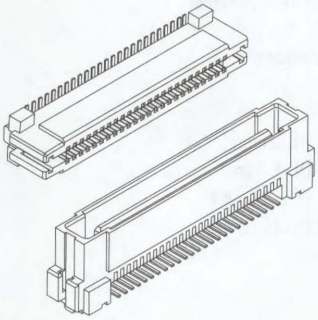

Stacking Height	Mating Types	Order No.	Circuits	Packaging	Vacuum Cover
5.00 (.197) ZYTON	Receptacle	87433-XX20	9-69	Tube	No
	Receptacle	87433-XX30*	9-69	Tube	No
	Receptacle	87433-XX40	9-69	Tube	Yes
	Receptacle	87433-XX50*	9-69	Tube	Yes
	Receptacle	87433-XX60	9-69	Embossed Tape	No
	Receptacle	87433-XX62	9-69	Embossed Tape	No
	Receptacle	87433-XX70*	9-69	Embossed Tape	No
	Receptacle	87433-XX72*	9-69	Embossed Tape	No
	Receptacle	87433-XX80	9-69	Embossed Tape	Yes
	Receptacle	87433-XX90*	9-69	Embossed Tape	Yes
	Plug	87436-XX25	9-69	Tube	No
	Plug	87436-XX35*	9-69	Tube	No
	Plug	87436-XX45	9-69	Tube	Yes
	Plug	87436-XX55*	9-69	Tube	Yes
	Plug	87436-XX65	9-69	Embossed Tape	No
	Plug	87436-XX75*	9-69	Embossed Tape	No
	Plug	87436-XX85	9-69	Embossed Tape	Yes
	Plug	87436-XX95*	9-69	Embossed Tape	Yes
7.00 (.276) ZYTON	Receptacle	87433-XX20	9-69	Tube	No
	Receptacle	87433-XX30*	9-69	Tube	No
	Receptacle	87433-XX40	9-69	Tube	Yes
	Receptacle	87433-XX50*	9-69	Tube	Yes
	Receptacle	87433-XX60	9-69	Embossed Tape	No
	Receptacle	87433-XX62	9-69	Embossed Tape	No
	Receptacle	87433-XX70*	9-69	Embossed Tape	No
	Receptacle	87433-XX72*	9-69	Embossed Tape	No
	Receptacle	87433-XX80	9-69	Embossed Tape	Yes
	Receptacle	87433-XX90*	9-69	Embossed Tape	Yes
	Plug	87436-XX27	9-69	Tube	No
	Plug	87436-XX37*	9-69	Tube	No
	Plug	87436-XX47	9-69	Tube	Yes
	Plug	87436-XX57*	9-69	Tube	Yes
	Plug	87436-XX67	9-69	Embossed Tape	No
	Plug	87436-XX77*	9-69	Embossed Tape	No
	Plug	87436-XX87	9-69	Embossed Tape	Yes
	Plug	87436-XX97*	9-69	Embossed Tape	Yes

Stacking Height	Mating Types	Order No.	Circuits	Packaging	Vacuum Cover
8.00 (.315)	Receptacle	52584-XXX9	20-140	Tube	No
	Plug	53395-XXX9	20-140	Tube	No
9.00 (.354)	Receptacle	52584-XXX9	20-140	Tube	No
	Plug	53396-XXX9	100	Tube	No
10.00 (.394)	Receptacle	52584-XXX9	20-140	Tube	No
	Plug	53397-XXX9	20-140	Tube	No
12.00 (.472)	Receptacle	52602-XXX9	24-140	Tube	No
	Plug	53397-XXX9	50-140	Tube	No
18.00 (.709)	Receptacle	52584-XXX9	20-140	Tube	No
	Plug	53408-XXX9	24-140	Tube	No
20.00 (.787)	Receptacle	52602-XXX9	24-140	Tube	No
	Plug	53408-XXX9	24-140	Tube	No

1.00mm PITCH SMT STACKING HEIGHT OVERVIEW

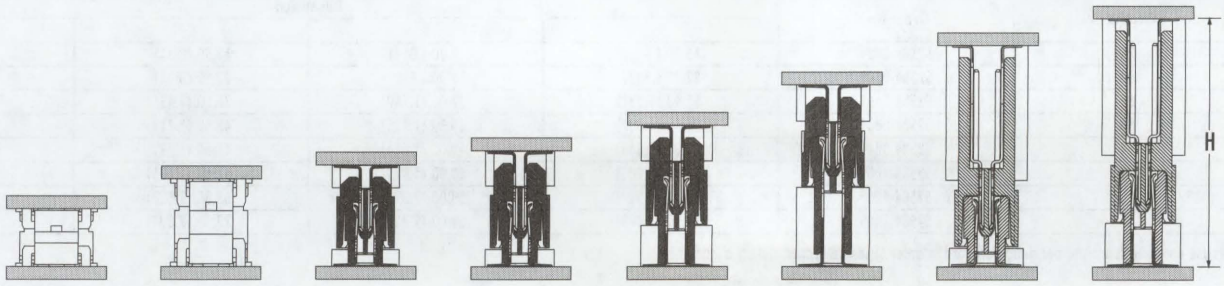

Stacking Height	5.00 (.197)	7.00 (.276)	8.00 (.315)	9.00 (.354)	10.00 (.394)	12.00 (.472)	18.00 (.709)	20.00 (.787)
Receptacle	87433	87433	52584	52584	52584	52584	52584	52602
Plug	87436	87436	53395	53396	53397	53397	53408	53408

1.00mm (.039") Pitch Board-to-Board Receptacle

52584

SMT, Dual Row Vertical Stacking

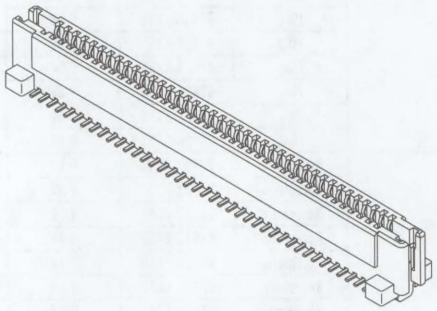

FEATURES AND SPECIFICATIONS

Features and Benefits

- Stacking heights: 8.0, 9.0, 10.0 and 18.0mm
- Sizes 20 to 140 circuits
- Leaf-style design protects pins
- Antiflux design
- Low insertion force
- Polarization pegs assist placement

Reference Information

Packaging: Tube
UL File No.: E29179
Mates With: 53395 (H=8.0mm)
53396 (H=9.0mm)
53397 (H=10.0mm)
53408 (H=18.0mm)
Designed In: Millimeters

Electrical

Voltage: 100V
Current: 0.5A
Contact Resistance: 40mΩ max. (H=8.0, 9.0, 10.0mm)
70mΩ max. (H=18.0mm)
Dielectric Withstanding Voltage: 200V AC
Insulation Resistance: 1000 MΩ min.

Physical

Housing: White glass-filled LCP, UL 94V-0
Contact: Phosphor Bronze
Plating: Gold (0.25μm min.) over Tin/Lead over Nickel
Operating Temperature: -55 to +85˚C

CATALOG DRAWING (FOR REFERENCE ONLY)

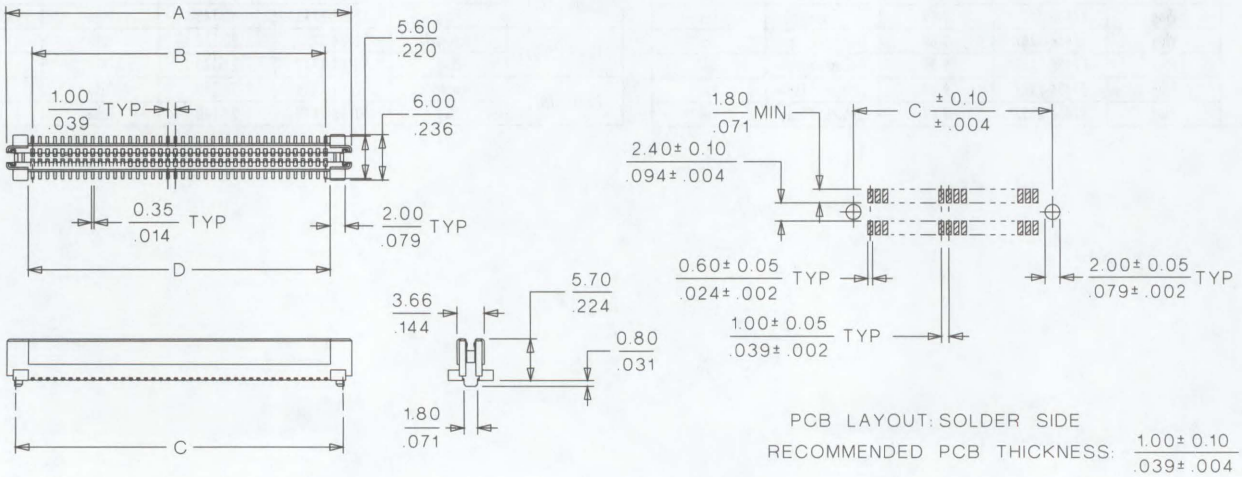

ORDERING INFORMATION AND DIMENSIONS

Circuits	Order No.	Dimension			
		A	B	C	D
20	52584-0209	15.90 (.626)	9.00 (.354)	13.50 (.531)	10.20 (.402)
34	52584-0349	22.90 (.902)	16.00 (.630)	20.50 (.807)	17.20 (.677)
66	52584-0669	38.90 (1.531)	32.00 (1.260)	36.50 (1.437)	33.20 (1.307)
80	52584-0809	45.90 (1.807)	39.00 (1.535)	43.50 (1.713)	40.20 (1.583)
84	52584-0849	47.90 (1.886)	41.00 (1.614)	45.50 (1.791)	42.20 (1.661)
100	52584-1009	55.90 (2.201)	49.00 (1.929)	53.50 (2.106)	50.20 (1.976)
120	52584-1209	65.90 (2.594)	59.00 (2.323)	63.50 (2.500)	60.20 (2.370)
140	52584-1409	75.90 (2.988)	69.00 (2.717)	73.50 (2.894)	70.20 (2.764)

Note: Use only one connector per daughterboard in order to insure proper mating alignment

1.00mm (.039") Pitch Board-to-Board Plug

53395

SMT, Dual Row Vertical Stacking

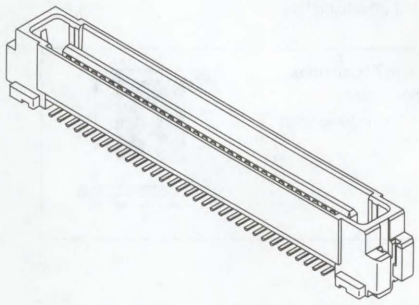

FEATURES AND SPECIFICATIONS

Features and Benefits

- Stacking heights: 8.0mm
- Sizes 20 to 140 circuits
- Leaf-style design protects pins
- Antiflux design
- Low insertion force
- Polarization pegs assist placement

Reference Information

Packaging: Tube
Mates With: 52584
Designed In: Millimeters

Mating Dimensions
53395 • 52584
H=8.0mm W=6.0mm

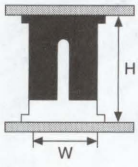

Electrical

Voltage: 100V
Current: 0.5A
Contact Resistance: 40mΩ max.
Dielectric Withstanding Voltage: 200V AC
Insulation Resistance: 1000 MΩ min.

Physical

Housing: White glass-filled LCP, UL 94V-0
Contact: Phosphor Bronze
Plating: Gold (0.25μm) over Tin/Lead over Nickel
Operating Temperature: -55 to +85°C

CATALOG DRAWING (FOR REFERENCE ONLY)

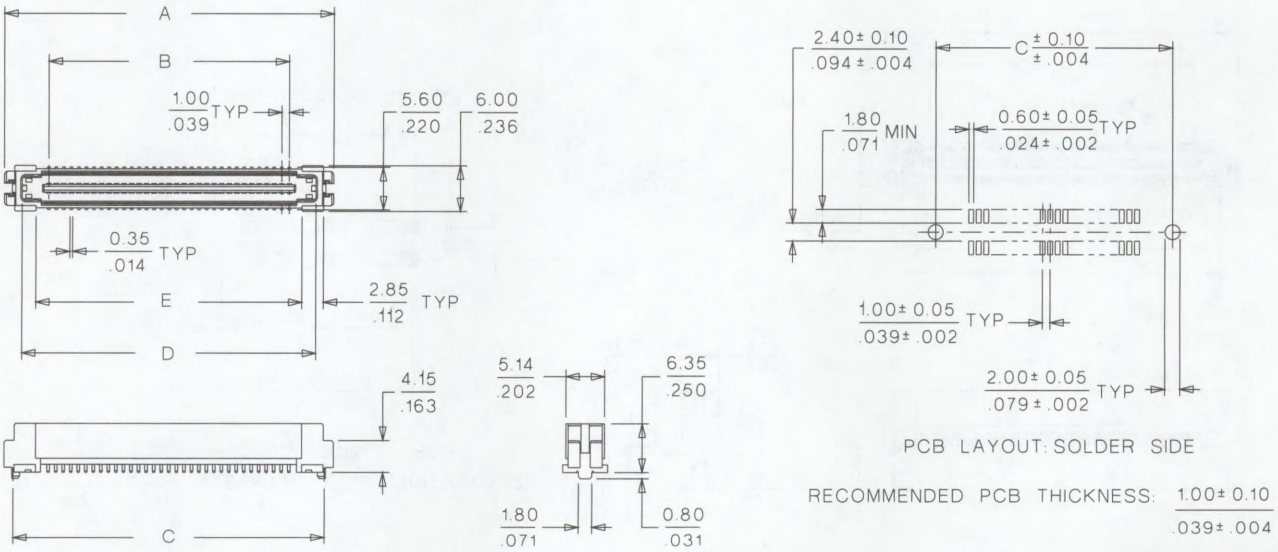

ORDERING INFORMATION AND DIMENSIONS

Circuits	Order No.	Dimension				
		A	B	C	D	E
20	53395-0209	20.80 (.819)	9.00 (.354)	18.40 (.724)	16.02 (.631)	12.40 (.488)
34	53395-0349	27.80 (1.094)	16.00 (.630)	25.40 (1.000)	23.02 (.906)	19.40 (.764)
66	53395-0669	43.80 (1.724)	32.00 (1.260)	41.40 (1.630)	39.02 (1.536)	35.40 (1.394)
100	53395-1009	60.80 (2.394)	49.00 (1.929)	58.40 (2.299)	56.02 (2.206)	52.40 (2.063)
140	53395-1409	80.80 (3.181)	69.00 (2.717)	78.40 (3.087)	76.02 (2.993)	72.40 (2.850)

Note: Use only one connector per daughterboard in order to insure proper mating alignment

1.00mm (.039") Pitch Board-to-Board Plug

53396

SMT, Dual Row Vertical Stacking

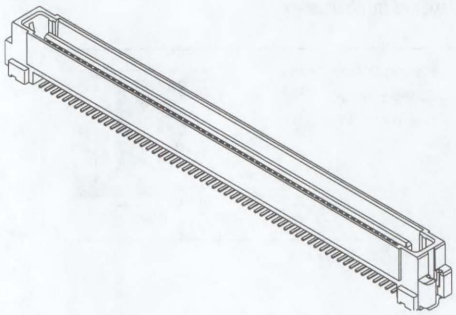

FEATURES AND SPECIFICATIONS

Features and Benefits

- Stacking heights: 9.0mm
- Sizes 100 circuits
- Leaf-style design protects pins
- Antiflux design
- Low insertion force
- Polarization pegs assist placement

Reference Information

Packaging: Tube
Mates With: 52584
Designed In: Millimeters

Mating Dimensions
53396 • 52584
H=9.0mm W=6.0mm

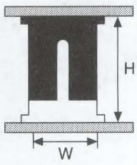

Electrical

Voltage: 100V
Current: 0.5A
Contact Resistance: Height 8 to 12mm—40mΩ max.
Height 13 to 16mm—55mΩ max.
Height 17 to 20mm—70mΩ max.
Dielectric Withstanding Voltage: 200V AC
Insulation Resistance: 1000 MΩ min.

Physical

Housing: White glass-filled LCP, UL 94V-0
Contact: Phosphor Bronze
Plating: Gold (0.25μm) over Tin/Lead over Nickel
Operating Temperature: -55 to +85°C

CATALOG DRAWING (FOR REFERENCE ONLY)

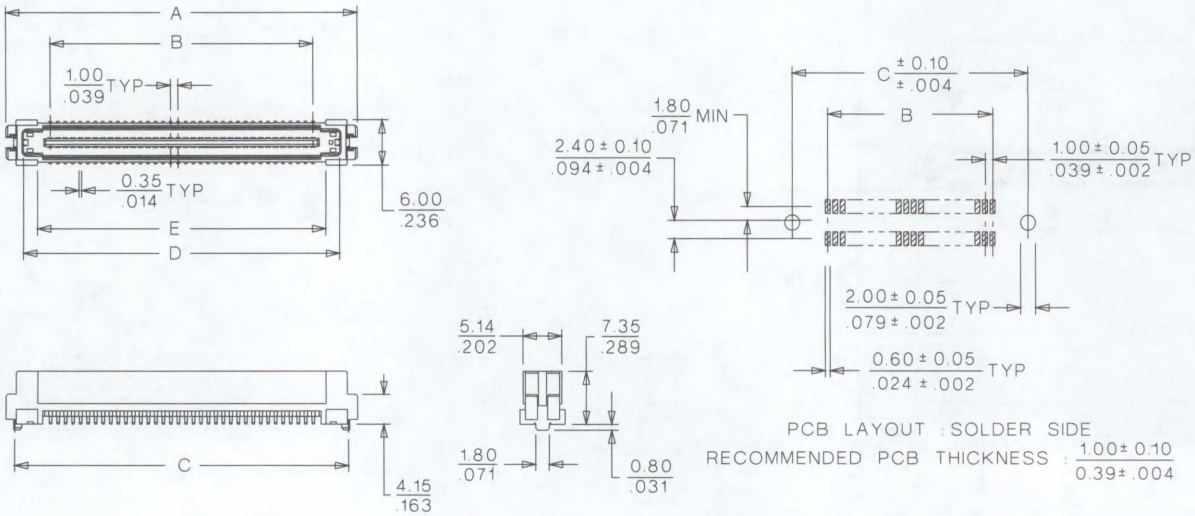

ORDERING INFORMATION AND DIMENSIONS

Circuits	Order No.	Dimension				
		A	B	C	D	E
100	53396-1009	60.80 (2.394)	49.00 (1.929)	58.40 (2.299)	56.02 (2.206)	52.40 (2.063)

Note: Use only one connector per daughterboard in order to insure proper mating alignment

1.00mm (.039") Pitch Board-to-Board Receptacle

52602

SMT, Dual Row Vertical Stacking

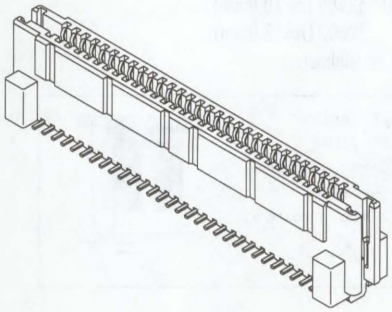

FEATURES AND SPECIFICATIONS

Features and Benefits

- Stacking heights: 12.0, 20.0mm
- Sizes 24 to 140 circuits
- Leaf-style design protects pins
- Antiflux design
- Low insertion force
- Polarization pegs assist placement

Reference Information

Packaging: Tube
Mates With: 53397 and 53408
Designed In: Millimeters

Electrical

Voltage: 100V
Current: 0.5A
Contact Resistance: 40mΩ max. (H=12.0mm)
70mΩ max. (H=20.0mm)
Dielectric Withstanding Voltage: 200V AC
Insulation Resistance: 1000 MΩ min.

Physical

Housing: White glass-filled LCP, UL 94V-0
Contact: Phosphor Bronze
Plating: Gold (0.25μm min.) over Tin/Lead over Nickel
Operating Temperature: -55 to +85°C

CATALOG DRAWING (FOR REFERENCE ONLY)

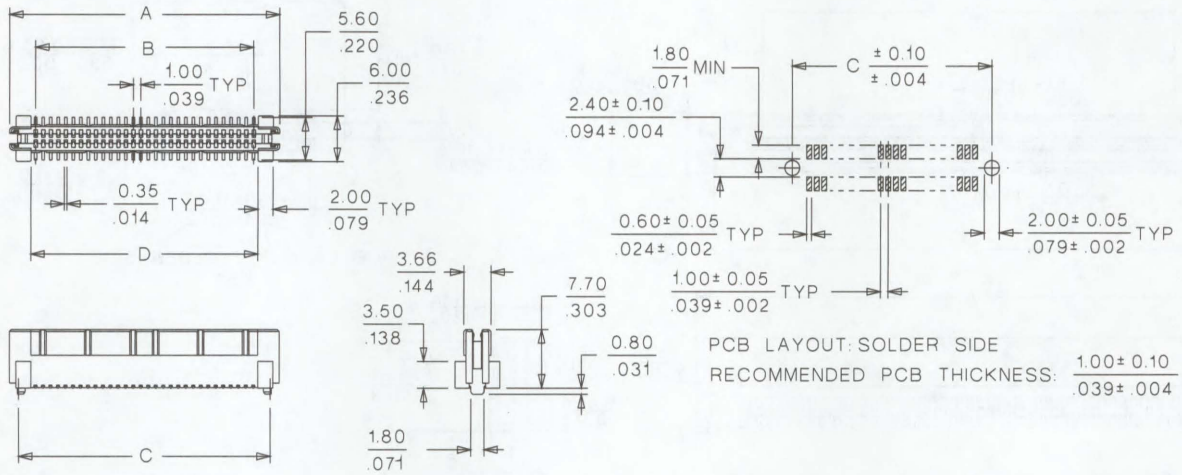

ORDERING INFORMATION AND DIMENSIONS

Circuits	Order No.	Dimension			
		A	B	C	D
24	52602-0249	17.90 (.705)	11.00 (.433)	15.50 (.610)	12.20 (.480)
50	52602-0509	30.90 (1.217)	24.00 (.945)	28.50 (1.122)	25.20 (.992)
60	52602-0609	35.90 (1.413)	29.00 (1.142)	33.50 (1.319)	30.20 (1.189)
120	52602-1209	65.90 (2.594)	59.00 (2.323)	63.50 (2.500)	60.20 (2.370)
140	52602-1409	75.90 (2.988)	69.00 (2.717)	73.50 (2.894)	70.20 (2.764)

Note: Use only one connector per daughterboard in order to insure proper mating alignment

1.00mm (.039") Pitch Board-to-Board Plug

53397

SMT, Dual Row Vertical Stacking

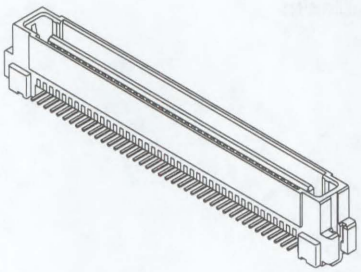

FEATURES AND SPECIFICATIONS

Features and Benefits

- Stacking heights: 10.0, 12.0mm
- Sizes 50 to140 circuits
- Leaf-style design protects pins
- Antiflux design
- Low insertion force
- Polarization pegs assist placement

Reference Information

Packaging: Tube
UL File No.: E29179
Mates With: 52584 (H=10.0mm)
52602 (H=12.0mm)
Designed In: Millimeters

Mating Dimensions
1. 53397 • 52584
H=10.0mm W=6.0mm
2. 53397 • 52602
H=12.0mm W=6.0mm

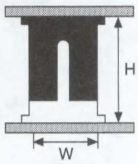

Electrical

Voltage: 100V
Current: 0.5A
Contact Resistance: Height 8 to 12mm—40mΩ max.
Height 13 to 16mm—55mΩ max.
Height 17 to 20mm—70mΩ max.
Dielectric Withstanding Voltage: 200V AC
Insulation Resistance: 1000 MΩ min.

Physical

Housing: White glass-filled LCP, UL 94V-0
Contact: Phosphor Bronze
Plating: Gold (0.25μm) over Tin/Lead over Nickel
Operating Temperature: -55 to +85°C

CATALOG DRAWING (FOR REFERENCE ONLY)

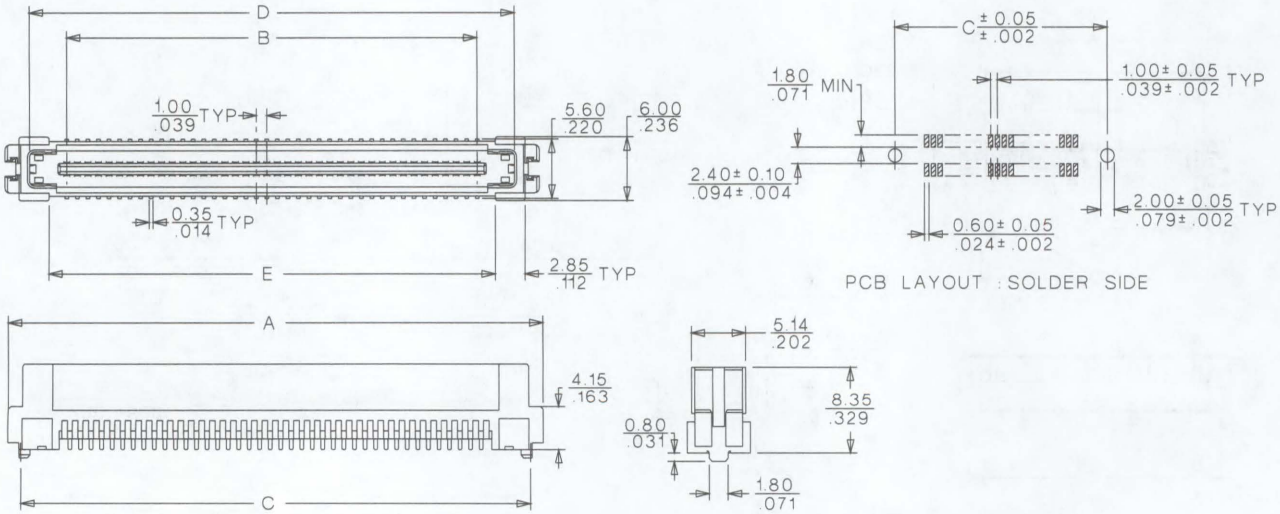

ORDERING INFORMATION AND DIMENSIONS

Circuits	Order No.	Dimension				
		A	B	C	D	E
50	53397-0509	35.80 (1.409)	24.00 (.945)	33.40 (1.315)	31.02 (1.221)	27.40 (1.079)
80	53397-0809	50.80 (2.000)	39.00 (1.535)	48.40 (1.906)	46.02 (1.812)	42.40 (1.669)
84	53397-0849	52.80 (2.079)	41.00 (1.614)	50.40 (1.984)	48.02 (1.891)	44.40 (1.748)
100	53397-1009	60.80 (2.394)	49.00 (1.929)	58.40 (2.299)	56.02 (2.206)	52.40 (2.063)
120	53397-1209	70.80 (2.787)	59.00 (2.323)	68.40 (2.693)	66.02 (2.599)	62.40 (2.457)
140	53397-1409	80.80 (3.181)	69.00 (2.717)	78.40 (3.087)	76.02 (2.993)	72.40 (2.850)

Note: Use only one connector per daughterboard in order to insure proper mating alignment

1.00mm (.039") Pitch Board-to-Board Plug

53408

SMT, Dual Row Vertical Stacking

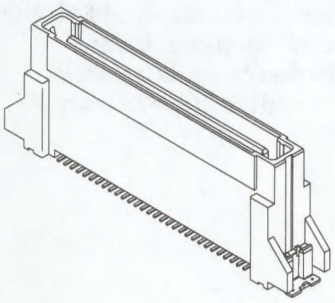

FEATURES AND SPECIFICATIONS

Features and Benefits

- Stacking heights: 18.0, 20.0mm
- Sizes 24 to 140 circuits
- Leaf-style design protects pins
- Antiflux design
- Low insertion force
- Polarization pegs assist placement

Reference Information

Packaging: Tube
Mates With: 52584 (H=18.0mm)
52602 (H=20.0mm)
Designed In: Millimeters

Mating Dimensions

1. 53408 • 52584
   H=18.0mm W=6.6mm
2. 53408 • 52602
   H=20.0mm W=6.6mm

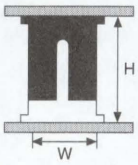

Electrical

Voltage: 100V
Current: 0.5A
Contact Resistance: 70mΩ max.
Dielectric Withstanding Voltage: 200V AC
Insulation Resistance: 1000 MΩ min.

Physical

Housing: White glass-filled LCP, UL 94V-0
Contact: Phosphor Bronze
Plating: Gold (0.25μm) over Tin/Lead over Nickel
Operating Temperature: -55 to +85°C

CATALOG DRAWING (FOR REFERENCE ONLY)

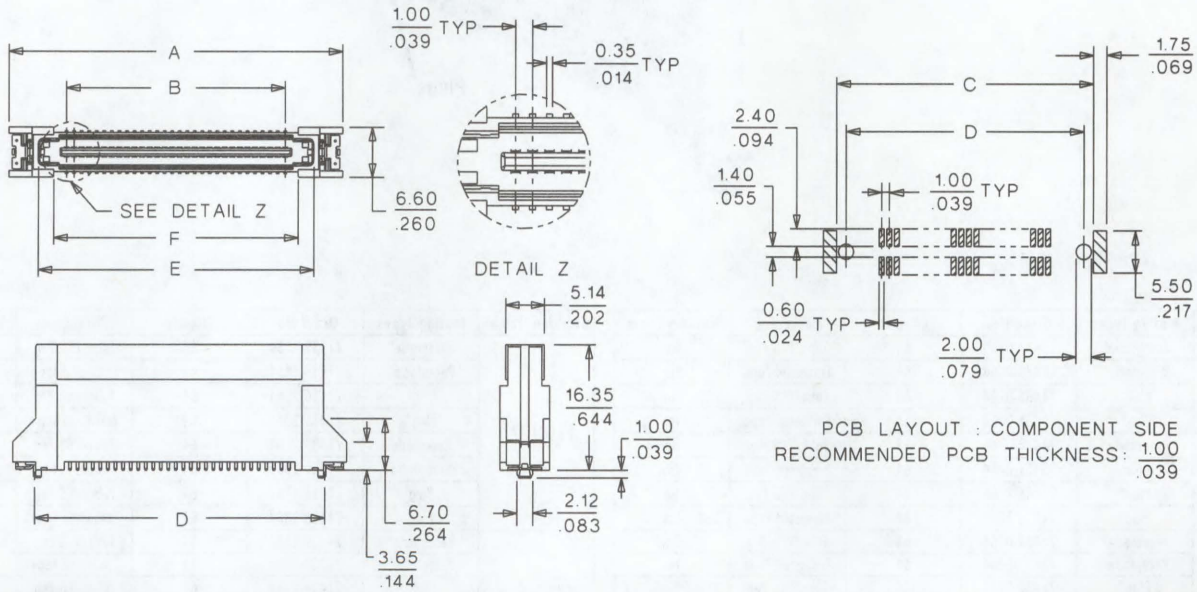

ORDERING INFORMATION AND DIMENSIONS

Circuits	Order No.	Dimension					
		A	B	C	D	E	F
24	53408-0249	26.20 (1.031)	11.00 (.433)	22.90 (.902)	20.40 (.803)	18.02 (.709)	14.40 (.567)
50	53408-0509	39.20 (1.543)	24.00 (.945)	35.90 (1.413)	33.40 (1.315)	31.02 (1.221)	27.40 (1.709)
60	53408-0609	44.20 (1.740)	29.00 (1.142)	40.90 (1.610)	38.40 (1.512)	36.02 (1.418)	32.40 (1.276)
80	53408-0809	54.20 (2.134)	39.00 (1.535)	50.90 (2.004)	48.40 (1.906)	46.02 (1.812)	42.40 (1.669)
100	53408-1009	64.20 (2.528)	49.00 (1.929)	60.90 (2.398)	58.40 (2.299)	56.02 (2.206)	52.40 (2.063)
120	53408-1209	74.20 (2.921)	59.00 (2.323)	70.90 (2.791)	68.40 (2.693)	66.02 (2.599)	62.40 (2.457)
140	53408-1409	84.20 (3.314)	69.00 (2.716)	80.90 (3.190)	78.40 (3.087)	76.02 (2.933)	72.40 (2.850)

Note: Use only one connector per daughterboard in order to insure proper mating alignment

1.00mm (.039") Pitch Mezzanine IEEE 1386 SMT Stacking Board-to-Board Connectors

The IEEE P1386 Standard contains the details for adding standardized general option, PCI and S-bus mezzanine cards to VMEbus and Multibus host boards. There are also many LAN, WAN, telecommunications, PC and workstation users who want a standardized mezzanine scheme, and see the IEEE P1386 as the best approach.

Molex's fully shrouded leaf-style design minimizes the chance of damaging plug contacts, and our receptacle contacts feature a low mating force, reducing PC board stress. Gold-over-Nickel contact plating enhances long-term reliability and UL 94V-0 LCP housings withstand SMT reflow processes. Excellent tolerance absorption allows the connector to be used in combinations of 1-4 mated pairs for up to 256 circuits.

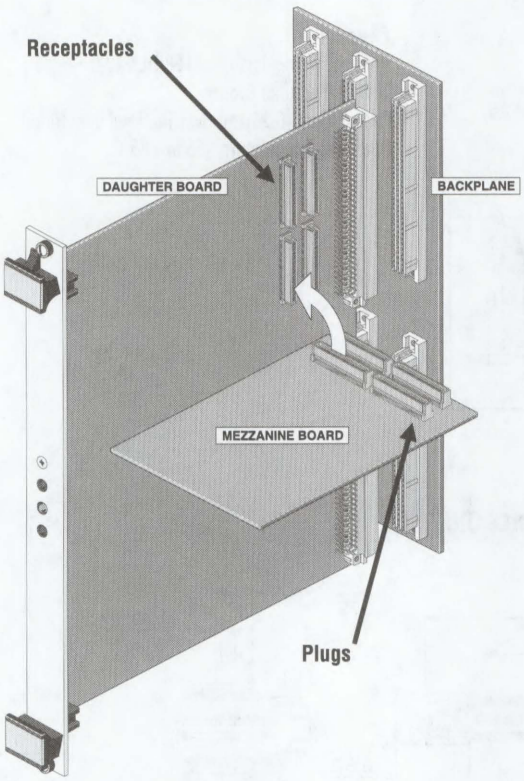

Stacking Height	Mating Types	Order No.	Circuits	Packaging	Vacuum Cover
8.00 (.315)	Receptacle*	71439-0164	64	Tube/PCB Peg	No
	Receptacle*	71439-0864	64	Embossed Tape	Yes
	Plug*	71436-0164	64	Tube/PCB Peg	No
	Plug*	71436-0864	64	Embossed Tape	Yes
9.00 (.354)	Receptacle*	71439-0164	64	Tube/PCB Peg	No
	Receptacle*	71439-0864	64	Embossed Tape	Yes
	Plug*	71436-1164	64	Tube/PCB Peg	No
	Plug*	71436-1864	64	Embossed Tape	Yes
10.00 (.394)	Receptacle*	71439-0164	64	Tube/PCB Peg	No
	Receptacle*	71439-0864	64	Embossed Tape	Yes
	Plug*	71436-2164	64	Tube/PCB Peg	No
	Plug*	71436-2864	64	Embossed Tape	Yes
	Receptacle	71439-1164	64	Tube/PCB Peg	No
	Receptacle	71439-1864	64	Embossed Tape	Yes
	Plug	71436-0164	64	Tube/PCB Peg	No
	Plug	71436-0864	64	Embossed Tape	Yes
11.00 (.433)	Receptacle*	71439-1164	64	Tube/PCB Peg	No
	Receptacle*	71439-1864	64	Embossed Tape	Yes
	Plug*	71436-1164	64	Tube/PCB Peg	No
	Plug*	71436-1864	64	Embossed Tape	Yes
	Receptacle	71439-2164	64	Tube/PCB Peg	No
	Receptacle	71439-2864	64	Embossed Tape	Yes
	Plug	71436-0164	64	Tube/PCB Peg	No
	Plug	71436-0864	64	Embossed Tape	Yes

Stacking Height	Mating Types	Order No.	Circuits	Packaging	Vacuum Cover
12.00 (.472)	Receptacle*	71439-1164	64	Tube/PCB Peg	No
	Receptacle*	71439-1864	64	Embossed Tape	Yes
	Plug*	71436-2164	64	Tube/PCB Peg	No
	Plug*	71436-2864	64	Embossed Tape	Yes
	Receptacle	71439-2164	64	Tube/PCB Peg	No
	Receptacle	71439-2864	64	Embossed Tape	Yes
	Plug	71436-1164	64	Tube/PCB Peg	No
	Plug	71436-1864	64	Embossed Tape	Yes
13.00 (.512)	Receptacle*	71439-2164	64	Tube/PCB Peg	No
	Receptacle*	71439-2864	64	Embossed Tape	Yes
	Plug*	71436-2164	64	Tube/PCB Peg	No
	Plug*	71436-2864	64	Embossed Tape	Yes
	Receptacle	71439-3164	64	Tube/PCB Peg	No
	Receptacle	71439-3864	64	Embossed Tape	Yes
	Plug	71436-0164	64	Tube/PCB Peg	No
	Plug	71436-0864	64	Embossed Tape	Yes
14.00 (.552)	Receptacle*	71439-3164	64	Tube/PCB Peg	No
	Receptacle*	71439-3864	64	Embossed Tape	Yes
	Plug*	71436-1164	64	Tube/PCB Peg	No
	Plug*	71436-1864	64	Embossed Tape	Yes
15.00 (.591)	Receptacle*	71439-3164	64	Tube/PCB Peg	No
	Receptacle*	71439-3864	64	Embossed Tape	Yes
	Plug*	71436-2164	64	Tube/PCB Peg	No
	Plug*	71436-2864	64	Embossed Tape	Yes

* Recommended plug/receptacle combination for mated stack height per EIA Standard 700 AAAB

1.00mm (.039") Mezzanine IEEE 1386 Board-to-Board Receptacle

71439

Dual Row, SMT Vertical Stacking

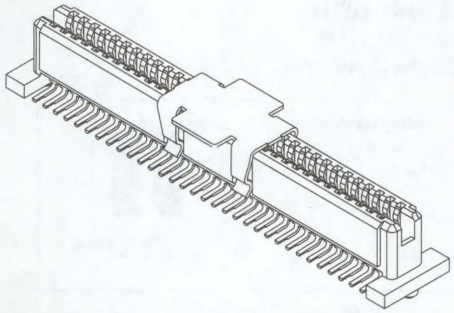

FEATURES AND SPECIFICATIONS

Features and Benefits

- Mated heights: 8, 9, 10, 11, 12, 13, 14 and 15mm
- Size 64 circuits
- Leaf-style design protects pins
- Antiflux design
- Low insertion force
- High-temperature LCP housing for use with reflow solder processes

Reference Information

Product Specification: 71436-9999
Packaging: Tube or tape and reel
UL File No.: E29179
Mates With: 71436
Designed In: Millimeters

Electrical

Voltage: 100V
Current: 1.0A
Contact Resistance: 30mΩ max.
Dielectric Withstanding Voltage: 250V
Insulation Resistance: 1000 MΩ min.

Mechanical

Contact Retention to Housing: 0.4kgf min.
Mating Force: 50g max. per contact
Unmating Force: 25g min. per contact

Physical

Housing: Glass-filled LCP, UL 94V-0
Contact: Phosphor Bronze
Plating: 30μ" Gold min.
Operating Temperature: -55 to +85°C

CATALOG DRAWING (FOR REFERENCE ONLY)

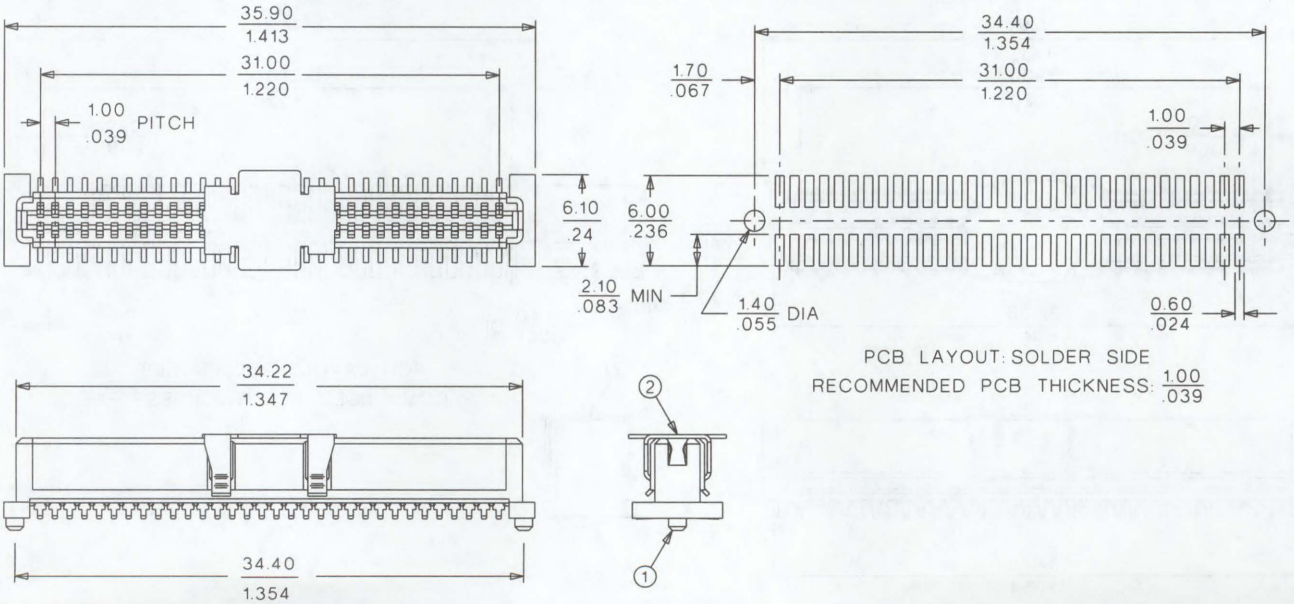

ORDERING INFORMATION AND DIMENSIONS

Circuits	Order No.				Mated Stack Height*
	Tube Pack (with PCB Pegs, without Pick and Place Cap)		Tape Pack (without PCB Pegs, with Pick and Place Cap)		
	Plug	Receptacle	Plug	Receptacle	
64	71436-0164	71439-0164	71436-0864	71439-0864	8.00 (.315)
	71436-1164	71439-0164	71436-1864	71439-0864	9.00 (.354)
	71436-2164	71439-0164	71436-2864	71439-0864	10.00 (.394)
	71436-1164	71439-1164	71436-1864	71439-1864	11.00 (.433)
	71436-2164	71439-1164	71436-2864	71439-1864	12.00 (.472)
	71436-2164	71439-2164	71436-2864	71439-2864	13.00 (.512)
	71436-1164	71439-3164	71436-1864	71439-3864	14.00 (.551)
	71436-2164	71439-3164	71436-2864	71439-3864	15.00 (.591)

* Recommended Plug/Receptacle combination for mated stack height per EIA standard 700 AAAB. Also per EIA standard, board stack height measured from facing surfaces of parallel circuit boards includes solder thickness of 0.1mm (.004") per side.

Note: Other options available such as PCB pegs in tape pack, and Pick and Place Cap in tube pack

1.00mm (.039") Mezzanine IEEE 1386 Board-to-Board Plug

71436

Dual Row, SMT Vertical Stacking

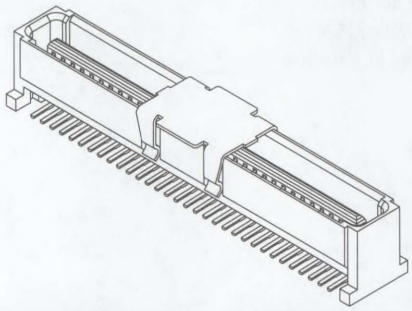

FEATURES AND SPECIFICATIONS

Features and Benefits

- Mated heights: 8, 9, 10, 11, 12, 13, 14 and 15mm
- Size 64 circuits
- Leaf-style design protects pins
- Antiflux design
- Low insertion force
- High-temperature LCP housing for use with reflow solder processes

Reference Information

Product Specification: 71436-9999
Packaging: Tube or tape and reel
UL File No.: E29179
Mates With: 71439
Designed In: Millimeters

Mating Dimensions
71436 • 71439
H=8.0 – 15.0mm W=6.10mm

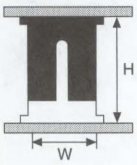

Electrical

Voltage: 100V
Current: 1.0A
Contact Resistance: 30mΩ max.
Dielectric Withstanding Voltage: 250V
Insulation Resistance: 1000 MΩ min.

Mechanical

Contact Retention to Housing: 0.4kgf min.
Mating Force: 50g max. per contact
Unmating Force: 25g min. per contact

Physical

Housing: Glass-filled LCP, UL 94V-0
Contact: Phosphor Bronze
Plating: 30μ" Gold min.
Operating Temperature: -55 to +85°C

CATALOG DRAWING (FOR REFERENCE ONLY)

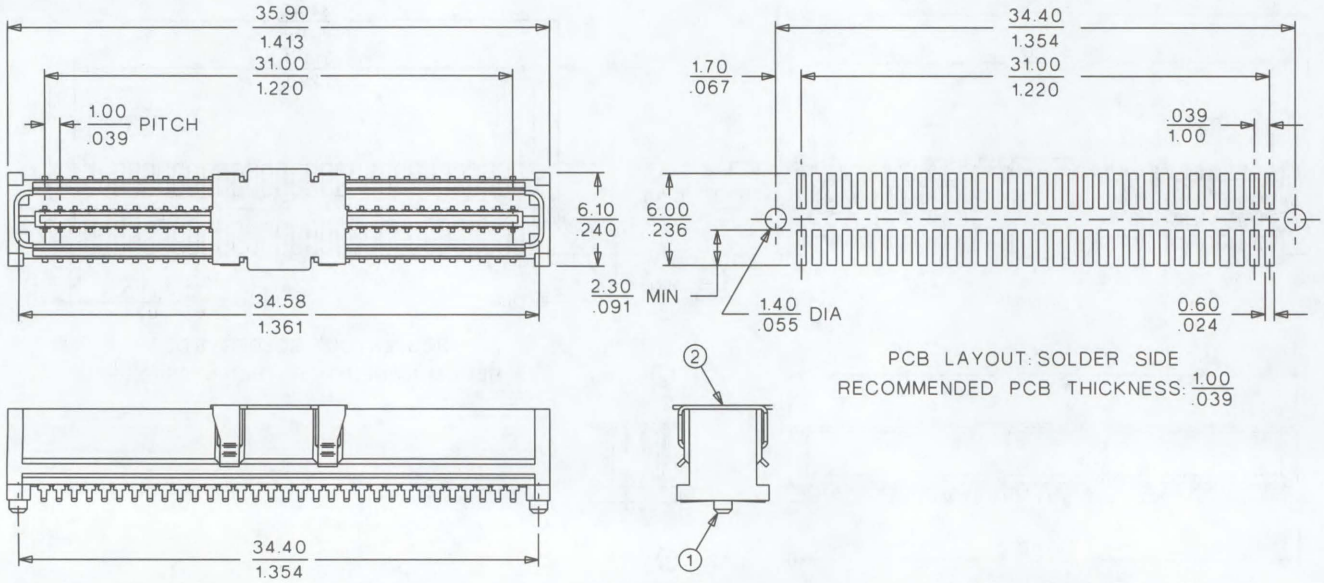

ORDERING INFORMATION AND DIMENSIONS

Circuits	Order No.				Mated Stack Height*
	Tube Pack (with PCB Pegs, without Pick and Place Cap)		Tape Pack (without PCB Pegs, with Pick and Place Cap)		
	Plug	Receptacle	Plug	Receptacle	
64	71436-0164	71439-0164	71436-0864	71439-0864	8.00 (.315)
	71436-1164	71439-0164	71436-1864	71439-0864	9.00 (.354)
	71436-2164	71439-0164	71436-2864	71439-0864	10.00 (.394)
	71436-1164	71439-1164	71436-1864	71439-1864	11.00 (.433)
	71436-2164	71439-1164	71436-2864	71439-1864	12.00 (.472)
	71436-2164	71439-2164	71436-2864	71439-2864	13.00 (.512)
	71436-1164	71439-3164	71436-1864	71439-3864	14.00 (.551)
	71436-2164	71439-3164	71436-2864	71439-3864	15.00 (.591)

* Recommended Plug/Receptacle combination for mated stack height per EIA standard 700 AAAB. Also per EIA standard, board stack height measured from facing surfaces of parallel circuit boards includes solder thickness of 0.1mm (.004") per side.

Note: Other options available such as PCB pegs in tape pack, and Pick and Place Cap in tube pack

1.00mm (.039") Mezzanine Board-to-Board Receptacle

71742

Dual Row, SMT Vertical Stacking

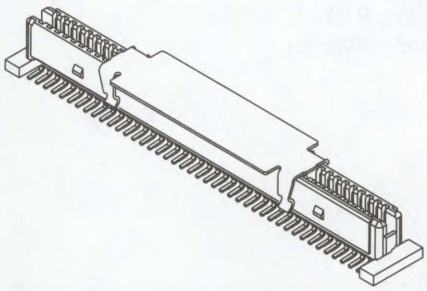

FEATURES AND SPECIFICATIONS

Features and Benefits

- Mated heights: 10 and 15mm
- Leaf-style design protects pins
- Antiflux design
- Low insertion force
- High-temperature LCP housing for use with reflow solder processes

Reference Information

Product Specification: 71741-9999
Packaging: Tube or tape and reel
UL File No.: E29179
Mates With: 71741
Designed In: Millimeters

Electrical

Voltage: 100V
Current: 1.0A
Contact Resistance: 40mΩ max.
Dielectric Withstanding Voltage: 250V
Insulation Resistance: 1000 MΩ min.

Mechanical

Contact Retention to Housing: 0.4kgf min.
Mating Force: 50g max.
Unmating Force: 25g min.

Physical

Housing: Glass-filled LCP, UL 94V-0
Contact: Phosphor Bronze
Plating: 30μ" and 10μ"Gold min.
Operating Temperature: -55 to +85°C

CATALOG DRAWING (FOR REFERENCE ONLY)

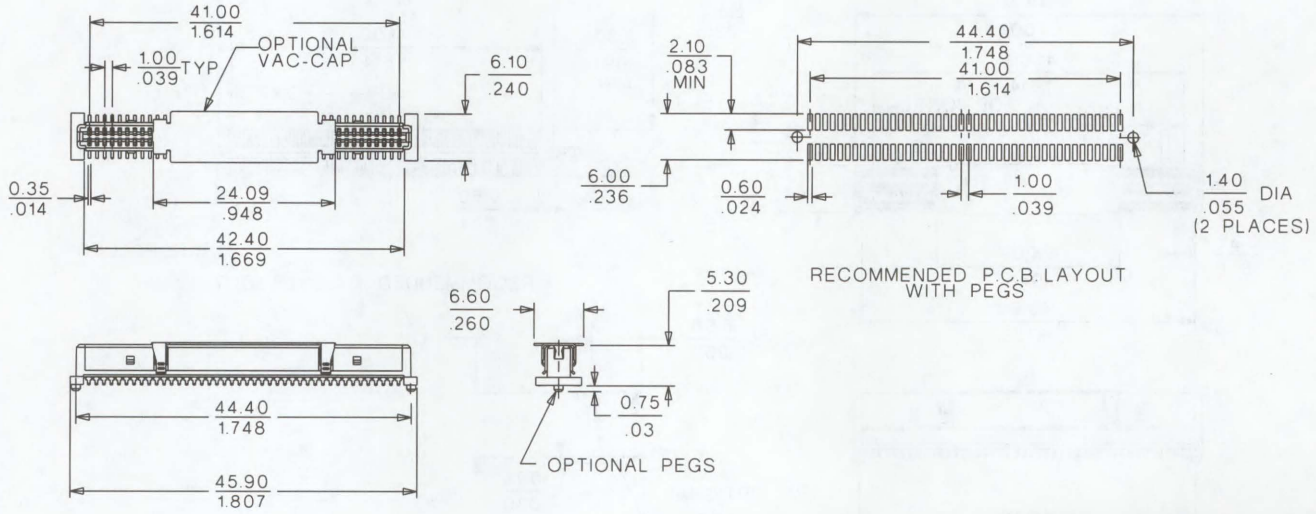

ORDERING INFORMATION AND DIMENSIONS

Circuits	Order No.	Pegs	Pick and Place Cap	Packaging	Plating	Mating Plug	Mated Stack Height*
84	71742-0001	No	Yes	Tape and Reel	10μ"	71741-0XXX	10.00 (.394)
	71742-0003	Yes	Yes	Tape and Reel	10μ"	71741-0XXX	10.00 (.394)
	71742-0004	Yes	No	Tube	10μ"	71741-0XXX	10.00 (.394)
	71742-0005	No	Yes	Tape and Reel	30μ"	71741-0XXX	10.00 (.394)
	71742-3001	No	Yes	Tape and Reel	10μ"	71741-0XXX	15.00 (.591)
	71742-3003	Yes	Yes	Tape and Reel	10μ"	71741-0XXX	15.00 (.591)

* Board stack height measured from facing surfaces of parallel circuit boards includes solder thickness of 0.1mm (.004") per side

1.00mm (.039") Mezzanine Board-to-Board Plug

71741

Dual Row, SMT Vertical Stacking

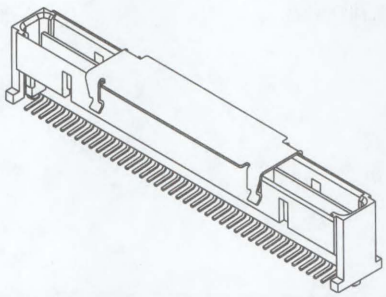

FEATURES AND SPECIFICATIONS

Features and Benefits

- Mated heights: 8, 10, 13 and 15mm
- Leaf-style design protects pins
- Antiflux design
- Low insertion force
- High-temperature LCP housing for use with reflow solder processes
- Optional pick and place cap for robotic placement on PCB

Reference Information

Product Specification: 71741-9999
Packaging: Tube or tape and reel
UL File No.: E29179
Mates With: 71742
Designed In: Millimeters

Electrical

Voltage: 100V
Current: 1.0A
Contact Resistance: 40mΩ max.
Dielectric Withstanding Voltage: 250V
Insulation Resistance: 1000 MΩ min.

Mechanical

Contact Retention to Housing: 0.4kgf min.
Mating Force: 50g max.
Unmating Force: 25g min.

Physical

Housing: Glass-filled LCP, UL 94V-0
Contact: Phosphor Bronze
Plating: 30μ" and 10μ" Gold min.
Operating Temperature: -55 to +85°C

CATALOG DRAWING (FOR REFERENCE ONLY)

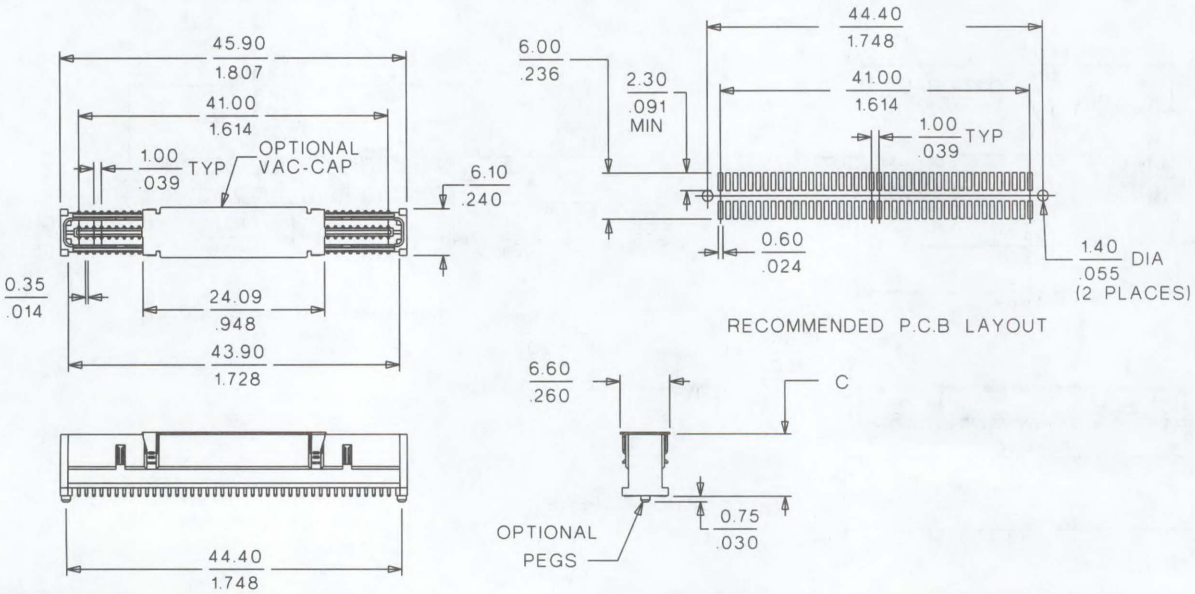

ORDERING INFORMATION AND DIMENSIONS

Circuits	Order No.	Pegs	Pick and Place Cap	Packaging	Plating	Dimension C	Mating Receptacle	Mated Stack Height*
84	71741-0001	Yes	No	Tube	10μ"	8.35 (.329)	71742-0XXX	10.00 (.394)
							71742-3XXX	15.00 (.591)
	71741-0002	Yes	Yes	Tape and Reel	10μ"	8.35 (.329)	71742-0XXX	10.00 (.394)
							71742-3XXX	15.00 (.591)
	71741-0003	No	Yes	Tape and Reel	30μ"	8.35 (.329)	71742-0XXX	10.00 (.394)
							71742-3XXX	15.00 (.591)
	71741-2001	Yes	Yes	Tape and Reel	30μ"	6.35 (.250)	71742-0XXX	8.00 (.315)
							71742-3XXX	13.00 (.512)
	71741-2002	No	Yes	Tape and Reel	30μ"	6.35 (.250)	71742-0XXX	8.00 (.315)
							71742-3XXX	13.00 (.512)

* Board stack height measured from facing surfaces of parallel circuit boards includes solder thickness of 0.1mm (.004") per side

1.00mm (.039") Pitch Board-to-Board Compression Connector

54436

SMT, One-Piece Design 0.60mm (.024") Height

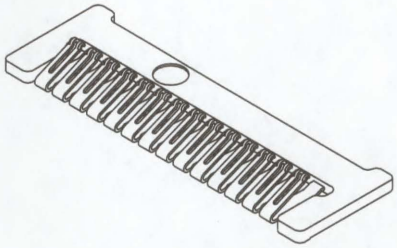

FEATURES AND SPECIFICATIONS

Features and Benefits

- Sizes 14 circuits
- Ultra low-profile for tight packaging applications
- Can mate with FFC or PCB
- One-piece design for cost-effective assembly
- Bifurcated contact for good electrical reliability
- Positioning peg assists placement on PCB

Reference Information

Product Specification: PS-54436-005
Packaging: Embossed tape
Designed In: Millimeters

Electrical

Voltage: 50V
Current: 0.5A
Contact Resistance: 30mΩ max.
Dielectric Withstanding Voltage: 250V AC/1 min.
Insulation Resistance: 100 MΩ min.

Physical

Housing: LCP, UL 94V-0
Contact: Phosphor Bronze
Plating: Contact Area—0.50μm (20μ") Gold
Underplating—Nickel
Operating Temperature: -40 to +85°C

CATALOG DRAWING (FOR REFERENCE ONLY)

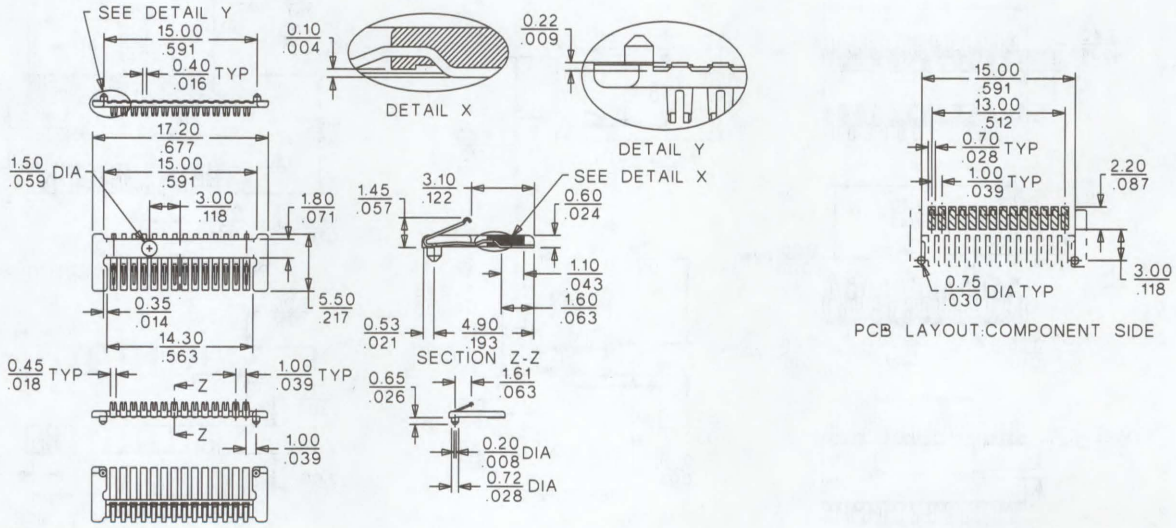

ORDERING INFORMATION AND DIMENSIONS

Circuits	Order No.	Carrier Tape Width
14	54436-1490	32.00 (1.260)

1.20mm (.047") Pitch Board-to-Board Compression Connector

54546

SMT, One-Piece Design 2.10mm (.083") Height

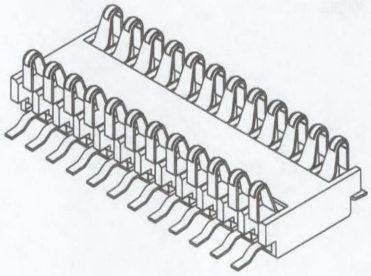

FEATURES AND SPECIFICATIONS

Features and Benefits

- Sizes 32, 34, 36, 38 and 40 circuits
- Can mate with FFC or PCB
- One-piece design for cost-effective assembly
- Dual-row opposing contact design for stable contact forces
- Positioning peg assists placement on PCB

Reference Information

Product Specification: PS-54546-007
Packaging: Embossed tape
Designed In: Millimeters

Electrical

Voltage: 50V
Current: 0.5A
Contact Resistance: 30mΩ max.
Dielectric Withstanding Voltage: 500V AC/1 min.
Insulation Resistance: 100 MΩ min.

Physical

Housing: Black LCP, UL 94V-0
Contact: Phosphor Bronze
Plating: Contact Area—0.50μm (20μ") Gold
Solder Tail Area—3.00μm (118μ") Tin/Lead
Underplating—Nickel
Operating Temperature: -40 to +85°C

CATALOG DRAWING (FOR REFERENCE ONLY)

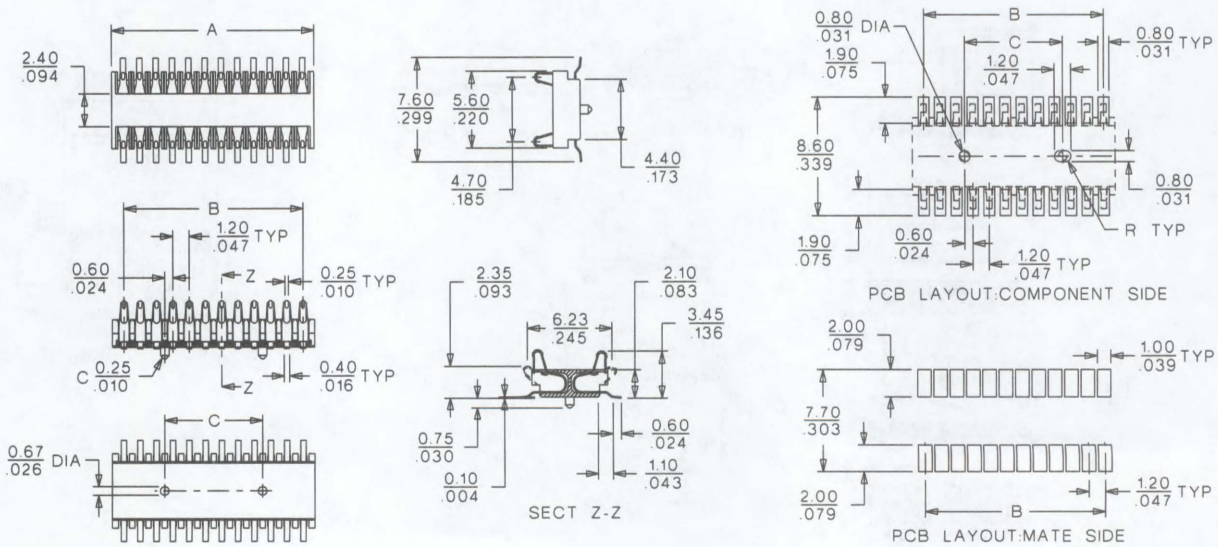

ORDERING INFORMATION AND DIMENSIONS

Circuits	Order No.	Dimension			Carrier Tape Width
		A	B	C	
32	54546-3290	19.70 (.776)	18.00 (.709)	12.00 (.472)	32.00 (1.260)
34	54546-3490	20.90 (.823)	19.20 (.756)	13.20 (.520)	44.00 (1.732)
36	54546-3690	22.10 (.870)	20.40 (.803)	14.40 (.567)	44.00 (1.732)
38	54546-3890	23.30 (.917)	21.60 (.850)	15.60 (.614)	44.00 (1.732)
40	54546-4090	24.50 (.965)	22.80 (.898)	16.80 (.661)	44.00 (1.732)

1.40mm (.055") Pitch Board-to-Board Compression Connector

54612

SMT, One-Piece Design 0.40mm (.016") Height

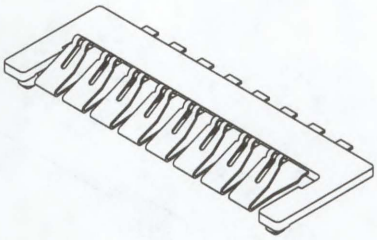

FEATURES AND SPECIFICATIONS

Features and Benefits

- Sizes 8 circuits
- Ultra low-profile for tight packaging needs
- One-piece design for cost-effective assembly
- Bifurcated contact for good electrical reliability
- Locating pegs for placement assistance
- Visible solder tails for easy solder-joint inspection

Reference Information

Product Specification: Contact Molex
Packaging: Embossed tape
Designed In: Millimeters

Electrical

Voltage: 50V
Current: 0.5A
Contact Resistance: 30mΩ max.
Dielectric Withstanding Voltage: 250V AC/1 min.
Insulation Resistance: 100 MΩ min.

Physical

Housing: LCP, UL 94V-0
Contact: Phosphor Bronze
Plating: Contact Area—.018 to .022μ" Gold
Underplating—Nickel
Operating Temperature: -40 to +85°C

CATALOG DRAWING (FOR REFERENCE ONLY)

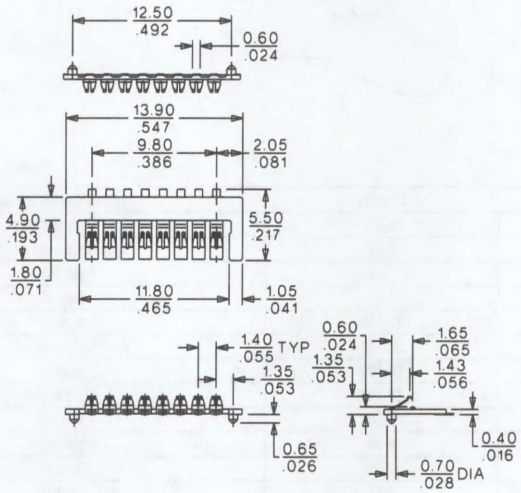

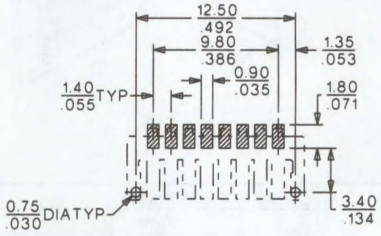

PCB LAYOUT : COMPONENT SIDE

ORDERING INFORMATION AND DIMENSIONS

Circuits	Order No.	Carrier Tape Width
8	54612-0890	24.00 (.945)

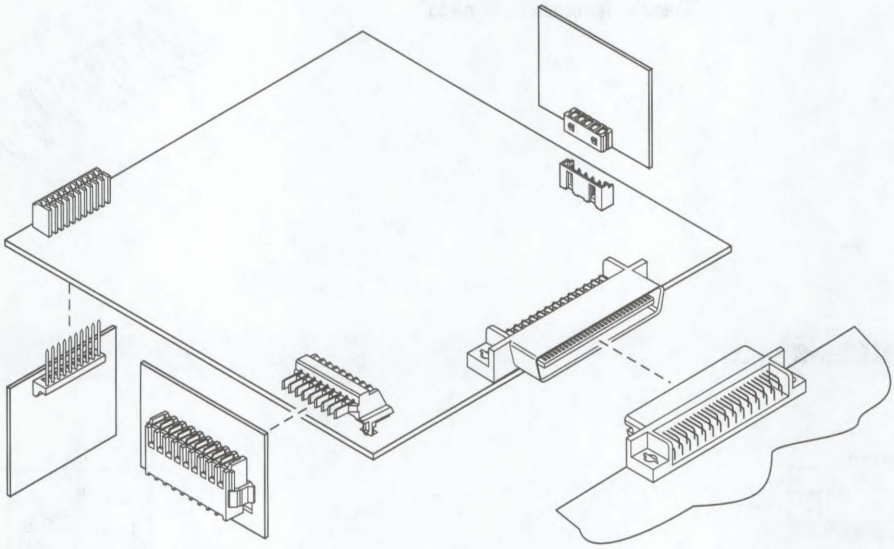

Pitch	Description	Plating	Circuits	Mating Configuration
1.25 (.049)	Hinged	Tin	8-30	Right Angle and Vertical
	Hinged	Tin	8-30	Right Angle and Vertical
	Radial Tape	Tin	7-14	Right Angle
	Radial Tape	Tin	7-14	Vertical
1.27 (.050)	D-50L	Gold	20-100	Vertical
	D-50L	Gold	20-100	Right Angle
	D-50L	Gold	20-100	Vertical
	D-50L	Gold	20-100	Right Angle
1.50 (.059)	Dual Row	Tin	6-30	Vertical
	Dual Row	Tin	6-30	Right Angle
	Single Row	Tin	4-15	Vertical
	Single Row	Tin	4-15	Vertical
	Single Row - Flexible	Tin	16	Right Angle
	Single Row - Flexible	Tin	16	Right Angle
1.60 (.063)	Panel Detachable	Gold	8	Right Angle
	Panel Detachable	Gold	8	Vertical
	Panel Detachable	Gold	12	Right Angle
	Panel Detachable	Gold	12	Right Angle
2.00 (.079)	Single Row	Tin	4-20	Right Angle
	Single Row	Tin	4-20	Vertical
	Single Row	Tin	4-20	Vertical
	Dual Row	Tin	6-40	Right Angle
	Dual Row	Tin	6-40	Vertical
	Dual Row	Tin	6-30	Vertical
	Floating	Tin	4-20	Right Angle
	Floating	Tin	4-20	Vertical
	Floating—Bottom Entry	Tin	6-15	Right Angle
	Floating	Tin	6-15	Right Angle
	Single Row—Bottom Entry	Tin	5-15	Vertical
	Single Row	Tin	5-15	Vertical
	Single Row	Tin	5-10	Vertical
	Single Row	Tin	5-15	Right Angle
	Single Row	Tin	3-20	Right Angle
	Single Row	Tin	3-20	Vertical
	Single Row	Tin	3-20	Right Angle

1.25mm (.049") Pitch Board-to-Board Receptacle

52565
Radial Taping

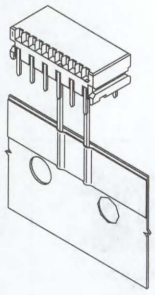

FEATURES AND SPECIFICATIONS

Features and Benefits
- Radial taping enables high volume automatic placement of through-hole components
- Sizes 7 to 14 circuits

Reference Information
Packaging: Radial tape
Mates With: 53339
Designed In: Millimeters

Electrical
Voltage: 125V
Current: 1.5A
Contact Resistance: 30mΩ max.
Dielectric Withstanding Voltage: 500V AC/1 min.
Insulation Resistance: 1000 MΩ min.

Physical
Housing: Glass-filled PBTP, UL 94V-0
Contact: Phosphor Bronze
Plating: Tin
Operating Temperature: -40 to +105°C

CATALOG DRAWING (FOR REFERENCE ONLY)

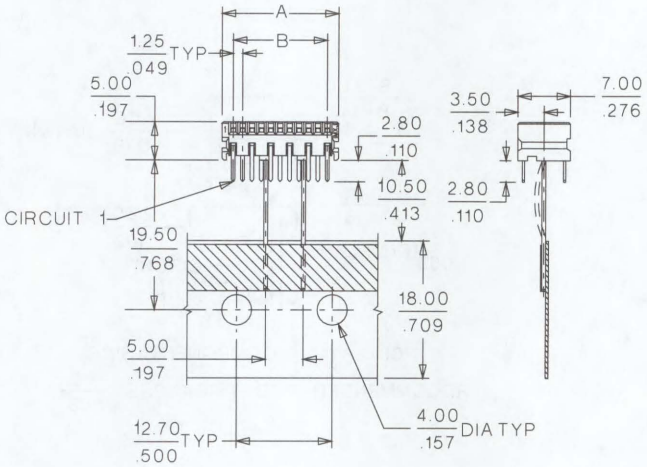

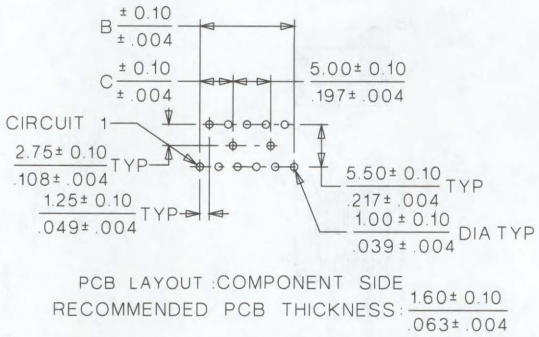

ORDERING INFORMATION AND DIMENSIONS

Circuits	Order No.	Dimension		
		A	B	C
7	52565-0790	10.50 (.413)	7.50 (.295)	1.875 (.073)
8	52565-0890	11.75 (.462)	8.75 (.344)	
9	52565-0990	13.00 (.511)	10.00 (.393)	
10	52565-1090	14.25 (.561)	11.25 (.442)	
11	52565-1190	15.50 (.610)	12.50 (.492)	4.375 (.172)
12	52565-1290	16.75 (.659)	13.75 (.541)	
13	52565-1390	18.00 (.708)	15.00 (.590)	
14	52565-1490	19.25 (.757)	16.25 (.639)	

1.25mm (.049") Pitch Board-to-Board Header

53339

Radial Taping

FEATURES AND SPECIFICATIONS

Features and Benefits

- Radial taping enables high volume automatic placement of through hole components
- Sizes 7 to 14 circuits

Reference Information

Packaging: Radial tape
Mates With: 52565
Designed In: Millimeters

Electrical

Voltage: 125V
Current: 1.5A
Contact Resistance: 30mΩ max.
Dielectric Withstanding Voltage: 500V AC/1 min.
Insulation Resistance: 1000 MΩ min.

Physical

Housing: Glass-filled 6/6 nylon, UL 94V-0
Contact: Brass
Plating: Tin
Operating Temperature: -40 to +105°C

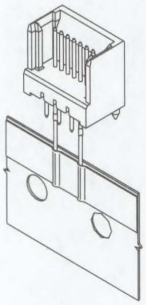

Mating Dimensions
53339 • 52565
H=7.8mm W=11.0mm

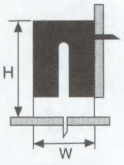

CATALOG DRAWING (FOR REFERENCE ONLY)

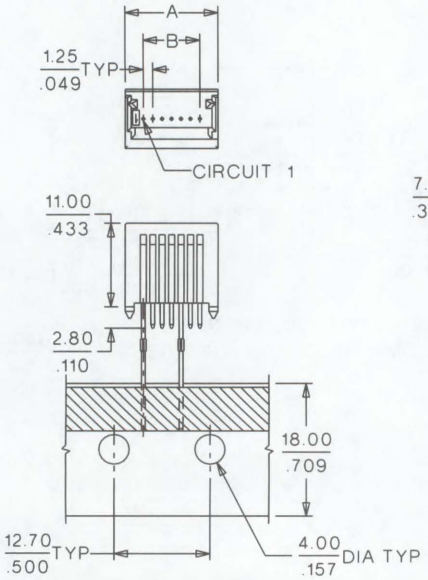

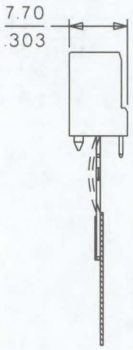

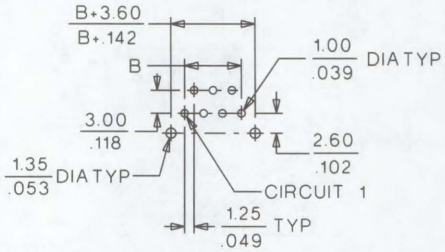

PCB LAYOUT :COMPONENT SIDE
RECOMMENDED PCB THICKNESS: 1.60 / .063

ORDERING INFORMATION AND DIMENSIONS

Circuits	Order No.	Dimension	
		A	B
7	53339-0790	12.30 (.484)	7.50 (.295)
8	53339-0890	13.55 (.533)	8.75 (.344)
9	53339-0990	14.80 (.582)	10.00 (.393)
10	53339-1090	16.05 (.631)	11.25 (.442)
11	53339-1190	17.30 (.681)	12.50 (.492)
12	53339-1290	18.55 (.730)	13.75 (.541)
13	53339-1390	19.80 (.779)	15.00 (.590)
14	53339-1490	21.05 (.828)	16.25 (.639)

1.27mm (.050") Pitch D-50L Introduction

Molex's D-50L leaf-type connectors offer mating protection and reliability for multiple cycles. D-50L connectors are available in a variety of styles in 20 to 100 circuits.

The D-50L series includes a plug and receptacle in both straight and right-angle forms. This provides for a full range of board-to-board configurations.

The Molex D-50L system utilizes a leaf-style contact design that offers low insertion force and high mating reliability.

The leaf-style plug design and bellows-style receptacle ensure contact forces are maintained in high pin-count applications. The leaf-style design also holds the male terminals firmly in place and protects them from being bent or misaligned during mating.

The housing design of the receptacle facilitates mating with molded slots that allow the plug to be twisted in and out. The D-style shroud on the plug assures visual orientation as well as physical polarization.

CATALOG DRAWING (FOR REFERENCE ONLY)

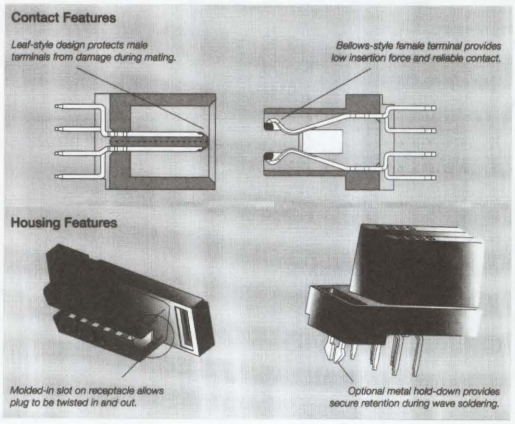

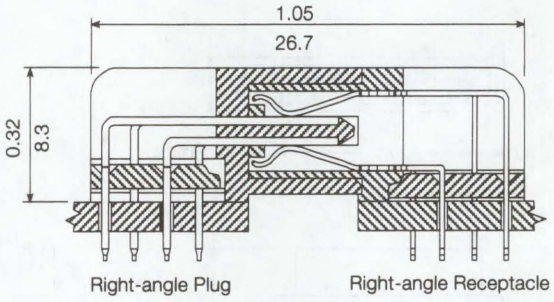

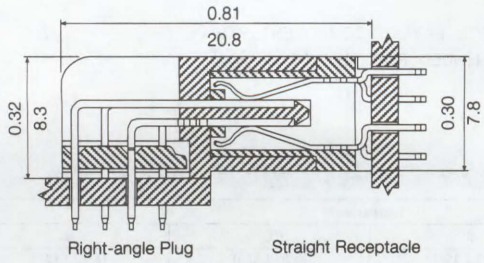

Right Angle

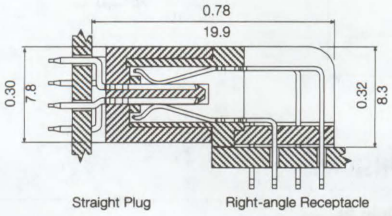

Right Angle

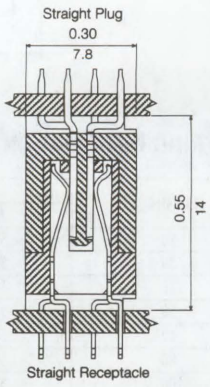

Stacking

1.27mm (.050") Pitch D-50L Receptacle

52326/52368 Dual Row Vertical

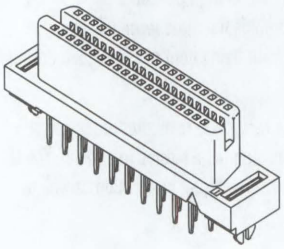

FEATURES AND SPECIFICATIONS

Features and Benefits

- Sizes 20 to 100 circuits
- Bellows-style terminal provides low insertion force and reliable contact
- Molded-in slot allows plug to be twisted in and out
- Optional metal peg provides secure retention during wave soldering

Reference Information

Packaging: Tray
Mates With: 52411, 52340, 52327 and 52412 (does not mate with EBBI 50-D)
Designed In: Millimeters

Electrical

Voltage: 125V
Current: 0.5A
Contact Resistance: 20mΩ max.
Dielectric Withstanding Voltage: 500V AC/1 min.
Insulation Resistance: 1000 MΩ min.

Physical

Housing: Glass-filled polyester, UL 94V-0
Contact: Phosphor Bronze
Plating: Selective Gold flash over Nickel
Metal Peg: Phosphor Bronze
Operating Temperature: -55 to +85°C

CATALOG DRAWING (FOR REFERENCE ONLY)

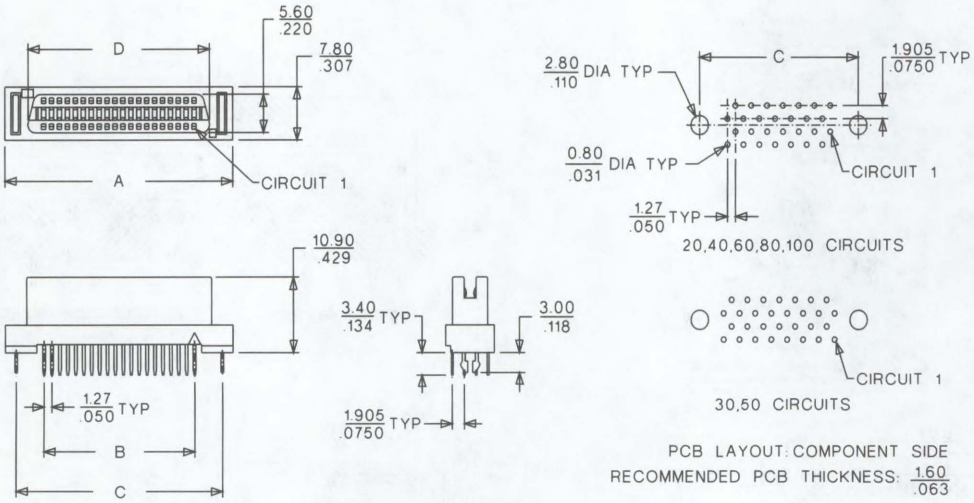

ORDERING INFORMATION AND DIMENSIONS

Circuits	Order No.		Dimension			
	Metal Peg	Without Metal Peg	A	B	C	D
20	52326-0201	52368-0201	23.75 (.935)	11.43 (.450)	20.32 (.800)	16.40 (.646)
30	52326-0301	52368-0301	30.10 (1.185)	17.78 (.700)	26.67 (1.050)	22.75 (.896)
40	52326-0401	52368-0401	36.45 (1.435)	24.13 (.950)	33.02 (1.300)	29.10 (1.146)
50	52326-0501	52368-0501	42.80 (1.685)	30.48 (1.200)	39.37 (1.550)	35.45 (1.396)
60	52326-0601	52368-0601	49.15 (1.935)	36.83 (1.450)	45.72 (1.800)	41.80 (1.646)
80	52326-0801	52368-0801	61.85 (2.435)	49.53 (1.950)	58.42 (2.300)	54.50 (2.146)
100	52326-1001	52368-1001	74.55 (2.935)	62.23 (2.450)	71.12 (2.800)	67.20 (2.646)

1.27mm (.050") Pitch D-50L Receptacle

52409/52410 Dual Row Right Angle

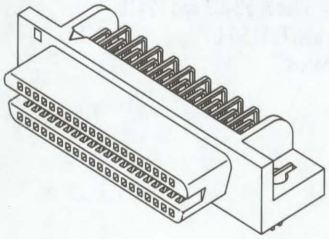

FEATURES AND SPECIFICATIONS

Features and Benefits

- Sizes 20 to 100 circuits
- Bellows-style terminal provides low insertion force and reliable contact
- Molded-in slot allows plug to be twisted in and out
- Optional metal peg provides secure retention during wave soldering

Reference Information

Packaging: Tray
Mates With: 52411, 52340, 52327 and 52412 (does not mate with EBBI 50-D)
Designed In: Millimeters

Electrical

Voltage: 125V
Current: 0.5A
Contact Resistance: 20mΩ max.
Dielectric Withstanding Voltage: 500V AC/1 min.
Insulation Resistance: 1000 MΩ min.

Physical

Housing: Glass-filled polyester, UL 94V-0
Contact: Phosphor Bronze
Plating: Selective Gold flash over Nickel
Metal Peg: Phosphor Bronze
Operating Temperature: -55 to +85°C

CATALOG DRAWING (FOR REFERENCE ONLY)

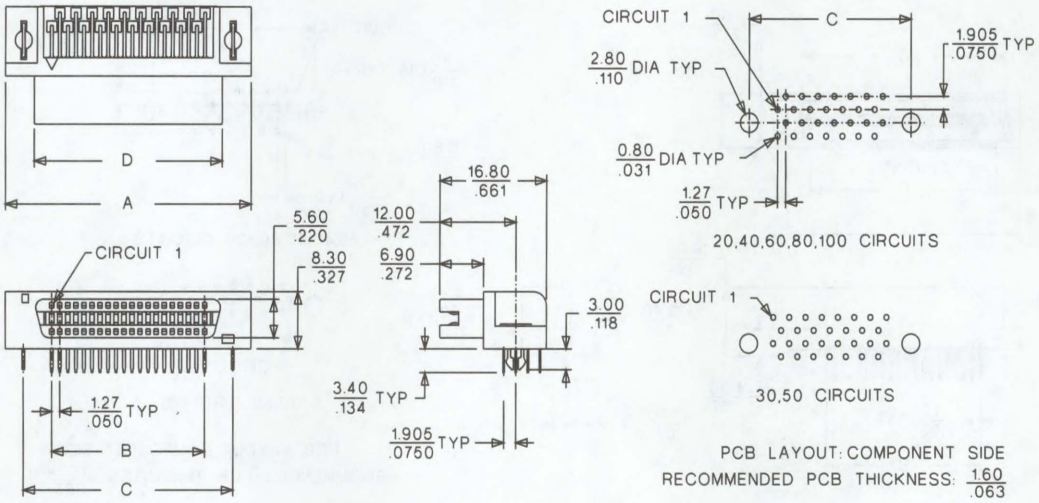

ORDERING INFORMATION AND DIMENSIONS

Circuits	Order No.		Dimension			
	Metal Peg	Without Metal Peg	A	B	C	D
20	52409-0201	52410-0201	26.00 (1.024)	11.43 (.450)	20.32 (.800)	16.40 (.646)
30	52409-0301	52410-0301	32.35 (1.274)	17.78 (.700)	26.67 (1.050)	22.75 (.896)
40	52409-0401	52410-0401	38.70 (1.524)	24.13 (.950)	33.02 (1.300)	29.10 (1.146)
50	52409-0501	52410-0501	45.05 (1.774)	30.48 (1.200)	39.37 (1.550)	35.45 (1.396)
60	52409-0601	52410-0601	51.40 (2.024)	36.83 (1.450)	45.72 (1.800)	41.80 (1.646)
80	52409-0801	52410-0801	64.10 (2.524)	49.53 (1.950)	58.42 (2.300)	54.50 (2.146)
100	52409-1001	52410-1001	76.80 (3.024)	62.23 (2.450)	71.12 (2.800)	67.20 (2.646)

1.27mm (.050") Pitch D-50L Header

52411/52340 Dual Row Vertical

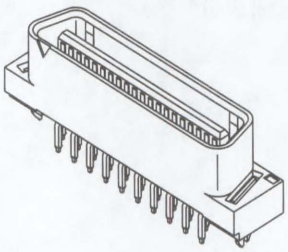

FEATURES AND SPECIFICATIONS

Features and Benefits

- Sizes 20 to 100 circuits
- Leaf-style design protects terminals from damage during mating
- D-style shroud provides visual orientation and physical polarization
- Optional metal peg provides secure retention during wave soldering

Reference Information

Packaging: Tray
Mates With: 52326, 52368, 52409 and 52410 (does not mate with EBBI 50-D)
Designed In: Millimeters

Electrical

Voltage: 125V
Current: 0.5A
Contact Resistance: 20mΩ max.
Dielectric Withstanding Voltage: 500V AC/1 min.
Insulation Resistance: 1000 MΩ min.

Physical

Housing: Glass-filled polyester, UL 94V-0
Contact: Brass
Plating: Selective Gold flash over Nickel
Metal Peg: Phosphor Bronze
Operating Temperature: -55 to +85°C

CATALOG DRAWING (FOR REFERENCE ONLY)

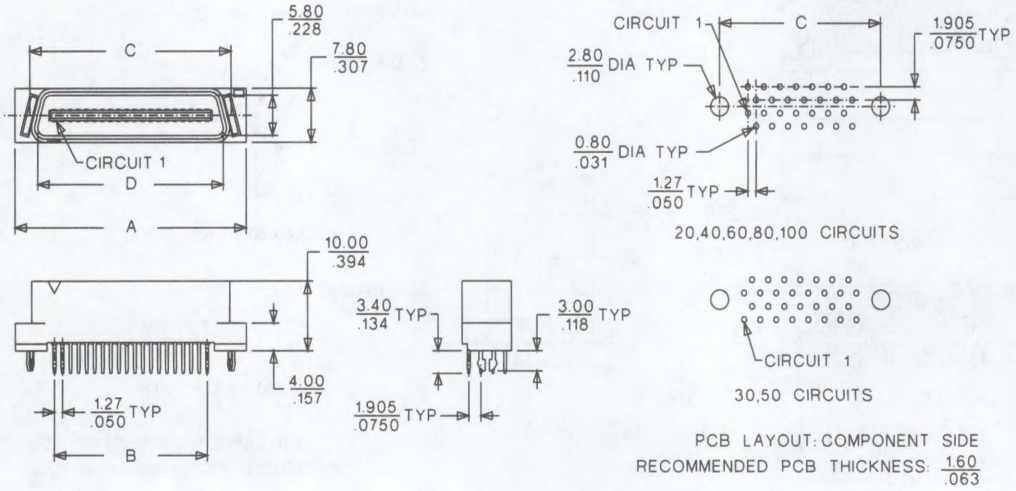

ORDERING INFORMATION AND DIMENSIONS

Circuits	Order No.		Dimension			
	Metal Peg	Without Metal Peg	A	B	C	D
20	52411-0201	52340-0201	23.75 (.935)	11.43 (.450)	19.05 (.750)	16.56 (.652)
30	52411-0301	52340-0301	30.10 (1.185)	17.78 (.700)	25.40 (1.000)	22.91 (.902)
40	52411-0401	52340-0401	36.45 (1.435)	24.13 (.950)	31.75 (1.250)	29.26 (1.152)
50	52411-0501	52340-0501	42.80 (1.685)	30.48 (1.200)	38.10 (1.500)	35.61 (1.402)
60	52411-0601	52340-0601	49.15 (1.935)	36.83 (1.450)	44.45 (1.750)	41.96 (1.652)
80	52411-0801	52340-0801	61.85 (2.435)	49.53 (1.950)	57.15 (2.250)	54.66 (2.152)
100	52411-1001	52340-1001	74.55 (2.935)	62.23 (2.450)	69.85 (2.750)	67.36 (2.652)

1.27mm (.050") Pitch D-50L Header

52327/52412 Dual Row Right Angle

FEATURES AND SPECIFICATIONS

Features and Benefits

- Sizes 20 to 100 circuits
- Leaf-style design protects terminals from damage during mating
- D-style shroud provides visual orientation and physical polarization
- Optional metal peg provides secure retention during wave soldering

Reference Information

Packaging: Tray
Mates With: 52326, 52368, 52409 and 52410 (does not mate with EBBI 50-D)
Designed In: Millimeters

Electrical

Voltage: 125V
Current: 0.5A
Contact Resistance: 20mΩ max.
Dielectric Withstanding Voltage: 500V AC/1 min.
Insulation Resistance: 1000 MΩ min.

Physical

Housing: Glass-filled polyester, UL 94V-0
Contact: Brass
Plating: Selective Gold flash over Nickel
Metal Peg: Phosphor Bronze
Operating Temperature: -55 to +85°C

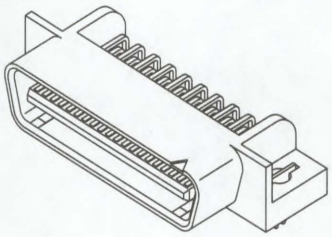

CATALOG DRAWING (FOR REFERENCE ONLY)

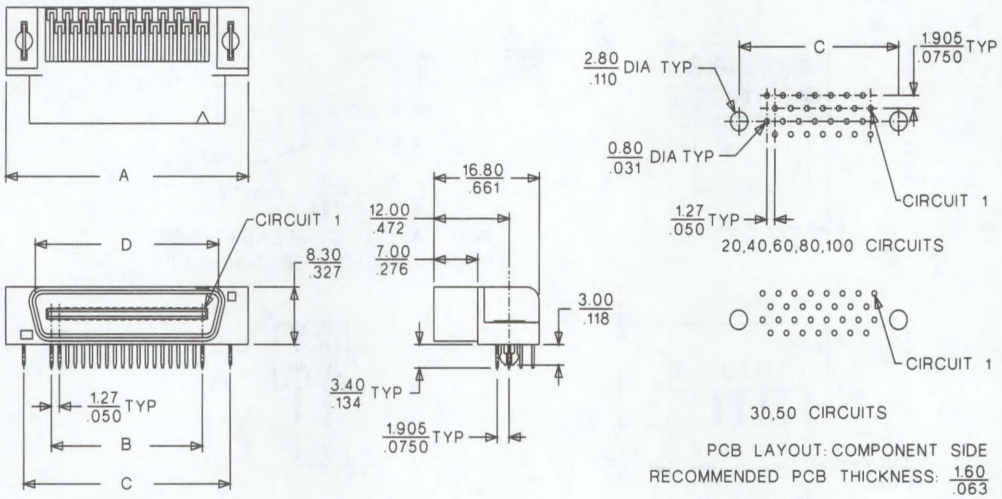

ORDERING INFORMATION AND DIMENSIONS

Circuits	Order No.		Dimension			
	Metal Peg	Without Metal Peg	A	B	C	D
20	52327-0201	52412-0201	26.00 (1.024)	11.43 (.450)	20.32 (.800)	16.56 (.652)
30	52327-0301	52412-0301	32.35 (1.274)	17.78 (.700)	26.67 (1.050)	22.91 (.902)
40	52327-0401	52412-0401	38.70 (1.524)	24.13 (.950)	33.02 (1.300)	29.26 (1.152)
50	52327-0501	52412-0501	45.05 (1.774)	30.48 (1.200)	39.37 (1.550)	35.61 (1.402)
60	52327-0601	52412-0601	51.40 (2.024)	36.83 (1.450)	45.72 (1.800)	41.96 (1.652)
80	52327-0801	52412-0801	64.10 (2.524)	49.53 (1.950)	58.42 (2.300)	54.66 (2.152)
100	52327-1001	52412-1001	76.80 (3.024)	62.23 (2.450)	71.12 (2.800)	67.36 (2.652)

1.50mm (.059") Pitch Board-to-Board Receptacle

52022

Dual Row Vertical

FEATURES AND SPECIFICATIONS

Features and Benefits

- Sizes 6 to 30 circuits
- High pressure tuning fork terminal

Reference Information

Packaging: Tray
Mates With: 53020
Designed In: Millimeters

Electrical

Voltage: 125V
Current: 1.0A
Contact Resistance: 20mΩ max.
Dielectric Withstanding Voltage: 500V AC/1 min.
Insulation Resistance: 1000 MΩ min.

Physical

Housing: 6/6 nylon, UL 94V-0
Contact: Phosphor Bronze
Plating: Tin
Operating Temperature: -40 to +105°C

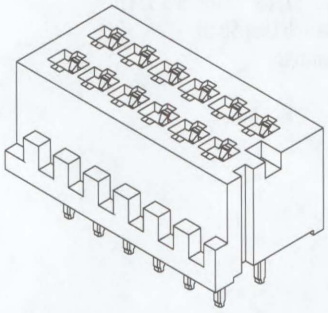

CATALOG DRAWING (FOR REFERENCE ONLY)

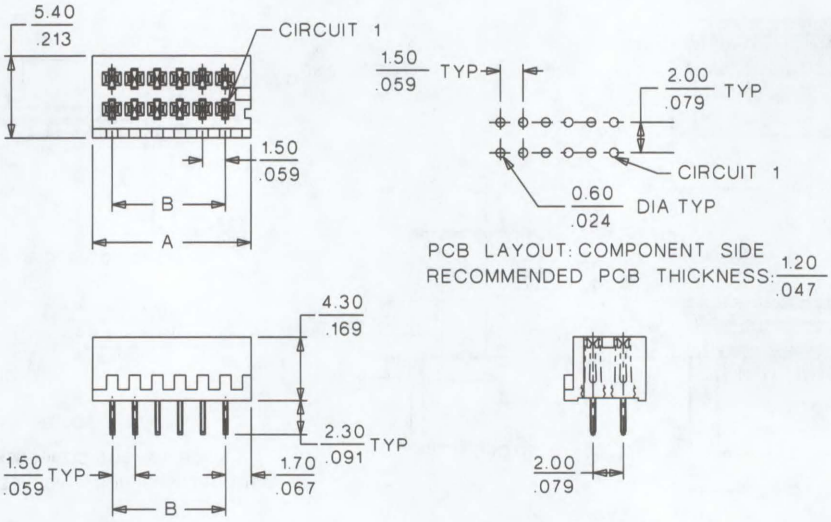

ORDERING INFORMATION AND DIMENSIONS

Circuits	Order No.	Dimension	
		A	B
6	52022-0610	6.00 (.236)	3.00 (.118)
8	52022-0810	7.50 (.295)	4.50 (.177)
10	52022-1010	9.00 (.354)	6.00 (.236)
12	52022-1210	10.50 (.413)	7.50 (.295)
14	52022-1410	12.00 (.472)	9.00 (.354)
16	52022-1610	13.50 (.531)	10.50 (.413)
18	52022-1810	15.00 (.591)	12.00 (.472)
20	52022-2010	16.50 (.650)	13.50 (.531)
22	52022-2210	18.00 (.709)	15.00 (.590)
24	52022-2410	19.50 (.768)	16.50 (.649)
26	52022-2610	21.00 (.827)	18.00 (.708)
28	52022-2810	22.50 (.886)	19.50 (.767)
30	52022-3010	24.00 (.945)	21.00 (.826)

1.50mm (.059") Pitch Board-to-Board Header

53020

Dual Row Right Angle

FEATURES AND SPECIFICATIONS

Features and Benefits
- Sizes 6 to 30 circuits

Reference Information
Packaging: Tray
Mates With: 52022
Designed In: Millimeters

Electrical
Voltage: 125V
Current: 1.0A
Contact Resistance: 20mΩ max.
Dielectric Withstanding Voltage: 500V AC/1 min.
Insulation Resistance: 1000 MΩ min.

Physical
Housing: 6/6 nylon, UL 94V-0
Contact: Phosphor Bronze
Plating: Tin
Operating Temperature: -40 to +105°C

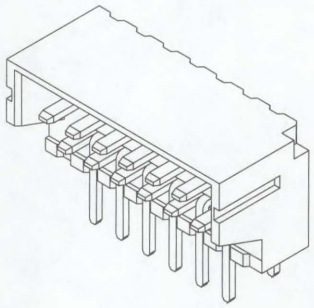

Mating Dimensions
53020 • 52022
H=5.5mm W=7.3mm

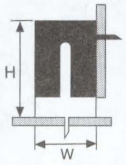

CATALOG DRAWING (FOR REFERENCE ONLY)

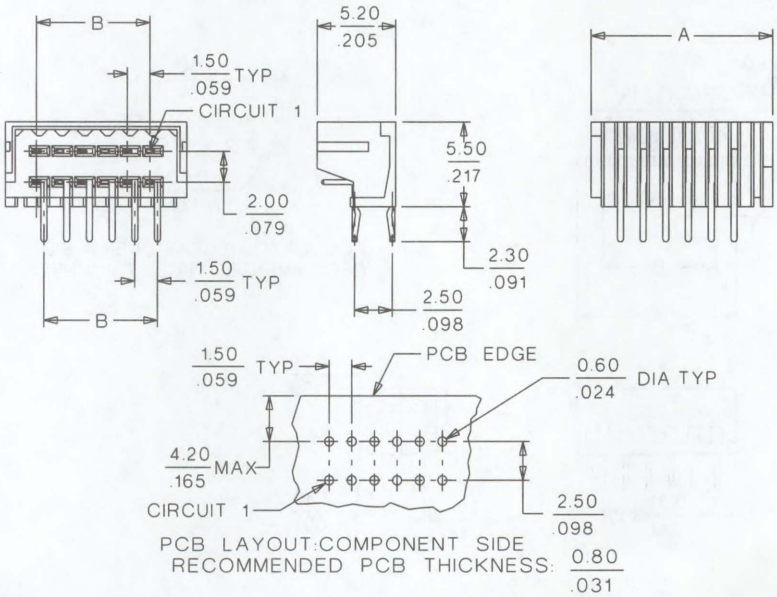

ORDERING INFORMATION AND DIMENSIONS

Circuits	Order No.	Dimension	
		A	B
6	53020-0610	7.50 (.295)	3.00 (.118)
8	53020-0810	9.00 (.354)	4.50 (.177)
10	53020-1010	10.50 (.413)	6.00 (.236)
12	53020-1210	12.00 (.472)	7.50 (.295)
14	53020-1410	13.50 (.531)	9.00 (.354)
16	53020-1610	15.00 (.591)	10.50 (.413)
18	53020-1810	16.50 (.650)	12.00 (.472)
20	53020-2010	18.00 (.709)	13.50 (.531)
22	53020-2210	19.50 (.768)	15.00 (.590)
24	53020-2410	21.00 (.827)	16.50 (.649)
26	53020-2610	22.50 (.886)	18.00 (.708)
28	53020-2810	24.00 (.945)	19.50 (.767)
30	53020-3010	25.50 (1.004)	21.00 (.826)

1.50mm (.059") Pitch Board-to-Board Receptacle

52024

Vertical

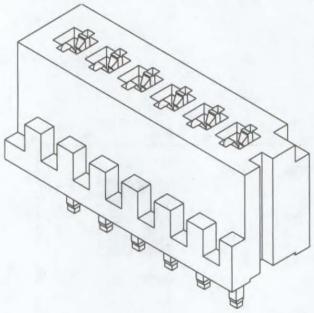

FEATURES AND SPECIFICATIONS

Features and Benefits

- Sizes 4 to 15 circuits

Reference Information

Packaging: Tray
Mates With: 53022
Designed In: Millimeters

Electrical

Voltage: 125V
Current: 1.0A
Contact Resistance: 20mΩ max.
Dielectric Withstanding Voltage: 500V AC/1 min.
Insulation Resistance: 1000 MΩ min.

Physical

Housing: 6/6 nylon, UL 94V-0
Contact: Phosphor Bronze
Plating: Tin
Operating Temperature: -40 to +105°C

CATALOG DRAWING (FOR REFERENCE ONLY)

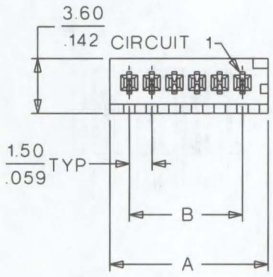

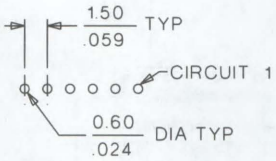

PCB LAYOUT: COMPONENT SIDE
RECOMMENDED PCB THICKNESS: 0.80 / .031

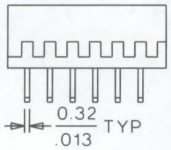

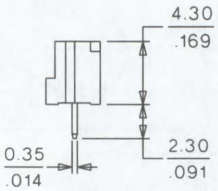

ORDERING INFORMATION AND DIMENSIONS

Circuits	Order No.	Dimension	
		A	B
4	52024-0410	7.50 (.295)	4.50 (.177)
5	52024-0510	9.00 (.354)	6.00 (.236)
6	52024-0610	10.50 (.413)	7.50 (.295)
7	52024-0710	12.00 (.472)	9.00 (.354)
8	52024-0810	13.50 (.531)	10.50 (.413)
9	52024-0910	15.00 (.591)	12.00 (.472)
10	52024-1010	16.50 (.650)	13.50 (.531)
11	52024-1110	18.00 (.709)	15.00 (.590)
12	52024-1210	19.50 (.768)	16.50 (.649)
13	52024-1310	21.00 (.827)	18.00 (.708)
14	52024-1410	22.50 (.886)	19.50 (.767)
15	52024-1510	24.00 (.945)	21.00 (.826)

1.50mm (.059") Pitch Board-to-Board Header

53022 Vertical

FEATURES AND SPECIFICATIONS

Features and Benefits

- Sizes 4 to 15 circuits

Reference Information

Packaging: Tray
Mates With: 52024
Designed In: Millimeters

Electrical

Voltage: 125V
Current: 1.0A
Contact Resistance: 20mΩ max.
Dielectric Withstanding Voltage: 500V AC/1 min.
Insulation Resistance: 1000 MΩ min.

Physical

Housing: 6/6 nylon, UL 94V-0
Contact: Phosphor Bronze
Plating: Tin
Operating Temperature: -40 to +105°C

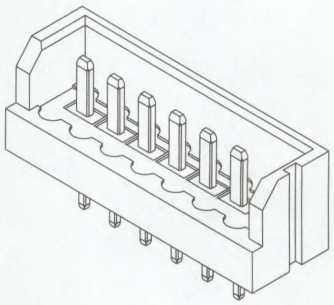

Mating Dimensions
53022 • 52024
H=6.0mm

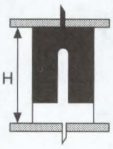

CATALOG DRAWING (FOR REFERENCE ONLY)

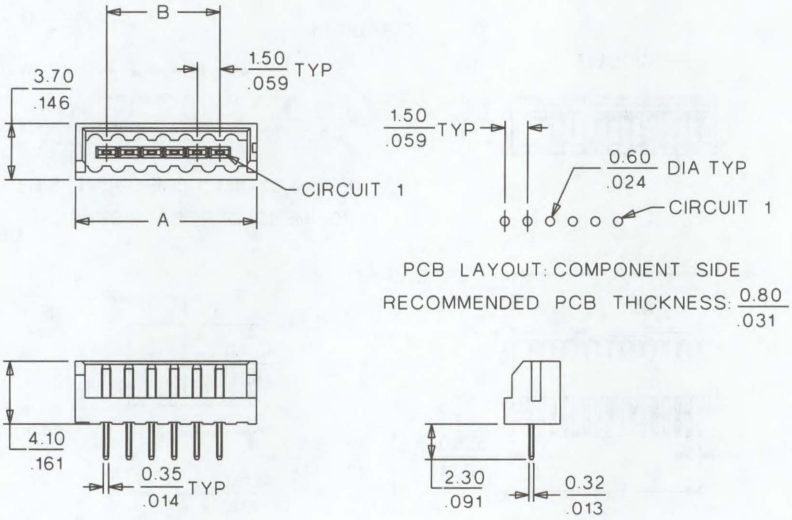

ORDERING INFORMATION AND DIMENSIONS

Circuits	Order No.	Dimension	
		A	B
4	53022-0410	9.00 (.354)	4.50 (.177)
5	53022-0510	10.50 (.413)	6.00 (.236)
6	53022-0610	12.00 (.472)	7.50 (.295)
7	53022-0710	13.50 (.531)	9.00 (.354)
8	53022-0810	15.00 (.591)	10.50 (.413)
9	53022-0910	16.50 (.650)	12.00 (.472)
10	53022-1010	18.00 (.709)	13.50 (.531)
11	53022-1110	19.50 (.768)	15.00 (.590)
12	53022-1210	21.00 (.827)	16.50 (.649)
13	53022-1310	22.50 (.886)	18.00 (.708)
14	53022-1410	24.00 (.945)	19.50 (.767)
15	53022-1510	25.50 (1.004)	21.00 (.826)

1.50mm (.059") Pitch Board-to-Board Receptacle

52906

Vertical

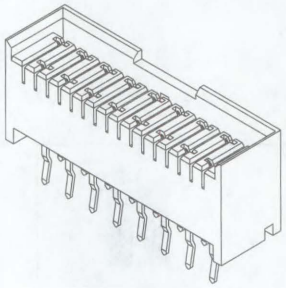

FEATURES AND SPECIFICATIONS

Features and Benefits

- Bridge-style mating ability allows movement of daughterboard
- Size 16 circuits

Reference Information

Packaging: Tray
Mates With: 53652
Designed In: Millimeters

Electrical

Voltage: 50V
Current: 1.0A
Contact Resistance: 80mΩ max.
Dielectric Withstanding Voltage: 500V AC
Insulation Resistance: 500 MΩ min.

Physical

Housing: PBTP, UL 94V-0
Contact: Phosphor Bronze
Plating: Tin/Lead
Operating Temperature: -40 to +85°C

CATALOG DRAWING (FOR REFERENCE ONLY)

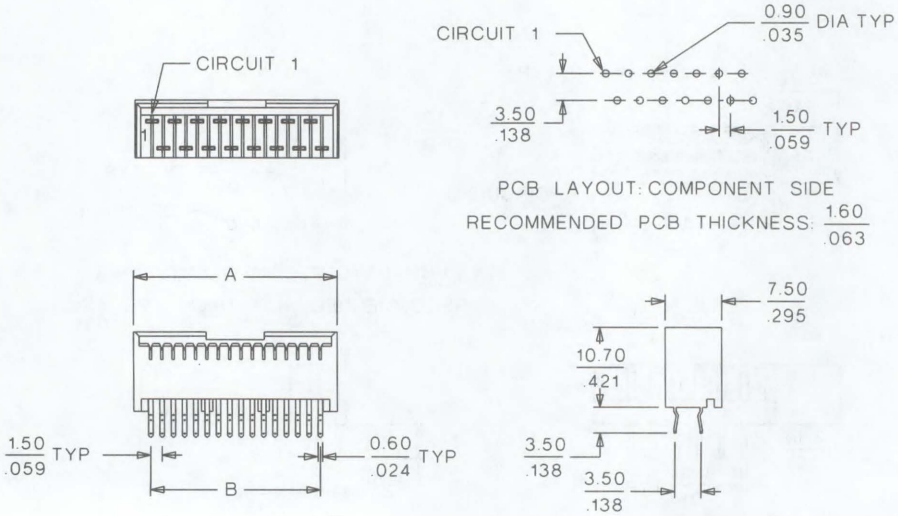

ORDERING INFORMATION AND DIMENSIONS

Circuits	Order No.	Dimension	
		A	B
16	52906-1611	27.00 (1.060)	22.50 (.880)

1.50mm (.059") Pitch Board-to-Board Header

53652 Flexible

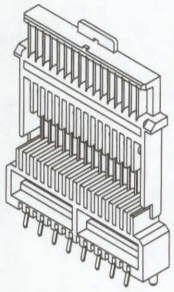

FEATURES AND SPECIFICATIONS

Features and Benefits

- Flexible bridge-style mating ability allows movement of daughterboard
- Sizes 16 circuits

Reference Information

Packaging: Tray
Mates With: 52906
Designed In: Millimeters

Electrical

Voltage: 50V
Current: 1.0A
Contact Resistance: 80mΩ max.
Dielectric Withstanding Voltage: 500V AC
Insulation Resistance: 500 MΩ min.

Physical

Housing: PBTP, UL 94V-0
Contact: Phosphor Bronze
Plating: Pre-Tin
Operating Temperature: -40 to +85°C

CATALOG DRAWING (FOR REFERENCE ONLY)

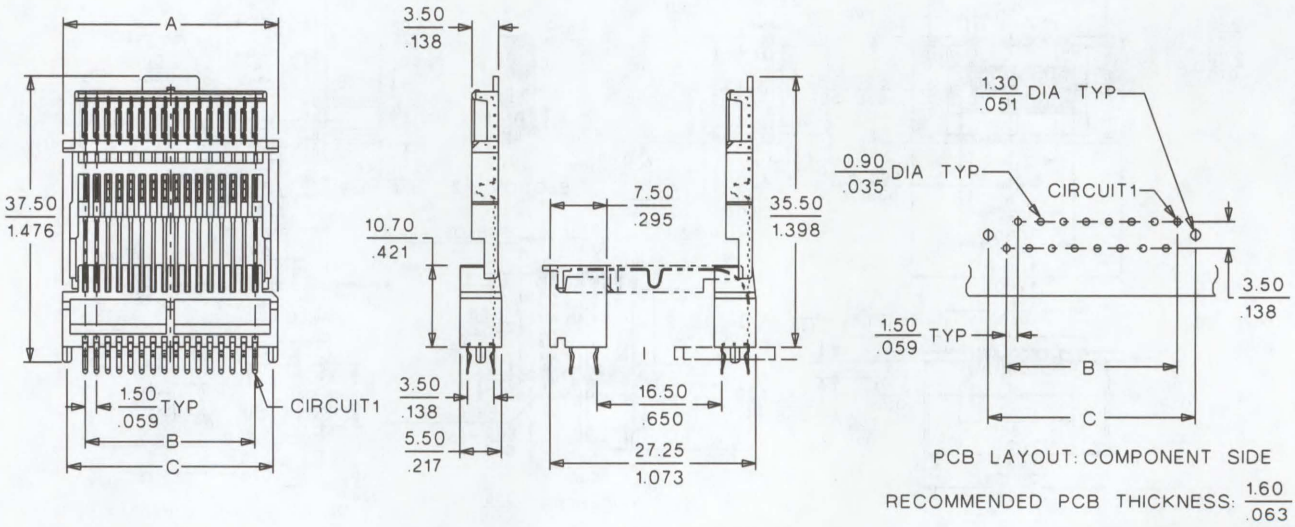

ORDERING INFORMATION AND DIMENSIONS

Circuits	Order No.	Dimension		
		A	B	C
16	53652-1611	28.50 (1.120)	22.50 (.880)	27.30 (1.075)

1.00mm (.039") Pitch Board-to-Board Receptacle

54462

Panel Detachable Type

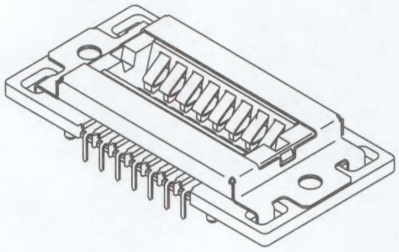

FEATURES AND SPECIFICATIONS

Features and Benefits

- For use with FPC to allow flexible movement
- Solder tails pierce through FPC, and are bent flat for secure FPC attachment and easy soldering
- 20,000 mating cycles for high durability
- Threaded screw holes for additional FPC attachment
- Black-plated metal PCB pegs provide anti-static protection
- Floating tolerance facilitates blind mating

Reference Information

Product Specification: Contact Molex
Packaging: Tray
Mates With: 55323
Designed In: Millimeters

Electrical

Voltage: 12V
Current: 1.0A
Contact Resistance: 60mΩ max.
Dielectric Withstanding Voltage: 500V AC/1 min.
Insulation Resistance: 500 MΩ min.

Physical

Housing: Black PBT, UL 94HB
Contact: Phosphor Bronze
Plating: Contact Area—Gold
Solder Tail Area—Tin
Metal Shell: Phosphor Bronze, Black Nickel plating
Operating Temperature: -40 to +105°C

CATALOG DRAWING (FOR REFERENCE ONLY)

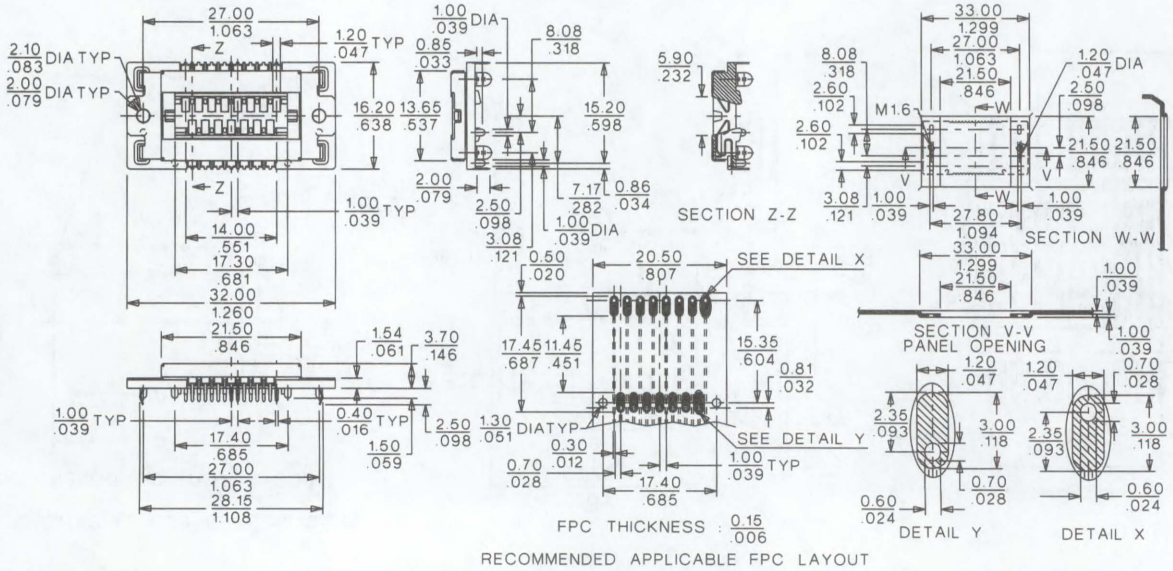

ORDERING INFORMATION

Circuits	Order No.
15	54462-1511

1.00mm (.039") Pitch Board-to-Board Header

55323

SMT, Panel Detachable Type

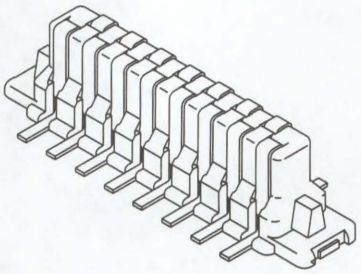

FEATURES AND SPECIFICATIONS

Features and Benefits

- 20,000 mating cycles for high durability
- Protected contacts prevent damage during mating
- End buttress eliminates floating tolerance after mating
- Visible SMT tails provide easy solder checking
- Gold-plating for reliable contact interface

Reference Information

Product Specification: Contact Molex
Packaging: Tray
Mates With: 54462
Designed In: Millimeters

Electrical

Voltage: 12V
Current: 1.0A
Contact Resistance: 60mΩ max.
Dielectric Withstanding Voltage: 500V AC/1 min.
Insulation Resistance: 500 MΩ min.

Physical

Housing: Black PBT, UL 94HB
Contact: Phosphor Bronze
Plating: Contact Area—Gold
Solder Tail Area—Tin
Operating Temperature: -40 to +105°C

CATALOG DRAWING (FOR REFERENCE ONLY)

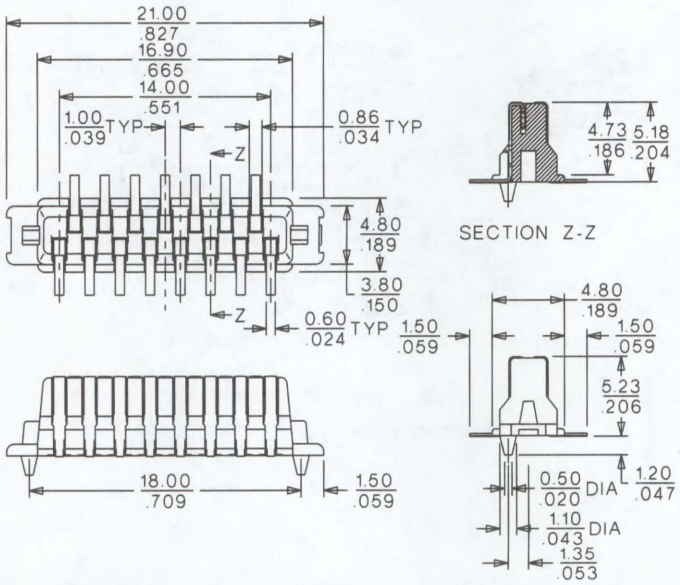

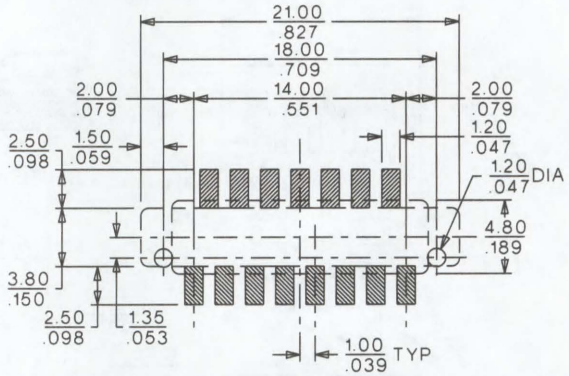

ORDERING INFORMATION

Circuits	Order No.
15	55323-1511

1.60mm (.063") Pitch Board-to-Board Receptacle

54092

Right Angle Panel Detachable

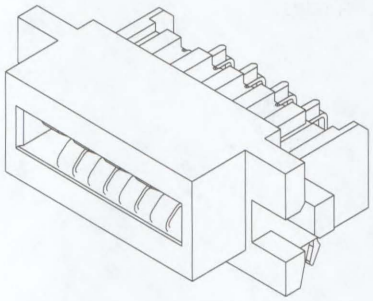

FEATURES AND SPECIFICATIONS

Features and Benefits

- Size 8 circuits
- Panel release for "anti-theft" function
- Pull tab on housing for easy mating/unmating
- Metal peg for PCB locking
- High mating cycle (20,000 times)

Reference Information

Packaging: Tray
Mates With: 53866-0890
Designed In: Millimeters

Electrical

Voltage: 125V
Current: 1.0A
Contact Resistance: 35mΩ max.
Dielectric Withstanding Voltage: 500V AC
Insulation Resistance: 50 MΩ min.

Mechanical

Durability: 20,000 cycles

Physical

Housing: PBT, UL 94V-0
Contact: Phosphor Bronze
Plating: Selective Gold
Operating Temperature: -40 to +105°C
Recommended PCB Thickness: 1.6mm ± 0.10

CATALOG DRAWING (FOR REFERENCE ONLY)

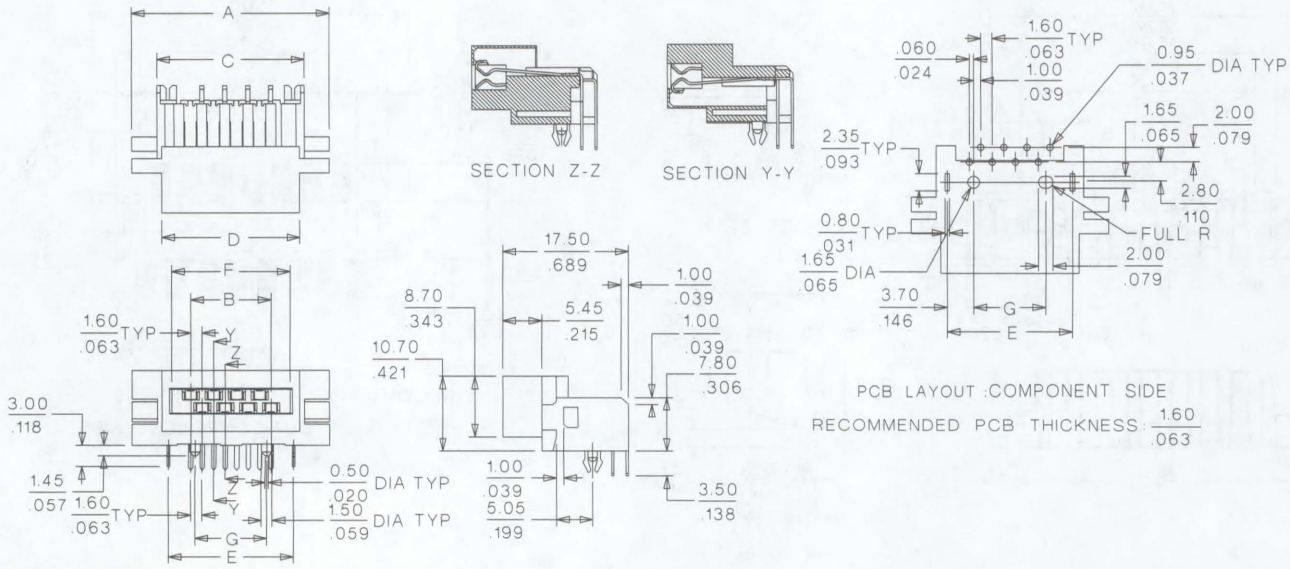

ORDERING INFORMATION AND DIMENSIONS

Circuits	Order No.	Dimension						
		A	B	C	D	E	F	G
8	54092-0811	27.50 (1.083)	11.20 (.441)	20.50 (.807)	19.20 (.756)	17.40 (.685)	16.50 (.650)	10.00 (.394)

1.60mm (.063") Pitch Board-to-Board Header

53866

SMT Panel Detachable

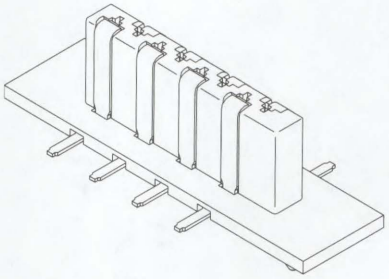

FEATURES AND SPECIFICATIONS

Features and Benefits

- Size 8 circuits
- Tapered PCB pegs
- Tape and reel packaging
- High mating cycle (20,000 times)

Reference Information

Packaging: Tape and reel
Mates With: 54092-0811
Designed In: Millimeters

Electrical

Voltage: 125V
Current: 1.0A
Contact Resistance: 35mΩ max.
Dielectric Withstanding Voltage: 500V AC
Insulation Resistance: 50 MΩ min.

Mechanical

Durability: 20,000 cycles

Physical

Housing: PPA, UL94V-0
Contact: Phosphor Bronze
Plating: Selective Gold
Operating Temperature: -40 to +105°C

CATALOG DRAWING (FOR REFERENCE ONLY)

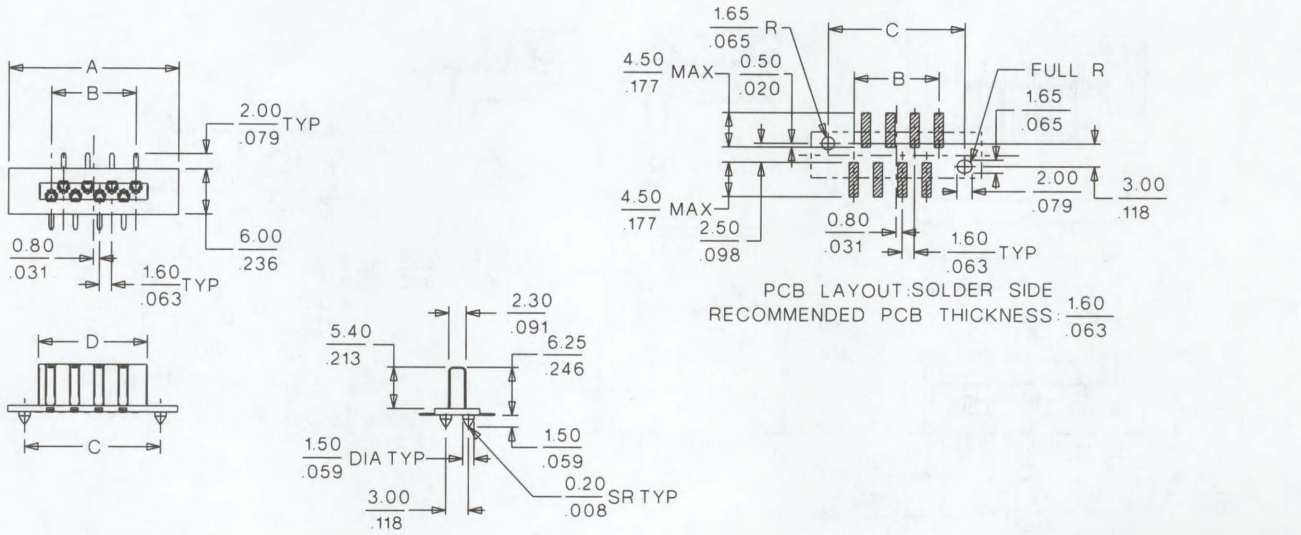

ORDERING INFORMATION AND DIMENSIONS

Circuits	Order No.	Dimension			
		A	B	C	D
8	53866-0890	22.50 (.886)	11.20 (.441)	18.00 (.709)	14.40 (.567)

1.60mm (.062") Pitch Board-to-Board Receptacle

52712

Right Angle Detachable

FEATURES AND SPECIFICATIONS

Features and Benefits

- Size 12 circuits
- Pull tab on housing for easy mating/unmating
- PCB locking pegs

Reference Information

Mates With: 53440 plug
Designed In: Millimeters

Electrical

Voltage: 125V
Current: 1.0A max.
Contact Resistance: 35mΩ max.
Dielectric Withstanding Voltage: 500V AC/1 min.
Insulation Resistance: 500 MΩ min.

Physical

Housing: PBT, UL 94V-0
Contact: Phosphor Bronze
Plating: Gold on contacts and Tin on solder tails
Operating Temperature: -40 to +105°C

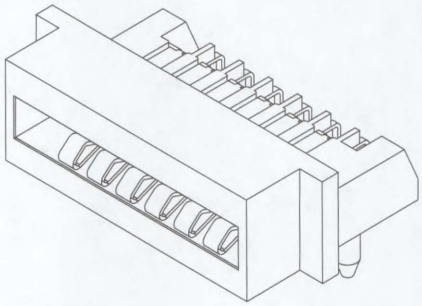

CATALOG DRAWING (FOR REFERENCE ONLY)

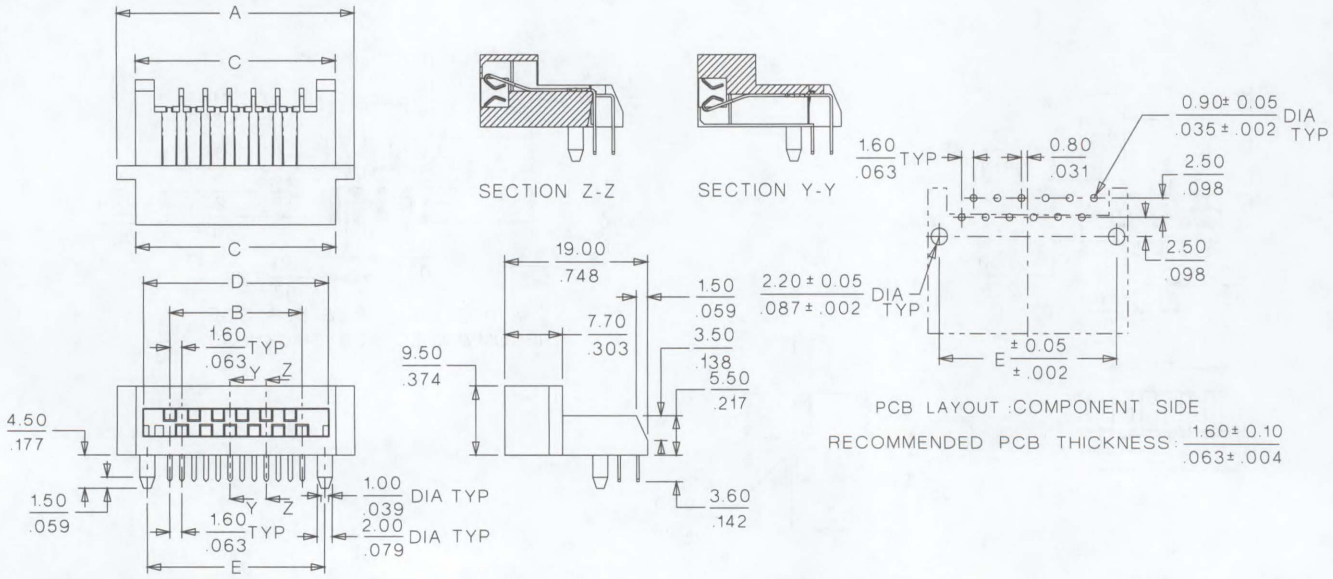

ORDERING INFORMATION AND DIMENSIONS

Circuits	Order No.	Dimension			
		A	B	C	D
12	52712-1211	26.60 (1.047)	17.60 (.693)	24.60 (.969)	23.60 (.929)

1.60mm (.062") Pitch Board-to-Board Plug

53440

SMT, Vertical Detachable

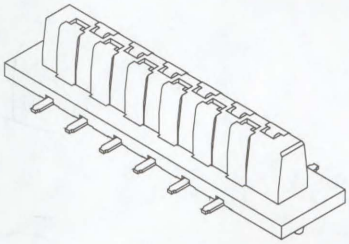

FEATURES AND SPECIFICATIONS

Features and Benefits
- Size 12 circuits
- Tapered PCB pegs

Reference Information
Packaging: Tube or embossed tape
Mates With: 52712 receptacle
Designed In: Millimeters

Electrical
Voltage: 125V
Current: 1.0A max.
Contact Resistance: 35mΩ max.
Dielectric Withstanding Voltage: 500V AC/1 min.
Insulation Resistance: 500 MΩ min.

Physical
Housing: PPA, UL 94V-0
Contact: Phosphor Bronze
Plating: Gold on contacts and Tin/Lead on solder tails
Operating Temperature: -40 to +105°C

CATALOG DRAWING (FOR REFERENCE ONLY)

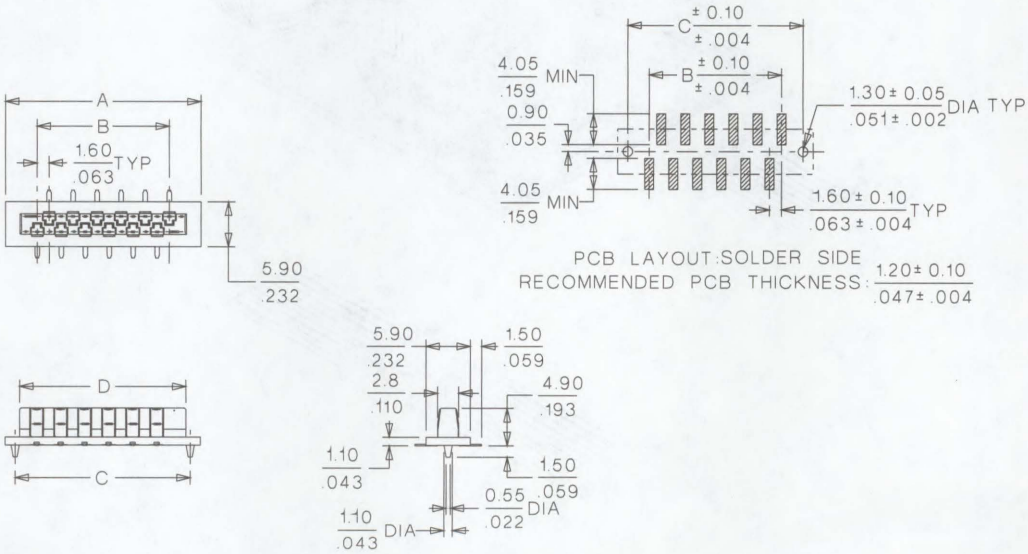

ORDERING INFORMATION AND DIMENSIONS

Circuits	Order No.	Dimension			
		A	B	C	D
12	53440-1211	26.00 (1.024)	17.60 (.693)	23.30 (.917)	22.15 (.872)

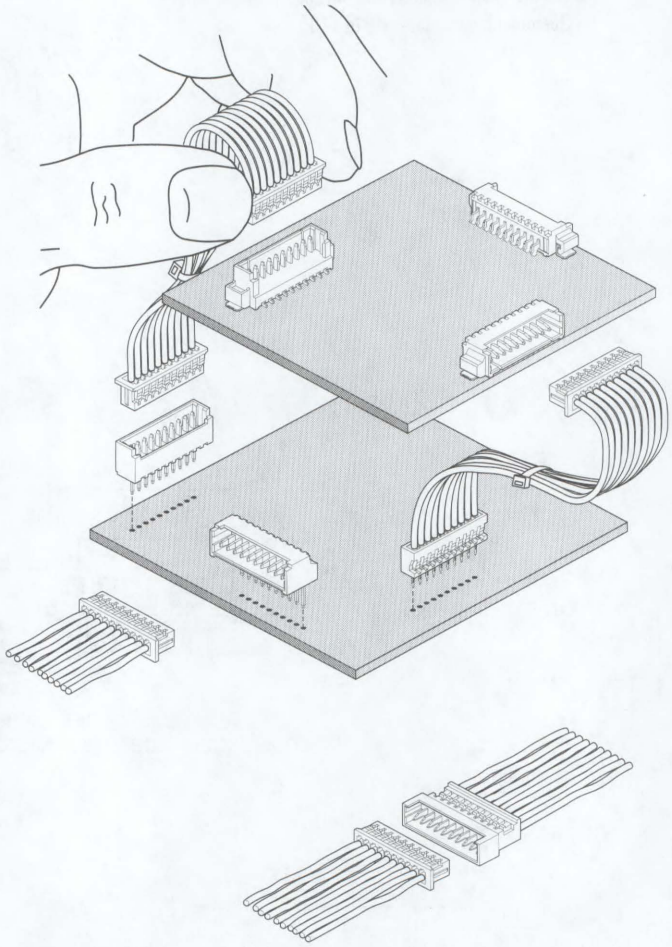

Pitch	Row	Name	Crimp Receptacle		TH SMT	Headers		
			Terminal	Housing		Vertical	Right Angle	Bottom Entry
1.25mm	Single	PanelMate™	50641/50753	51146	SMT		53779/53780	
	Dual		50516	51127	SMT	53505		
	Single		50079/50058	51021	SMT	53398	53261	
	Single				TH	53047	53048	
1.50mm	Single		87421	87439	SMT	87437	87438	
2.00mm	Single		50212	51065	TH	53253	53254	
	Single		50212	87369	TH	89400	89401	
	Single	Sherlock™	50212	35507	TH	35362	35363	
	Single		50011	51004	TH	53014	53015	53025

Wire-to-Wire Systems					
Pitch	Row	Plug		Receptacle	
		Terminal	Housing	Terminal	Housing
1.25mm	Single	50125/50133	51047	50079/50058	51021
2.00mm	Single	50012	51006	50013	51005

1.25mm (.049") Pitch PanelMate™

INTRODUCTION

Features and Benefits

- Ultra low-profile meets slimmer equipment needs
- Variable height options offer design flexibility
- Crimp and FPC options meet various termination requirements
- Shielded headers offer EMI/RFI protection
- Tape-and-reel packaging allows easy automated placement
- Solder conducing SMT tails ensure stable solder joints
- Spring box contact for protection and stable signal contact
- Friction lock withstands vibration and shock
- Housing lance offers superior terminal retention
- Gold-plated contacts for smooth wiping action

Applications

- LCD
- Notebook PC/PDA
- Mini PCI Module*
- Mobile Phones
- Camcorder
- Digital Camera
- Handy Terminal
- Medical Equipment
- Base Stations
- Any low-profile application

* Note: Certain PanelMate parts have been adopted as part of the Mini PCI module standard; contact Molex for more details

Molex's 1.25mm (.049") pitch PanelMate series is an ultra low-profile connector system designed for tight packaging applications. The PanelMate name derives from the original flat-panel display applications for which it was designed.

The series today includes both crimp and FPC receptacles along with shielded and unshielded headers in several mating heights. With its versatile range of options, PanelMate is the ultimate low-profile solution for many of today's thin and light equipment needs.

PRODUCT FAMILY MATRIX

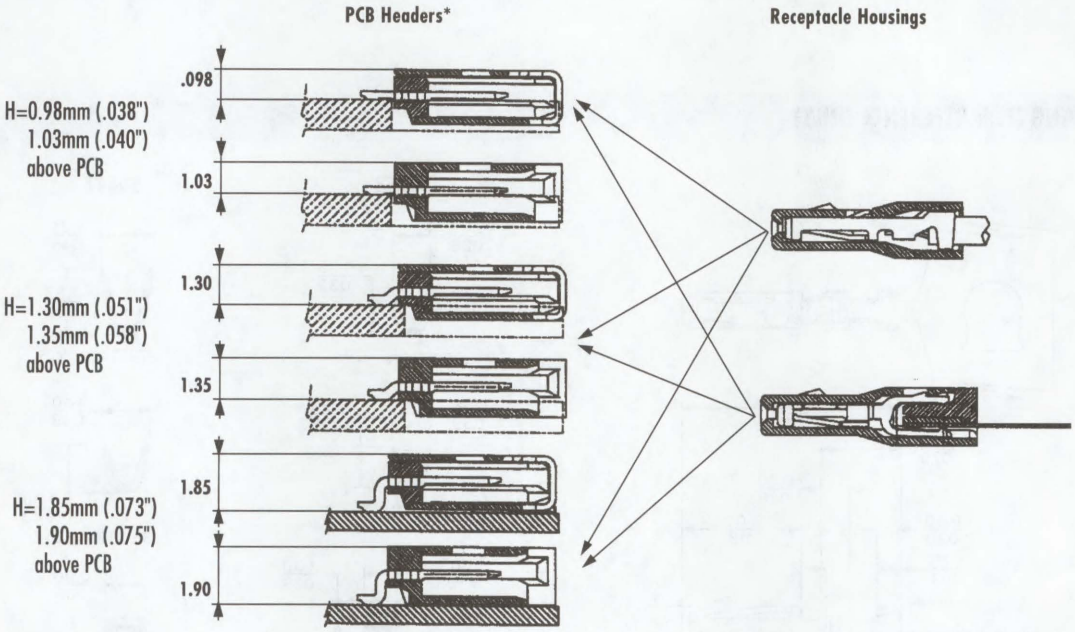

* For above series, shielded headers are shown on top and unshielded headers shown below

MOLEX QUASI-TWIST™ AND RANDOM-CROSS™ FPC TECHNOLOGY FOR HIGH SPEED SIGNAL TRANSMISSION

The increase in CPU and bus speeds for portable equipment has created the need for high density cables and connectors which can provide good EMI control and matched signal impedance. Molex has developed two FPC solutions, Quasi-Twist and Random-Cross, that can be used with Molex's FFC/FPC PanelMate receptacle to address these needs for LCD and other high speed applications.

Quasi-Twist: Similar in function to twisted pair cable, the Quasi-Twist concept suppresses unnecessary radiation by turning a reverse loop. The trace width gradually narrows as it approaches on intersection, thus reducing crosstalk and providing adjustment of differential impedance.

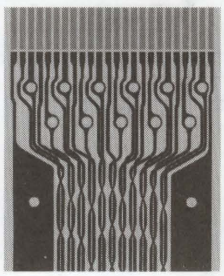

Random-Cross: This concept utilizes FPC microstrip signal lines on one side and a "random-cross" pattern for the mesh grounding on the other. Grounding and signal pattern lines therefore only intersect for short distances. This provides less variation of impedance and compatibility with any pattern design.

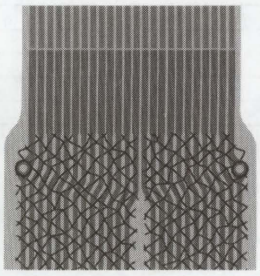

1.25mm (.049") Pitch PanelMate™ Wire-To-Board Crimp Terminal

50641/50753

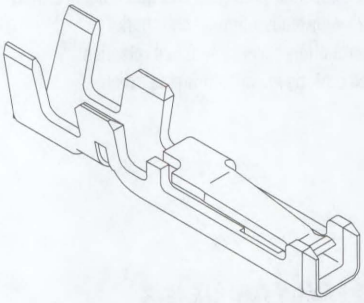

FEATURES AND SPECIFICATIONS

Features and Benefits

- Box-style contact design provides protection and secure mating force
- Locking tang latches into housing window

Reference Information

Packaging: Reel or bag (see Table)
Use With: 51146
Designed In: Millimeters

Electrical

Voltage: 125V
Current: 1.0A
Contact Resistance: 20mΩ max.
Dielectric Withstanding Voltage: 250V AC
Insulation Resistance: 100 MΩ min.

Physical

Contact: Phosphor Bronze
Plating: Gold over Nickel
Wire Range: 28 to 32 AWG
Insulation Diameter:
50753—0.40 to 0.55mm (.016 to .022") max.
50641—0.50 to 0.90mm (.020 to .035") max.
Strip Length: 1.3 to 1.7mm

CATALOG DRAWING (FOR REFERENCE ONLY)

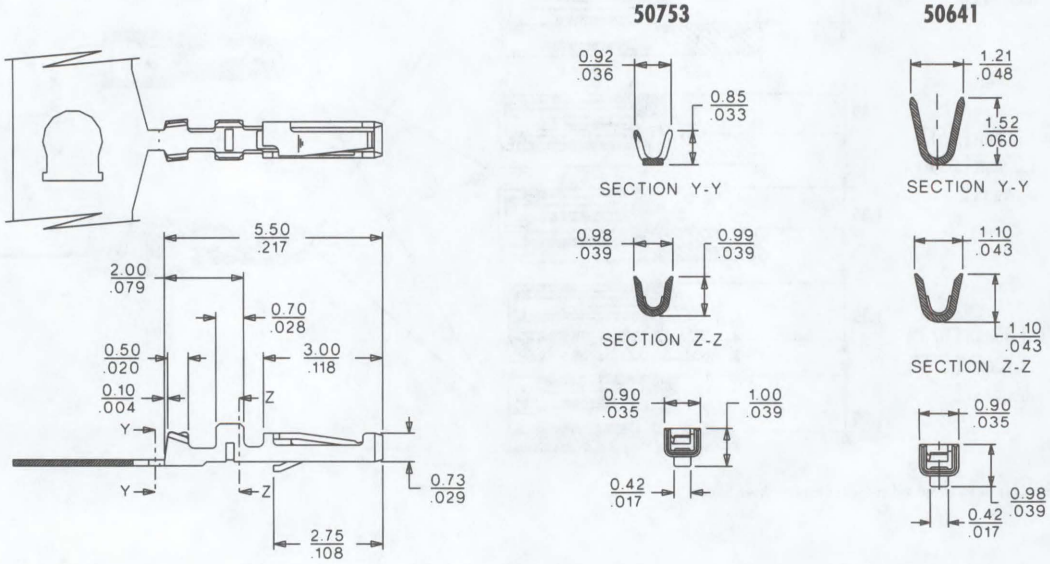

ORDERING INFORMATION

Order No.	Packaging	Wire Gauge
50641-8041	Reel	28 to 30 AWG
50641-8141	Bag	28 to 30 AWG
50753-8041	Reel	30 to 32 AWG
50753-8141	Bag	30 to 32 AWG

1.25mm (.049") Pitch PanelMate™ Wire-to-Board Housing

51146

Ultra Low Profile

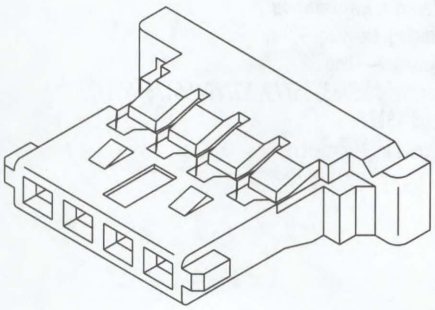

FEATURES AND SPECIFICATIONS

Features and Benefits

- Sizes 2 to 30 circuits
- Very thin design (1.80mm)
- Housing lance provides extra terminal retention
- Friction lock provides secure mating
- Polarized design

Reference Information

Packaging: Bag
Use With: 50641 or 50753 terminal
Mates With: 53779, 53780, 55063, 55176, 55177 and 55178
Designed In: Millimeters

Electrical

Voltage: 125V
Current: 1.0A
Contact Resistance: 20mΩ max.
Dielectric Withstanding Voltage:
Mated with 55063, 53779 or 53780—250V AC
Mated with 55176, 55177 or 55178—500V AC
Insulation Resistance: 100 MΩ min.

Physical

Housing: PBTP, UL 94V-0
Operating Temperature:
Mated with 55063, 53779 or 53780 — -40 to +85°C
Mated with 55176, 55177 or 55178 — -40 to +105°C

CATALOG DRAWING (FOR REFERENCE ONLY)

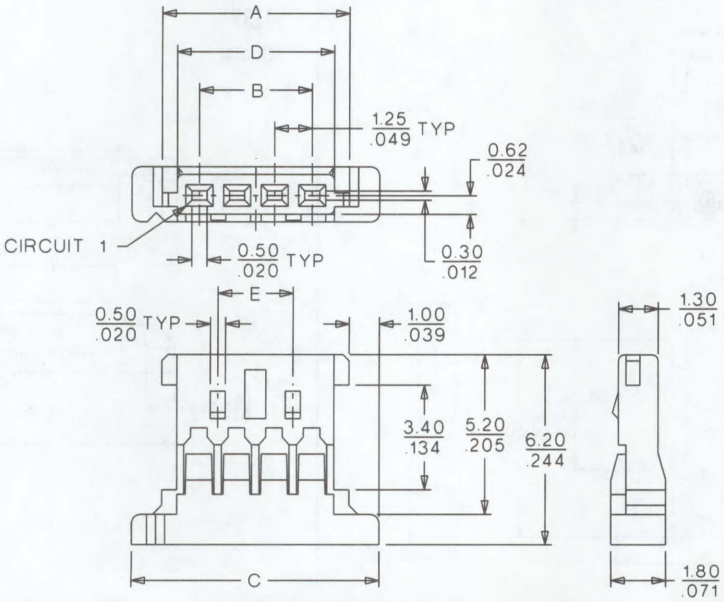

ORDERING INFORMATION AND DIMENSIONS

Circuits	Order No.	Dimension				
		A	B	C	D	E
2	51146-0200	3.72 (.146)	1.25 (.049)	5.72 (.225)	2.72 (.107)	
3	51146-0300	4.97 (.195)	2.50 (.098)	6.97 (.274)	3.97 (.156)	
4	51146-0400	6.22 (.245)	3.75 (.148)	8.22 (.324)	5.22 (.206)	2.50 (.098)
5	51146-0500	7.47 (.294)	5.00 (.197)	9.47 (.373)	6.47 (.255)	3.75 (.148)
6	51146-0600	8.72 (.343)	6.25 (.246)	10.72 (.422)	7.72 (.304)	5.00 (.197)
7	51146-0700	9.97 (.393)	7.50 (.295)	11.97 (.471)	8.97 (.353)	6.25 (.246)
8	51146-0800	11.22 (.442)	8.75 (.334)	13.22 (.520)	10.22 (.402)	7.50 (.296)
9	51146-0900	12.47 (.491)	10.00 (.394)	14.47 (.570)	11.47 (.452)	8.75 (.344)
14	51146-1400	18.72 (.737)	16.25 (.640)	20.72 (.816)	17.72 (.695)	15.00 (.591)
15	51146-1500	19.97 (.786)	17.50 (.689)	21.97 (.865)	18.97 (.747)	16.25 (.640)
20	51146-2000	26.22 (1.032)	23.75 (.935)	28.22 (1.111)	25.22 (.993)	22.50 (.886)
22	51146-2200	28.72 (1.131)	26.25 (1.033)	30.72 (1.209)	27.72 (1.091)	22.50 (.886)
26	51146-2600	33.72 (1.328)	31.25 (1.230)	35.72 (1.406)	32.72 (1.288)	22.50 (.886)
30	51146-3000	38.72 (1.524)	36.25 (1.427)	40.72 (1.603)	37.72 (1.485)	22.50 (.886)

1.25mm (.049") Pitch PanelMate™ FPC Housing and Actuator

54281/54282

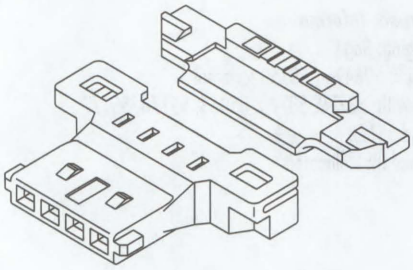

FEATURES AND SPECIFICATIONS

Features and Benefits

- Sizes 14 and 20 circuits
- For 0.30mm (.012") thick FPC
- Very thin design: 1.85mm (.073")
- Snap-in actuators enable easy assembly and secure FPC connection
- Friction lock provides secure mating
- Polarized design
- Hand tool available for standard FFC/FPC cable (Contact Molex for details)

Reference Information

Packaging: Housing—Tray
Actuator—Bag
Mates With: 55063, 53779, 53780, 55176, 55177 and 55178
Designed In: Millimeters

Electrical

Voltage: 125V
Current: 1.0A
Contact Resistance: 40mΩ max.
Dielectric Withstanding Voltage: 250V AC/1 min.
Insulation Resistance: 100 MΩ min.

Physical

Housing: 4/6 nylon, UL 94V-0
Actuator: Black PPS, UL 94V-0
Contact: Phosphor Bronze
Plating: Gold over Nickel on mating side; Tin/Lead over Nickel on FPC side
Operating Temperature: -40 to +85°C

CATALOG DRAWING (FOR REFERENCE ONLY)

54281
Housing

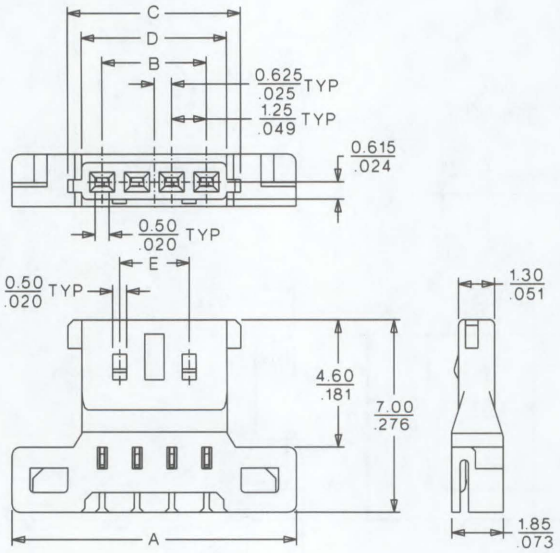

54282
Actuator

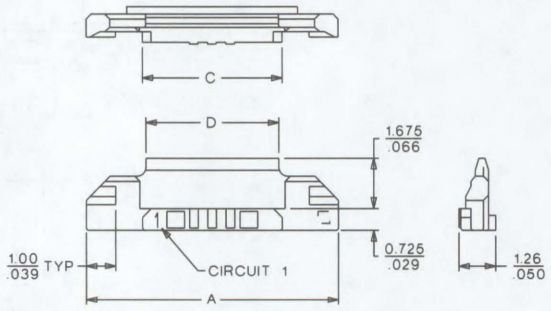

ORDERING INFORMATION AND DIMENSIONS

Circuits	Housing Order No.	Dimension				
		A	B	C	D	E
14	54281-1410	22.72 (.894)	16.25 (.640)	18.72 (.737)	17.72 (.698)	15.00 (.591)
20	54281-2010	30.22 (1.190)	23.75 (.935)	26.22 (1.032)	25.22 (.993)	22.50 (.886)

Circuits	Actuator Order No.	Dimension		
		A	C	D
14	54282-1401	21.12 (.831)	17.28 (.680)	17.05 (.671)
20	54282-2001	28.62 (1.127)	24.78 (.976)	24.55 (.967)

1.25mm (.049") Pitch PanelMate™ Wire-To-Board Header

55063

Right Angle, SMT 1.03mm (.041") Profile

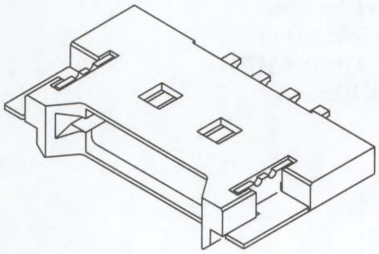

FEATURES AND SPECIFICATIONS

Features and Benefits

- Sizes 2 to 30 circuits
- Mid-plane design is recessed into PCB to provide extremely low profile of 1.03mm (.041")
- Durable blade-type pins protect against damage during mating
- Metal solder tabs provide PCB retention and strain relief for SMT tails
- Solder-conducing fillet SMT tail design helps ensure stable solder joints
- Fully-shrouded anti-flux wicking design protects contacts during soldering and cleaning processes

Mating Dimensions

1. 55063/51146/50641or 50753
   H=1.03mm (.041")
   W=7.3mm (.287")
2. 55063/54281
   H=1.03mm (.041")
   W=8.10mm (.319")

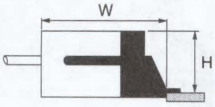

Reference Information

Packaging: Embossed tape
Mates With: 51146 and 54281
Designed In: Millimeters

Electrical

Voltage: 125V
Current: 1.0A
Contact Resistance: Mated With 51146— 20mΩ max.
Mated With 54281— 40mΩ max.
Dielectric Withstanding Voltage: 250V AC/1 min.
Insulation Resistance: 100 MΩ min.

Physical

Housing: PPHS, UL 94V-0
Contact: Phosphor Bronze
Plating: Gold plating in contact area;
Tin/Lead plating in tail area
Solder Tabs: Phosphor Bronze, Tin/Lead plating
Operating Temperature: -40 to +85°C

CATALOG DRAWING (FOR REFERENCE ONLY)

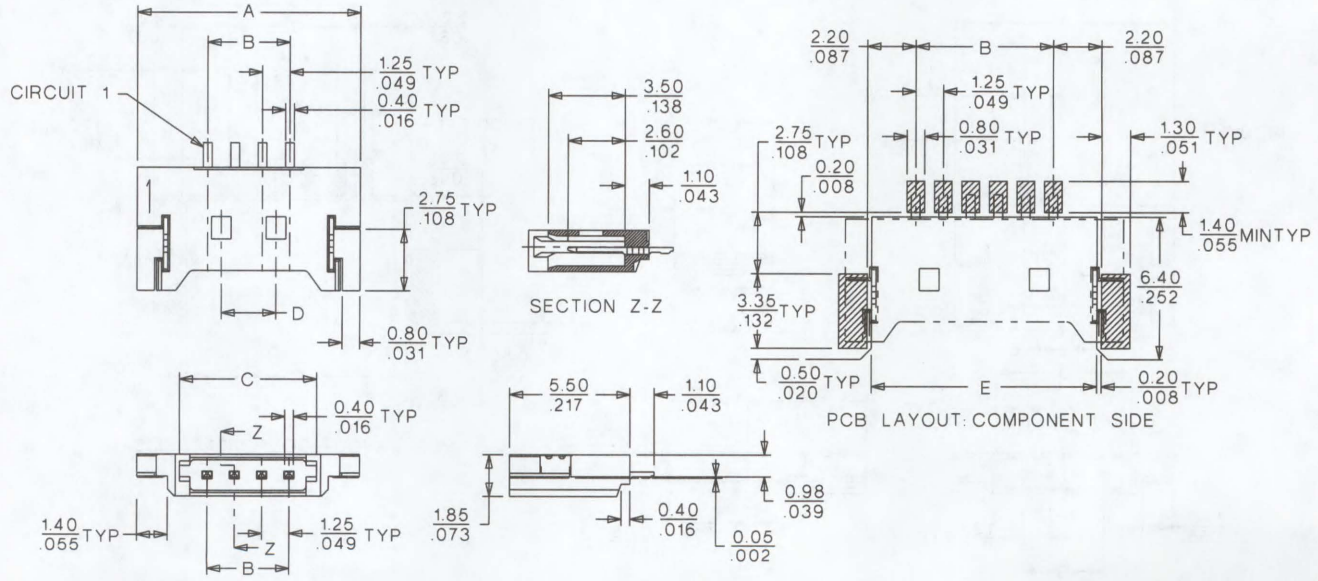

ORDERING INFORMATION AND DIMENSIONS

Circuits	Order No.	Dimension					Tape Width
		A	B	C	D	E	
2	55063-0290	7.65 (.301)	1.25 (.049)	3.77 (.148)		5.25 (.207)	16.00 (.629)
3	55063-0390	8.90 (.350)	2.50 (.098)	5.02 (.198)		6.50 (.256)	
4	55063-0490	10.15 (.400)	3.75 (.148)	6.27 (.247)	2.50 (.0.98)	7.75 (.305)	24.00 (.945)
5	55063-0590	11.40 (.449)	5.00 (.197)	7.52 (.296)	3.75 (.148)	9.00 (.354)	
6	55063-0690	12.65 (.498)	6.25 (.246)	8.77 (.345)	5.00 (.197)	10.25 (.404)	
7	55063-0790	13.90 (.547)	7.50 (.295)	10.02 (.394)	6.25 (.246)	11.50 (.453)	
8	55063-0890	15.15 (.596)	8.75 (.344)	11.27 (.444)	7.50 (.295)	12.75 (.502)	
9	55063-0990	16.40 (.646)	10.00 (.394)	12.52 (.493)	8.75 (.344)	14.00 (.551)	
14	55063-1490	22.65 (.892)	16.25 (.640)	18.77 (.739)	15.00 (.591)	20.25 (.797)	44.00 (1.732)
15	55063-1590	23.90 (.941)	17.50 (.689)	20.02 (.788)	16.25 (.640)	21.50 (.846)	
20	55063-2090	30.15 (1.187)	23.75 (.935)	26.27 (1.034)	22.50 (.886)	27.75 (1.093)	
22	55063-2290	32.65 (1.285)	26.25 (1.033)	28.77 (1.133)	22.50 (.886)	30.25 (1.191)	
26	55063-2690	37.65 (1.482)	31.25 (1.230)	33.77 (1.330)	22.50 (.886)	35.25 (1.388)	56.00 (2.205)
30	55063-3090	42.65 (1.679)	36.25 (1.427)	38.77 (1.526)	22.50 (.886)	40.25 (1.585)	

1.25mm (.049") Pitch PanelMate™ Wire-to-Board Header

53779

Right Angle, SMT 1.35mm (.053") Profile

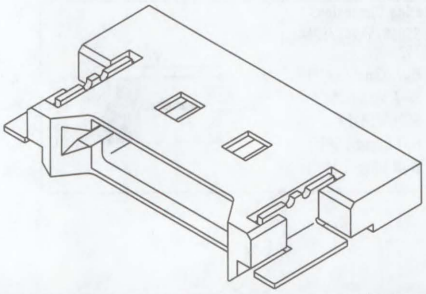

FEATURES AND SPECIFICATIONS

Features and Benefits

- Sizes 2 to 20 circuits
- Header is recessed into PCB to provide extremely low mating profile of 1.35mm (.053")
- Durable blade-type pins protect against damage during mating
- Metal solder tabs provide PCB retention and strain relief for SMT tails
- Solder-conducing fillet SMT tail design helps ensure stable solder joints
- Fully-shrouded anti-flux wicking design protects contacts during soldering and cleaning processes

Reference Information

Packaging: Embossed tape
Mates With: 51146 and 54281
Designed In: Millimeters

Electrical

Voltage: 125V
Current: 1.0A
Contact Resistance:
Mated with 51146—20mΩ max.
Mated with 54281—40mΩ max.
Dielectric Withstanding Voltage: 250V AC
Insulation Resistance: 100 MΩ min.

Physical

Housing: PPHS, UL 94V-0
Contact: Phosphor Bronze
Plating: Gold (Tin/Lead on SMT tails)
Solder Tabs: Phosphor Bronze, Tin/Lead plating
Operating Temperature: -40 to +85°C

Mating Dimensions

1. 53779 • 51146 • 50641 or 50753
   H=1.35mm (.053")
   W=7.30mm (.287")
2. 53779 • 54281
   H=1.35mm (.053")
   W=8.10mm (.319")

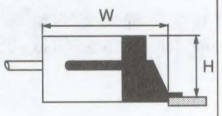

CATALOG DRAWING (FOR REFERENCE ONLY)

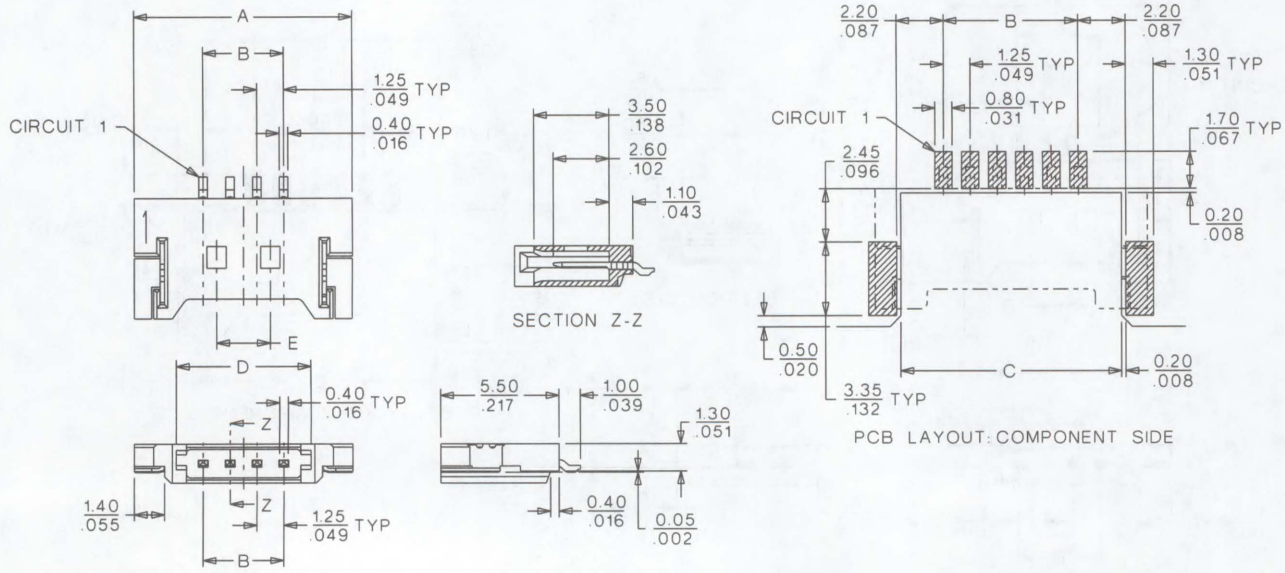

ORDERING INFORMATION AND DIMENSIONS

Circuits	Order No.	Dimension					Carrier Tape Width
		A	B	C	D	E	
2	53779-0290	7.65 (.301)	1.25 (.049)	5.25 (.207)	3.77 (.148)		16.00 (.629)
3	53779-0390	8.90 (.350)	2.50 (.098)	6.50 (.256)	5.02 (.198)		16.00 (.629)
4	53779-0490	10.15 (.400)	3.75 (.148)	7.75 (.305)	6.27 (.247)	2.50 (.098)	24.00 (.945)
5	53779-0590	11.40 (.449)	5.00 (.197)	9.00 (.354)	7.52 (.296)	3.75 (.148)	24.00 (.945)
6	53779-0690	12.65 (.498)	6.25 (.246)	10.25 (.404)	8.77 (.345)	5.00 (.197)	24.00 (.945)
7	53779-0790	13.90 (.547)	7.50 (.295)	11.50 (.453)	10.02 (.394)	6.25 (.246)	24.00 (.945)
8	53779-0890	15.15 (.596)	8.75 (.344)	12.75 (.502)	11.27 (.444)	7.50 (.296)	24.00 (.945)
9	53779-0990	16.40 (.646)	10.00 (.394)	14.00 (.551)	12.52 (.493)	8.75 (.344)	24.00 (.945)
14	53779-1490	22.65 (.892)	16.25 (.640)	20.25 (.797)	18.77 (.739)	15.00 (.591)	44.00 (1.732)
15	53779-1590	23.90 (.941)	17.50 (.689)	21.50 (.846)	20.02 (.788)	16.25 (.640)	44.00 (1.732)
20	53779-2090	30.15 (1.187)	23.75 (.935)	27.75 (.093)	26.27 (1.034)	22.50 (.886)	44.00 (1.732)
22	53779-2290	32.65 (1.285)	26.25 (1.033)	30.25 (1.191)	28.77 (1.133)	22.50 (.886)	44.00 (1.732)
26	53779-2690	37.65 (1.482)	31.25 (1.230)	35.25 (1.388)	33.77 (1.330)	22.50 (.886)	56.00 (2.205)

1.25mm (.049") Pitch PanelMate™ Wire-to-Board Header

53780

Right Angle, SMT 1.90mm (.075") Profile

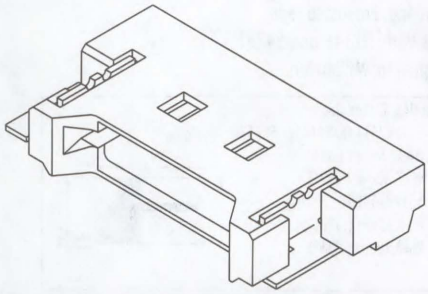

FEATURES AND SPECIFICATIONS

Features and Benefits

- Sizes 2 to 20 circuits
- Ultra low mating profile of 1.90mm (.075")
- Durable blade-type pins protect againt damage during mating
- Metal solder tabs provide PCB retention and strain relief for SMT tails
- Solder-conducing fillet SMT tail design helps ensure stable solder joints
- Fully-shrouded anti-flux wicking design protects contacts during soldering and cleaning processes

Reference Information

Packaging: Embossed tape
Mates With: 51146 and 54281
Designed In: Millimeters

Electrical

Voltage: 125V
Current: 1.0A
Contact Resistance:
Mated with 51146—20mΩ max.
Mated with 54281—40mΩ max.
Dielectric Withstanding Voltage: 250V AC
Insulation Resistance: 100 MΩ min.

Physical

Housing: PPHS, UL 94V-0
Contact: Phosphor Bronze
Plating: Gold (Tin/Lead on SMT tails)
Solder Tabs: Phosphor Bronze, Tin/Lead plating
Operating Temperature: -40 to +85°C

Mating Dimensions

1. 53780 • 51146 • 50641 or 50753
   H=1.90mm (.075")
   W=7.30mm (.287")
2. 53780 • 54281
   H=1.90mm (.075")
   W=8.10mm (.319")

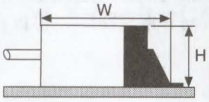

CATALOG DRAWING (FOR REFERENCE ONLY)

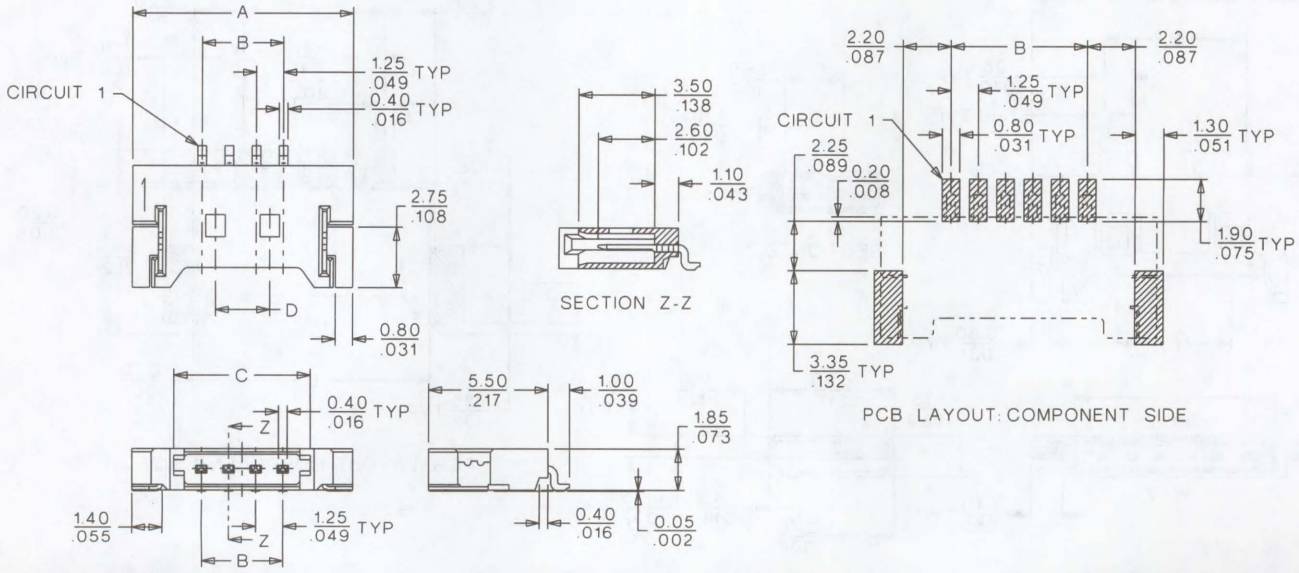

ORDERING INFORMATION AND DIMENSIONS

Circuits	Order No.	Dimension				Carrier Tape Width
		A	B	C	D	
2	53780-0290	7.65 (.301)	1.25 (.049)	3.77 (.148)		16.00 (.630)
3	53780-0390	8.90 (.350)	2.50 (.098)	5.02 (.189)		16.00 (.630)
4	53780-0490	10.15 (.400)	3.75 (.148)	6.27 (.247)	2.50 (.098)	24.00 (.945)
5	53780-0590	11.40 (.449)	5.00 (.197)	7.52 (.296)	3.75 (.148)	24.00 (.945)
6	53780-0690	12.65 (.498)	6.25 (.246)	8.77 (.345)	5.00 (.196)	24.00 (.945)
7	53780-0790	13.90 (.547)	7.50 (.295)	10.02 (.394)	6.25 (.246)	24.00 (.945)
8	53780-0890	15.15 (.596)	8.75 (.344)	11.27 (.502)	7.50 (.296)	24.00 (.945)
9	53780-0990	16.40 (.646)	10.00 (.394)	12.52 (.493)	8.75 (.344)	24.00 (.945)
14	53780-1490	22.65 (.892)	16.25 (.640)	18.77 (.739)	15.00 (.591)	44.00 (1.732)
15	53780-1590	23.90 (.941)	17.50 (.689)	20.02 (.789)	16.25 (.640)	44.00 (1.732)
20	53780-2090	30.15 (1.187)	23.75 (.935)	26.27 (1.034)	22.50 (.886)	44.00 (1.732)

1.25mm (.049") Pitch PanelMate™ Wire-To-Board Shielded Header

55178

Right Angle, SMT 0.98mm (.0386") Profile

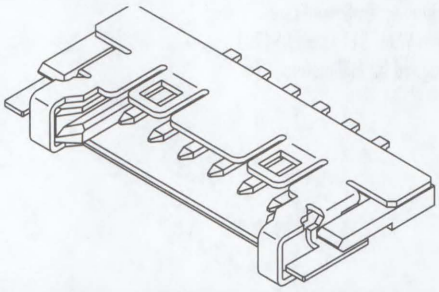

FEATURES AND SPECIFICATIONS

Features and Benefits

- Sizes 14, 20 and 30 circuits
- Metal shielding provides EMI protection
- Mid-plane design is recessed into PCB to provide extremely low profile of 0.98mm (.0386")
- Durable blade-type pins protect against damage during mating
- Metal solder tabs provide PCB retention and strain relief for SMT tails
- Solder-conducing fillet SMT tail design helps ensure stable solder joints

Reference Information

Packaging: Embossed tape
Mates With: 51146 and 54281
Designed In: Millimeters

Mating Dimensions

1. 55178/51146/50641or 50753
   H=0.98mm (.0386")
   W=7.30mm (.287")
2. 55178/54281
   H=0.98mm (.0386")
   W=8.10mm (.319")

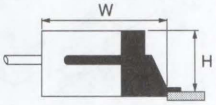

Electrical

Voltage: 125V
Current: 1.0A
Contact Resistance: Mated With 51146— 20mΩ max.
Mated With 54281— 40mΩ max.
Dielectric Withstanding Voltage:
Mated With 51146— 500V AC/1 min.
Mated With 54281— 250V AC/1 min.
Insulation Resistance: 100 MΩ min.

Physical

Housing: PPHS, UL 94V-0
Contact: Phosphor Bronze
Plating: Gold plating in contact area;
Tin/Lead plating in tail area
Shell: Phosphor Bronze, Tin/Lead plating
Solder Tabs: Phosphor Bronze, Tin/Lead plating
Operating Temperature: Mated With 51146— -40 to +105°C
Mated With 54281— -40 to +85°C

CATALOG DRAWING (FOR REFERENCE ONLY)

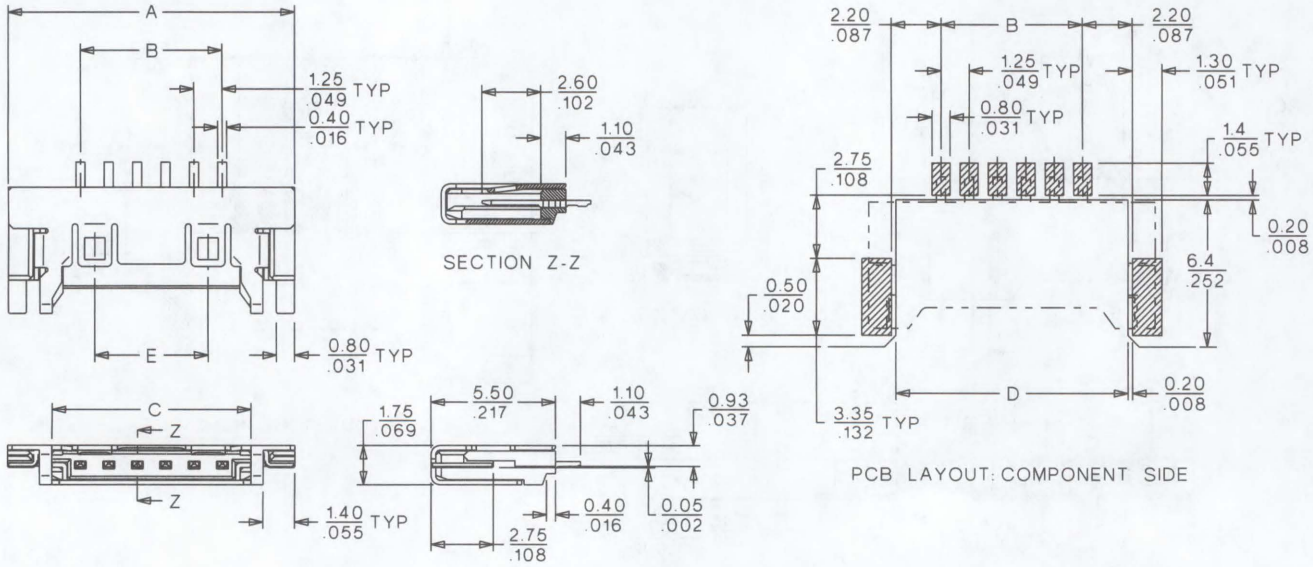

ORDERING INFORMATION AND DIMENSIONS

Circuits	Order No.	Dimension					Tape Width
		A	B	C	D	E	
14	55178-1491	22.65 (.892)	16.25 (.640)	18.77 (.739)	20.25 (.797)	15.00 (.591)	44.00 (1.732)
20	55178-2091	30.15 (1.187)	23.75 (.935)	26.27 (1.034)	27.75 (1.093)	22.50 (.886)	
30	55178-3091	42.65 (1.679)	36.25 (1.427)	38.77 (1.526)	40.25 (1.585)	22.50 (.886)	56.00 (2.205)

1.25mm (.049") Pitch PanelMate™ Wire-To-Board Shielded Header

55177

Right Angle, SMT 1.30mm (.051") Profile

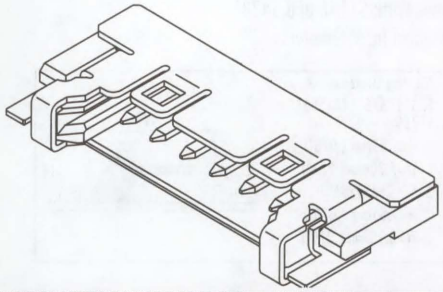

FEATURES AND SPECIFICATIONS

Features and Benefits

- Sizes 14, 20 and 30 circuits
- Metal shielding provides EMI protection
- Header is recessed into PCB to provide extremely low profile of 1.30mm (.051")
- Durable blade-type pins protect against damage during mating
- Metal solder tabs provide PCB retention and strain relief for SMT tails
- Solder-conducing fillet SMT tail design helps ensure stable solder joints

Reference Information

Packaging: Embossed tape
Mates With: 51146 and 54281
Designed In: Millimeters

Mating Dimensions

1. 55177/51146/50641or 50753
   H=1.30mm (.051")
   W=7.30mm (.287")
2. 55177/54281
   H=1.30mm (.051")
   W=8.10mm (.319")

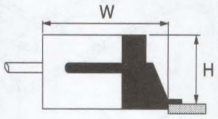

Electrical

Voltage: 125V
Current: 1.0A
Contact Resistance: Mated With 51146— 20mΩ max.
Mated With 54281— 40mΩ max.
Dielectric Withstanding Voltage:
Mated With 51146— 500V AC/1 min.
Mated With 54281— 250V AC/1 min.
Insulation Resistance: 100 MΩ min.

Physical

Housing: LCP, UL 94V-0
Contact: Phosphor Bronze
Plating: Gold plating in contact area;
Tin/Lead plating in tail area
Shell: Phosphor Bronze, Tin/Lead plating
Solder Tabs: Phosphor Bronze, Tin/Lead plating
Operating Temperature: Mated With 51146— -40 to +105°C
Mated With 54281— -40 to +85°C

CATALOG DRAWING (FOR REFERENCE ONLY)

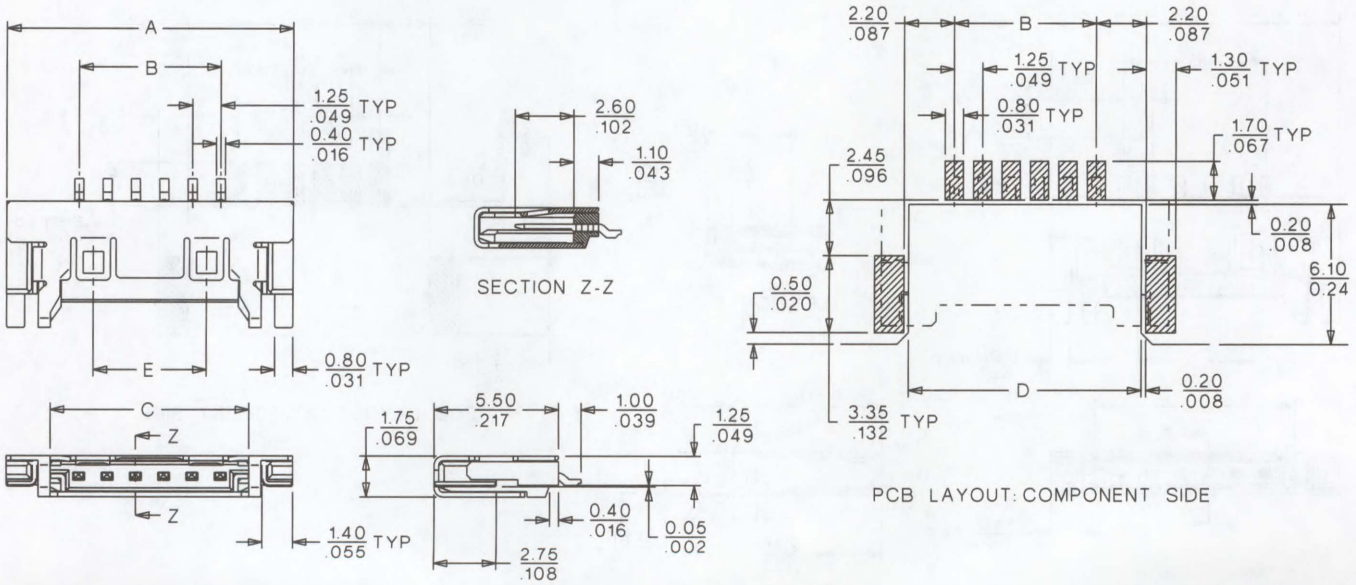

ORDERING INFORMATION AND DIMENSIONS

Circuits	Order No.	Dimension					Tape Width
		A	B	C	D	E	
14	55177-1491	22.65 (.892)	16.25 (.640)	18.77 (.739)	20.25 (.797)	15.00 (.591)	44.00 (1.732)
20	55177-2091	30.15 (1.187)	23.75 (.935)	26.27 (1.034)	27.75 (1.093)	22.50 (.886)	
30	55177-3091	42.65 (1.679)	36.25 (1.427)	38.77 (1.526)	40.25 (1.585)	22.50 (.886)	56.00 (2.205)

1.25mm (.049") Pitch PanelMate™ Wire-To-Board Shielded Header

55176

Right Angle, SMT 1.85mm (.073") Profile

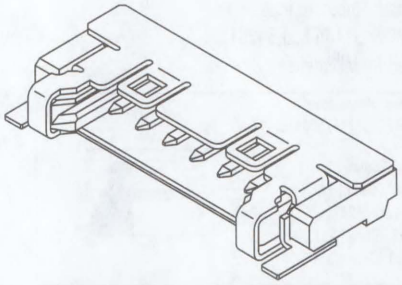

FEATURES AND SPECIFICATIONS

Features and Benefits

- Sizes 14, 20 and 30 circuits
- Metal shielding provides EMI protection
- Ultra low mating profile of 1.85mm (.073")
- Durable blade-type pins protect against damage during mating
- Metal solder tabs provide PCB retention and strain relief for SMT tails
- Solder-conducing fillet SMT tail design helps ensure stable solder joints

Reference Information

Packaging: Embossed tape
Mates With: 51146 and 54281
Designed In: Millimeters

Mating Dimensions

1. 55176/51146/50641or 50753
   H=1.85mm (.073")
   W=7.30mm (.287")
2. 55176/54281
   H=1.85mm (.073")
   W=8.10mm (.319")

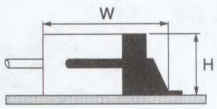

Electrical

Voltage: 125V
Current: 1.0A
Contact Resistance: Mated With 51146— 20mΩ max.
Mated With 54281— 40mΩ max.
Dielectric Withstanding Voltage:
Mated With 51146— 500V AC/1 min.
Mated With 54281— 250V AC/1 min.
Insulation Resistance: 100 MΩ min.

Physical

Housing: LCP, UL 94V-0
Contact: Phosphor Bronze
Plating: Gold plating in contact area;
Tin/Lead plating in tail area
Shell: Phosphor Bronze, Tin/Lead plating
Solder Tabs: Phosphor Bronze, Tin/Lead plating
Operating Temperature: Mated With 51146— -40 to +105°C
Mated With 54281— -40 to +85°C

CATALOG DRAWING (FOR REFERENCE ONLY)

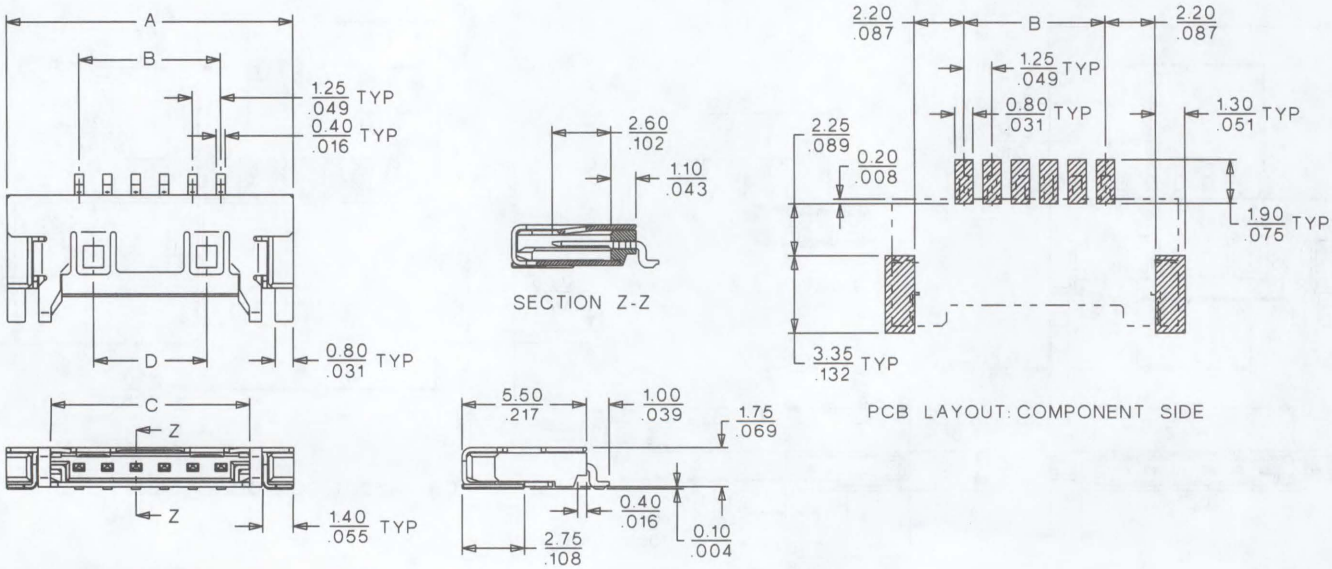

ORDERING INFORMATION AND DIMENSIONS

Circuits	Order No.	Dimension				Tape Width
		A	B	C	E	
14	55176-1491	22.65 (.892)	16.25 (.640)	18.77 (.739)	15.00 (.591)	44.00 (1.732)
20	55176-2091	30.15 (1.187)	23.75 (.935)	26.27 (1.034)	22.50 (.886)	
30	55176-3091	42.65 (1.679)	36.25 (1.427)	38.77 (1.526)	22.50 (.886)	56.00 (2.205)

1.25mm (.049") Pitch Mini Mi II System Wire-to-Board Receptacle

54596

Single Row IDT

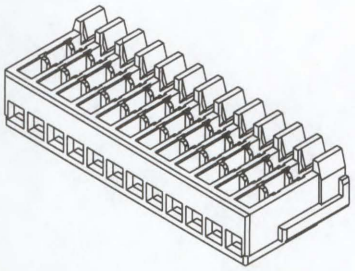

FEATURES AND SPECIFICATIONS

Features and Benefits

- Sizes 2 to 20 circuits
- IDT provides secure and cost-effective termination
- Contact design protects header pins during mating/unmating
- Housing length designed for easy handling
- IDT guide slots facilitate wire placement
- Side ribs provide polarization and locking to clip

Reference Information

Product Specification: PS-54596-007
Packaging: Bag
Mates With: 55447, 55454 and 55451 (with 54597 clip)
Use With: 54597 clip for dual-row applications
Designed In: Millimeters

Electrical

Voltage: 100V
Current: 1.5A
Contact Resistance: 20mΩ max.
Dielectric Withstanding Voltage: 500V AC/1 min.
Insulation Resistance: 1000 MΩ min.

Physical

Housing: Nylon, UL 94V-0
Contact: Phosphor Bronze
Plating: Pre-Tin
Wire Range: 26 to 28 AWG
Insulation Range: 0.80 to 0.90mm (.031 to .035") dia.
Operating Temperature: -40 to +105°C

CATALOG DRAWING (FOR REFERENCE ONLY)

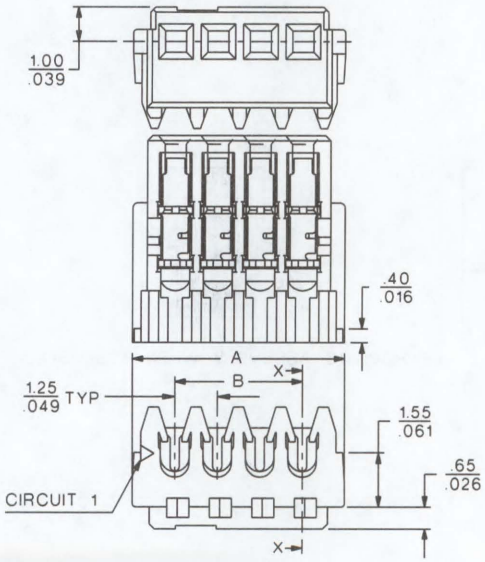

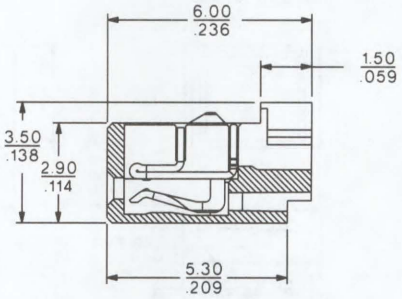

SECTION X-X

ORDERING INFORMATION AND DIMENSIONS

Circuits	Order No.	Dimension A	Dimension B
2	54596-0210	3.75 (.148)	1.25 (.049)
3	54596-0310	5.00 (.197)	2.50 (.098)
4	54596-0410	6.25 (.246)	3.75 (.148)
5	54596-0510	7.50 (.295)	5.00 (.197)
6	54596-0610	8.75 (.344)	6.25 (.246)
7	54596-0710	10.00 (.394)	7.50 (.295)
8	54596-0810	11.25 (.443)	8.75 (.344)
9	54596-0910	12.50 (.492)	10.00 (.394)
10	54596-1010	13.75 (.541)	11.25 (.443)
11	54596-1110	15.00 (.591)	12.50 (.492)

Circuits	Order No.	Dimension A	Dimension B
12	54596-1210	16.25 (.640)	13.75 (.541)
13	54596-1310	17.50 (.689)	15.00 (.591)
14	54596-1410	18.75 (.738)	16.25 (.640)
15	54596-1510	20.00 (.787)	17.50 (.689)
16	54596-1610	21.25 (.837)	18.75 (.738)
17	54596-1710	22.50 (.886)	20.00 (.787)
18	54596-1810	23.75 (.935)	21.25 (.837)
19	54596-1910	25.00 (.984)	22.50 (.886)
20	54596-2010	26.25 (1.033)	23.75 (.935)

1.25mm (.049") Pitch Mini Mi II System Clip

54597
Dual Row

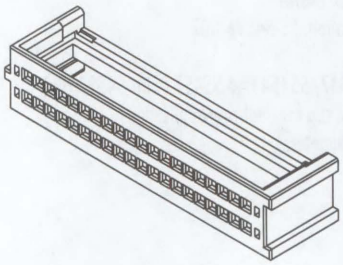

FEATURES AND SPECIFICATIONS

Features and Benefits
- Sizes 10 to 40 circuits
- Joins two single row receptacles (54596)
- Polarized to ensure correct mating orientation
- Locking feature ensures secure receptacle retention

Reference Information
Product Specification: PS-54596-007
Packaging: Bag
Mates With: 55451
Use With: 54596
Designed In: Millimeters

Physical
Housing: Nylon, UL 94V-0
Operating Temperature: -40 to +105°C

CATALOG DRAWING (FOR REFERENCE ONLY)

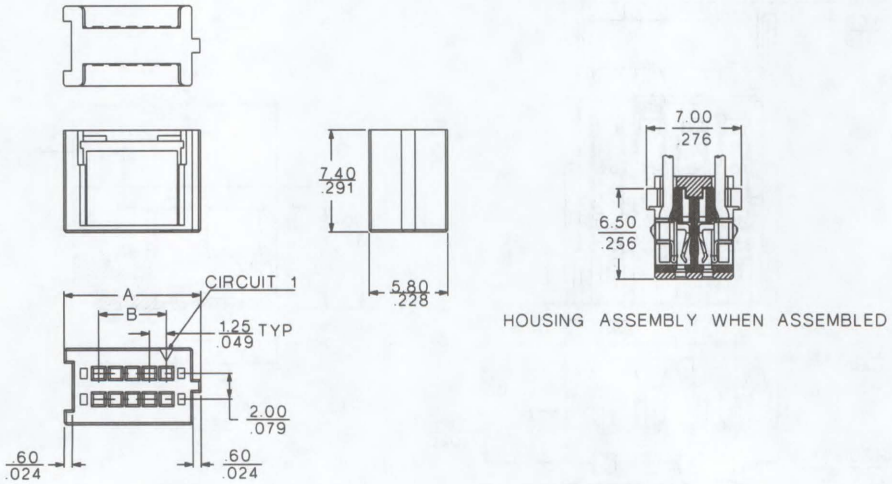

ORDERING INFORMATION AND DIMENSIONS

Circuits	Order No.	Dimension A	Dimension B
10	54597-1000	10.10 (.398)	5.00 (.197)
12	54597-1200	11.35 (.447)	6.25 (.246)
14	54597-1400	12.60 (.496)	7.50 (.295)
16	54597-1600	13.85 (.545)	8.75 (.344)
18	54597-1800	15.10 (.594)	10.00 (.394)
20	54597-2000	16.35 (.644)	11.25 (.443)
22	54597-2200	17.60 (.693)	12.50 (.492)
24	54597-2400	18.85 (.742)	13.75 (.541)

Circuits	Order No.	Dimension A	Dimension B
26	54597-2600	20.10 (.791)	15.00 (.591)
28	54597-2800	21.35 (.841)	16.25 (.640)
30	54597-3000	22.60 (.890)	17.50 (.689)
32	54597-3200	23.85 (.939)	18.75 (.738)
34	54597-3400	25.10 (.988)	20.00 (.787)
36	54597-3600	26.35 (1.037)	21.25 (.837)
38	54597-3800	27.60 (1.087)	22.50 (.886)
40	54597-4000	28.85 (1.136)	23.75 (.935)

1.25mm (.049") Pitch Mini Mi II System Wire-to-Board Header

55447

Single Row Vertical

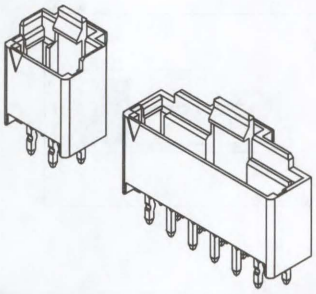

FEATURES AND SPECIFICATIONS

Features and Benefits

- Sizes 2 to 20 circuits
- Internal push-type positive lock provides secure retention and is compatible with automatic harnessing needs
- Kinked outer tails for additional PCB retention
- Polarized inner side-walls ensure correct mating orientation
- Bottom platform protects against flux intrusion
- Polarizing peg assists board placement

Reference Information

Product Specification: PS-54596-007
Packaging: Tray
Mates With: 54596
Designed In: Millimeters

Mating Dimensions
55447/54596
H=9.90mm (.390") W=6.30mm (.248")

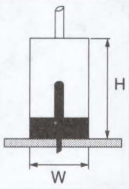

Electrical

Voltage: 100V
Current: 1.5A
Contact Resistance: 20mΩ max.
Dielectric Withstanding Voltage: 500V AC/1 min.
Insulation Resistance: 1000 MΩ min.

Physical

Housing: Nylon, UL 94V-0
Contact: Brass
Plating: Pre-Tin
Operating Temperature: -40 to +105°C

CATALOG DRAWING (FOR REFERENCE ONLY)

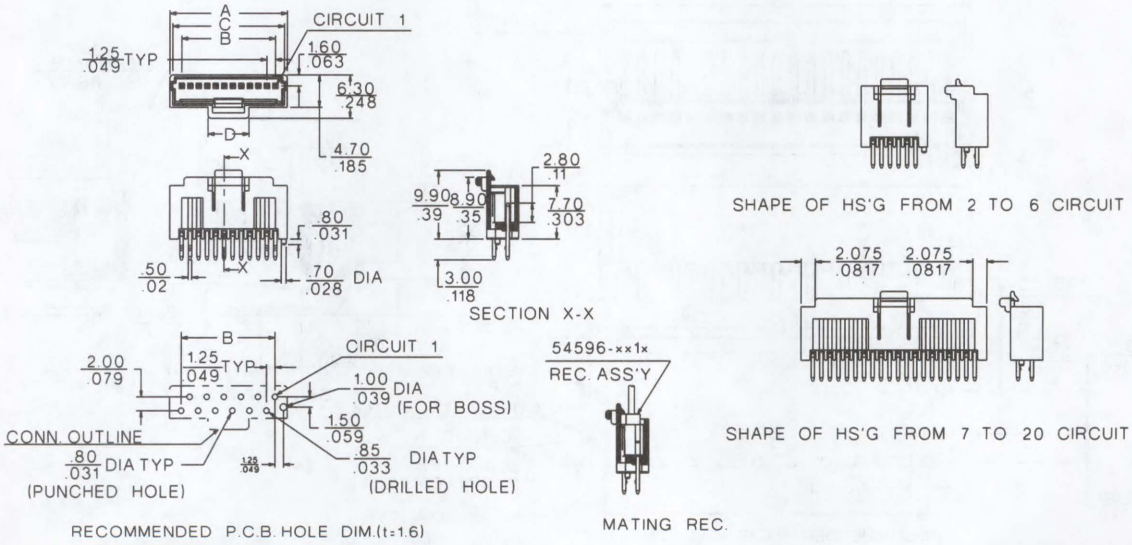

ORDERING INFORMATION AND DIMENSIONS

Circuits	Order No.	Dimension			
		A	B	C	D
2	55447-0210	4.75 (.187)	1.25 (.049)	3.90 (.154)	4.75 (.187)
3	55447-0310	6.00 (.236)	2.50 (.098)	5.15 (.203)	4.75 (.187)
4	55447-0410	7.25 (.285)	3.75 (.148)	6.40 (.252)	4.75 (.187)
5	55447-0510	8.50 (.335)	5.00 (.197)	7.65 (.301)	6.00 (.236)
6	55447-0610	9.75 (.384)	6.25 (.246)	8.90 (.350)	6.00 (.236)
7	55447-0710	11.00 (.433)	7.50 (.295)	10.15 (.400)	6.00 (.236)
8	55447-0810	12.25 (.482)	8.75 (.344)	11.40 (.449)	6.00 (.236)
9	55447-0910	13.50 (.531)	10.00 (.394)	12.65 (.498)	6.00 (.236)
10	55447-1010	14.75 (.581)	11.25 (.443)	13.90 (.547)	6.00 (.236)
11	55447-1110	16.00 (.630)	12.50 (.492)	15.15 (.596)	6.00 (.236)

Circuits	Order No.	Dimension			
		A	B	C	D
12	55447-1210	17.25 (.679)	13.75 (.541)	16.40 (.646)	6.00 (.236)
13	55447-1310	18.50 (.728)	15.00 (.591)	17.65 (.695)	6.00 (.236)
14	55447-1410	19.75 (.778)	16.25 (.640)	18.90 (.744)	6.00 (.236)
15	55447-1510	21.00 (.827)	17.50 (.689)	20.15 (.793)	6.00 (.236)
16	55447-1610	22.25 (.876)	18.75 (.738)	21.40 (.843)	6.00 (.236)
17	55447-1710	23.50 (.925)	20.00 (.787)	22.65 (.892)	6.00 (.236)
18	55447-1810	24.75 (.974)	21.25 (.837)	23.90 (.941)	6.00 (.236)
19	55447-1910	26.00 (1.024)	22.50 (.886)	25.15 (.990)	6.00 (.236)
20	55447-2010	27.25 (1.073)	23.75 (.935)	26.40 (1.039)	6.00 (.236)

1.25mm (.049") Pitch Mini Mi II System Wire-to-Board Header

55454
Single Row Right Angle

FEATURES AND SPECIFICATIONS

Features and Benefits
- Sizes 2 to 20 circuits
- Friction lock provides secure mating
- Kinked outer tails for additional PCB retention
- Polarized inner side-walls ensure correct mating orientaion
- Extended outer side-walls protect solder tails
- Polarizing pegs assist board placement

Reference Information
Product Specification: PS-54596-007
Packaging: Tray
Mates With: 54596
Designed In: Millimeters

Mating Dimensions
55454/54596
H=4.50mm (.177")
W=9.80mm (.386")

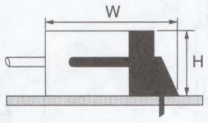

Electrical
Voltage: 100V
Current: 1.5A
Contact Resistance: 20mΩ max.
Dielectric Withstanding Voltage: 500V AC/1 min.
Insulation Resistance: 1000 MΩ min.

Physical
Housing: Nylon, UL 94V-0
Contact: Brass
Plating: Pre-Tin
Operating Temperature: -40 to +105°C

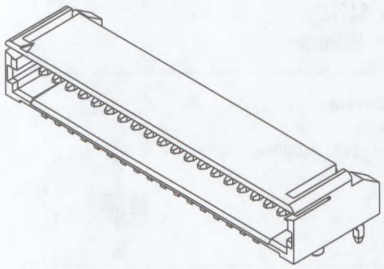

CATALOG DRAWING (FOR REFERENCE ONLY)

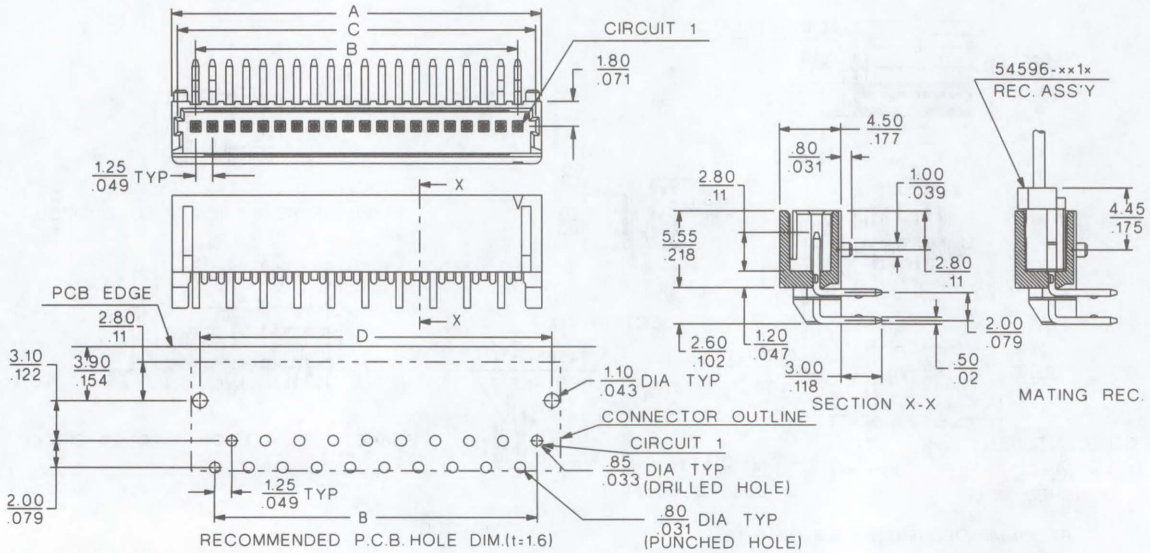

ORDERING INFORMATION AND DIMENSIONS

Circuits	Order No.	Dimension			
		A	B	C	D
2	55454-0210	4.75 (.187)	1.25 (.049)	3.90 (.154)	3.45 (.136)
3	55454-0310	6.00 (.236)	2.50 (.098)	5.15 (.203)	4.70 (.185)
4	55454-0410	7.25 (.285)	3.75 (.148)	6.40 (.252)	5.95 (.234)
5	55454-0510	8.50 (.335)	5.00 (.197)	7.65 (.301)	7.20 (.283)
6	55454-0610	9.75 (.384)	6.25 (.246)	8.90 (.350)	8.45 (.333)
7	55454-0710	11.00 (.433)	7.50 (.295)	10.15 (.400)	9.70 (.382)
8	55454-0810	12.25 (.482)	8.75 (.344)	11.40 (.449)	10.95 (.431)
9	55454-0910	13.50 (.531)	10.00 (.394)	12.65 (.498)	12.20 (.480)
10	55454-1010	14.75 (.581)	11.25 (.443)	13.90 (.547)	13.45 (.530)
11	55454-1110	16.00 (.630)	12.50 (.492)	15.15 (.596)	14.70 (.579)

Circuits	Order No.	Dimension			
		A	B	C	D
12	55454-1210	17.25 (.679)	13.75 (.541)	16.40 (.646)	15.95 (.628)
13	55454-1310	18.50 (.728)	15.00 (.591)	17.65 (.695)	17.20 (.677)
14	55454-1410	19.75 (.778)	16.25 (.640)	18.90 (.744)	18.45 (.726)
15	55454-1510	21.00 (.827)	17.50 (.689)	20.15 (.793)	19.70 (.776)
16	55454-1610	22.25 (.876)	18.75 (.738)	21.40 (.843)	20.95 (.825)
17	55454-1710	23.50 (.925)	20.00 (.787)	22.65 (.892)	22.20 (.874)
18	55454-1810	24.75 (.974)	21.25 (.837)	23.90 (.941)	23.45 (.923)
19	55454-1910	26.00 (1.024)	22.50 (.886)	25.15 (.990)	24.70 (.972)
20	55454-2010	27.25 (1.073)	23.75 (.935)	26.40 (1.039)	25.95 (1.022)

1.25mm (.049") Pitch Mini Mi II System Wire-to-Board Header

55451

Dual Row Vertical

FEATURES AND SPECIFICATIONS

Features and Benefits

- Sizes 10 to 40 circuits
- Friction lock provides secure mating
- Guide rail protects pins during mating/unmating and enables visual check for correct mating
- Kinked outer tails for additional PCB retention
- Polarized inner side-walls ensure correct mating orientation
- Polarizing peg assists board placement

Reference Information

Product Specification: PS-54596-007
Packaging: Tray
Mates With: 54596 (with 54597 clip)
Accepts: 54597 clip with two 54596 IDT receptacles
Designed In: Millimeters

Electrical

Voltage: 100V
Current: 1.5A
Contact Resistance: 20mΩ max.
Dielectric Withstanding Voltage: 500V AC/1 min.
Insulation Resistance: 1000 MΩ min.

Physical

Housing: Nylon, UL 94V-0
Contact: Brass
Plating: Pre-Tin
Operating Temperature: -40 to +105°C

Mating Dimensions
55451/54597/54596
H=9.80mm (.386") W=7.40mm (.291")

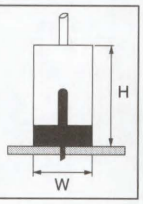

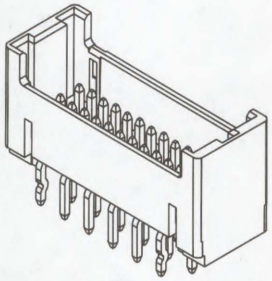

CATALOG DRAWING (FOR REFERENCE ONLY)

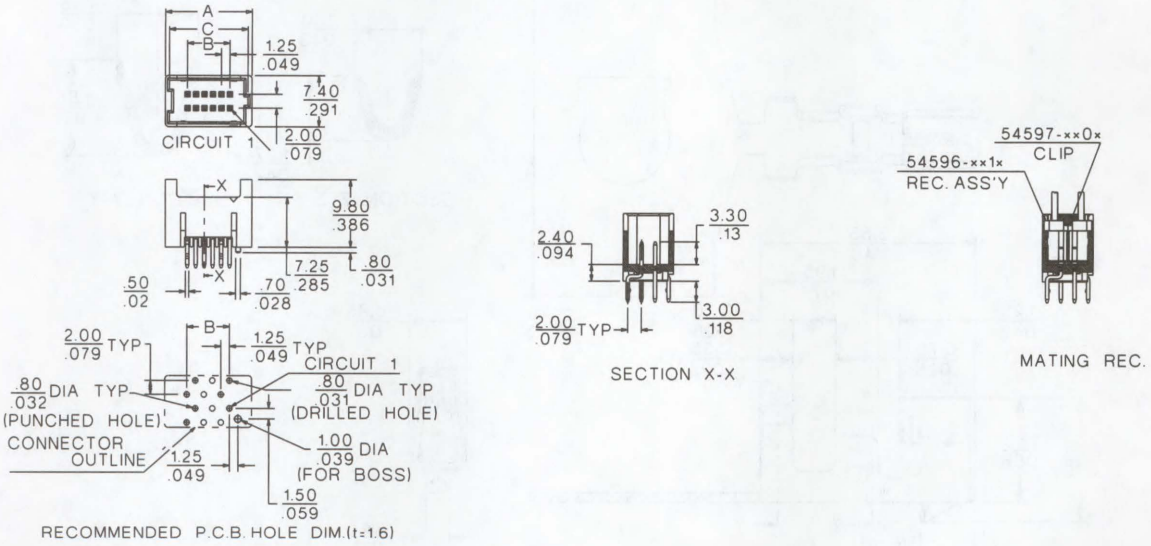

ORDERING INFORMATION AND DIMENSIONS

Circuits	Order No.	Dimension A	Dimension B	Dimension C
10	55451-1010	11.50 (.453)	5.00 (.197)	10.30 (.406)
12	55451-1210	12.75 (.502)	6.25 (.246)	11.55 (.455)
14	55451-1410	14.00 (.551)	7.50 (.295)	12.80 (.504)
16	55451-1610	15.25 (.600)	8.75 (.344)	14.05 (.553)
18	55451-1810	16.50 (.650)	10.00 (.394)	15.30 (.602)
20	55451-2010	17.75 (.699)	11.25 (.443)	16.55 (.652)
22	55451-2210	19.00 (.748)	12.50 (.492)	17.80 (.701)
24	55451-2410	20.25 (.797)	13.75 (.541)	19.05 (.750)

Circuits	Order No.	Dimension A	Dimension B	Dimension C
26	55451-2610	21.50 (.846)	15.00 (.591)	20.30 (.799)
28	55451-2810	22.75 (.896)	16.25 (.640)	21.55 (.848)
30	55451-3010	24.00 (.945)	17.50 (.689)	22.80 (.898)
32	55451-3210	25.25 (.994)	18.75 (.738)	24.05 (.947)
34	55451-3410	26.50 (1.043)	20.00 (.787)	25.30 (.996)
36	55451-3610	27.75 (1.093)	21.25 (.837)	26.55 (1.045)
38	55451-3810	29.00 (1.142)	22.50 (.886)	27.80 (1.094)
40	55451-4010	30.25 (1.191)	23.75 (.935)	29.05 (1.144)

1.25mm (.049") Pitch Wire-to-Board Crimp Terminal

50516

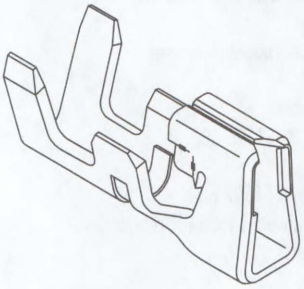

FEATURES AND SPECIFICATIONS

Features and Benefits

- Locking tang provides terminal retention to housing

Reference Information

Packaging: Reel
Use With: 51127
Designed In: Millimeters

Electrical

Voltage: 125V
Current: 1.0A
32 AWG—0.8A

Physical

Contact: Phosphor Bronze
Plating: Gold over Nickel
Wire Range: 28 to 32 AWG
Insulation Diameter: 0.5 to 1.0mm dia. max.
Strip Length: 1.20 to 1.70mm max.

CATALOG DRAWING (FOR REFERENCE ONLY)

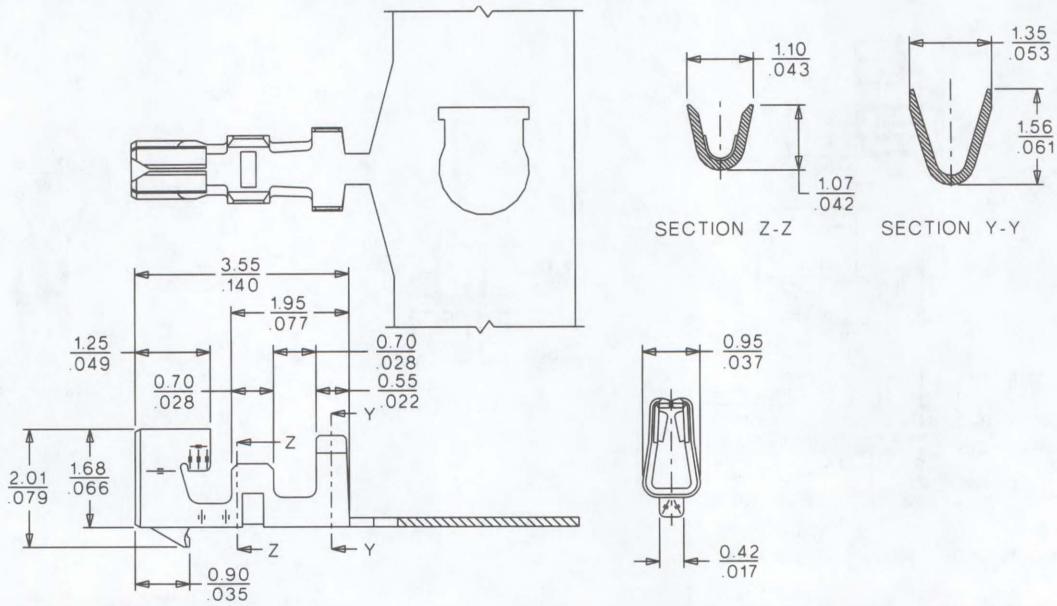

ORDERING INFORMATION

Order No.	Terminal
50516-8041	Reel

1.25mm (.049") Pitch Wire-to-Board Housing

51127

Dual Row

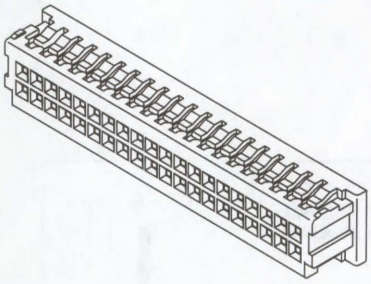

FEATURES AND SPECIFICATIONS

Features and Benefits

- Sizes: 20, 30 and 40 circuits
- Housing lance provides extra terminal retention

Reference Information

Packaging: Bag
Use With: 50516
Mates With: 53505
Designed In: Millimeters

Electrical

Voltage: 125V
Current: 1.0A
Contact Resistance: 20mΩ max.
Dielectric Withstanding Voltage: 250V AC
Insulation Resistance: 100 MΩ min.

Physical

Housing: PBTP, UL 94V-0
Operating Temperature: -40 to +85°C

CATALOG DRAWING (FOR REFERENCE ONLY)

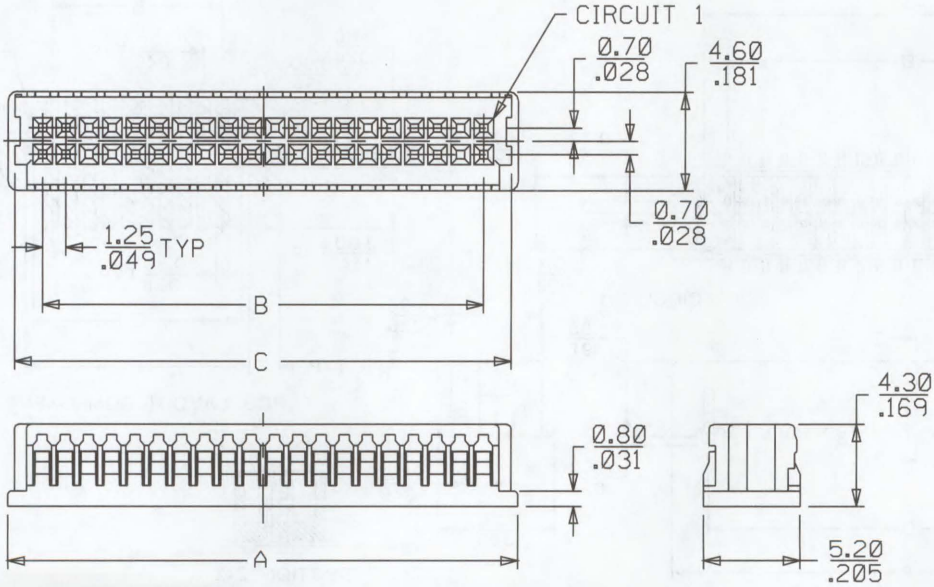

ORDERING INFORMATION AND DIMENSIONS

Circuits	Order No.	Dimension		
		A	B	C
20	51127-2005	14.95 (.588)	11.25 (.442)	14.25 (.561)
30	51127-3005	21.20 (.834)	17.50 (.688)	20.50 (.807)
40	51127-4005	27.45 (1.080)	23.75 (.935)	26.75 (1.053)

1.25mm (.049") Pitch Wire-to-Board Header

53505

Dual Row Vertical, SMT

FEATURES AND SPECIFICATIONS

Features and Benefits

- Sizes: 20, 30 and 40 circuits
- Mated height only 5.9mm

Reference Information

Packaging: Embossed tape
Mates With: 51127
Designed In: Millimeters

Electrical

Voltage: 125V
Current: 1.0A
Contact Resistance: 20mΩ max.
Dielectric Withstanding Voltage: 250V AC
Insulation Resistance: 100MΩ min.

Physical

Housing: Glass -filled PPA, UL 94V-0
Contact: Phosphor Bronze
Contact Plating: Gold over Nickel
Solder Tail Plating: Tin/Lead over Nickel
Solder Tabs: Phosphor Bronze, Tin/Lead over Copper plating
Operating Temperature: -40 to +85˚C

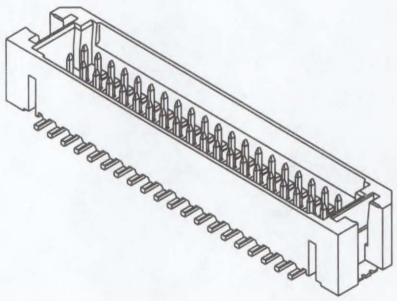

Mating Dimensions
53505 • 51127 • 50516
H=5.9mm W=6.0mm

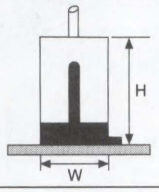

CATALOG DRAWING (FOR REFERENCE ONLY)

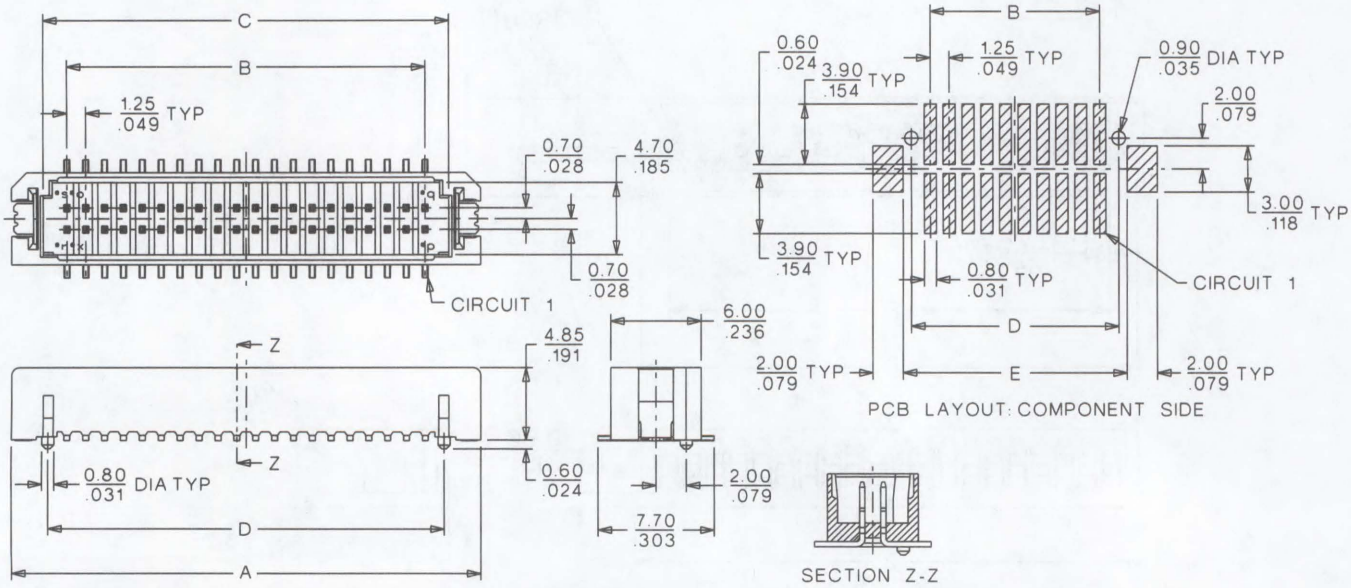

ORDERING INFORMATION AND DIMENSIONS

Circuits	Order No.	Dimension					Carrier Tape Width
		A	B	C	D	E	
20	53505-2090	18.60 (.732)	11.25 (.442)	14.40 (.566)	13.75 (.541)	14.85 (.584)	32.0 (1.259)
30	53505-3090	24.85 (.978)	17.50 (.688)	20.65 (.812)	20.00 (.787)	21.10 (.830)	44.0 (1.732)
40	53505-4090	31.10 (1.224)	23.75 (.935)	26.90 (1.059)	26.25 (1.033)	27.35 (1.076)	44.0 (1.732)

Note: Contact Molex for for embossed tape specifications

1.25mm (.049") Pitch Wire-to-Board and Wire-to-Wire Crimp Terminal

50079/50058

Female

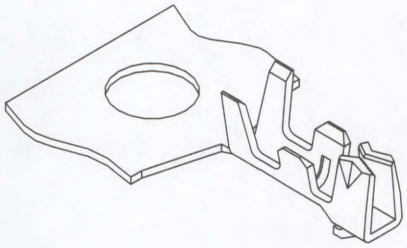

FEATURES AND SPECIFICATIONS

Features and Benefits

- Locking tang for secure housing retention

Reference Information

Packaging: Reel or bag
Use With: 51021
Mates With: 51025 and 50133
Designed In: Millimeters

Electrical

Voltage: 125V
Current: 1.0A
  32 AWG—0.8A
Contact Resistance: 20mΩ max.
Dielectric Withstanding Voltage: 250V AC/1 min.
Insulation Resistance: 100 MΩ min.

Physical

Contact: Phosphor Bronze
Plating: Tin
Wire Range:
  26 to 28 AWG—50079
  28 to 32 AWG—50058
Insulation Range: 1.00mm dia. max.
Strip Length: 1.40 to 1.90mm

CATALOG DRAWING (FOR REFERENCE ONLY)

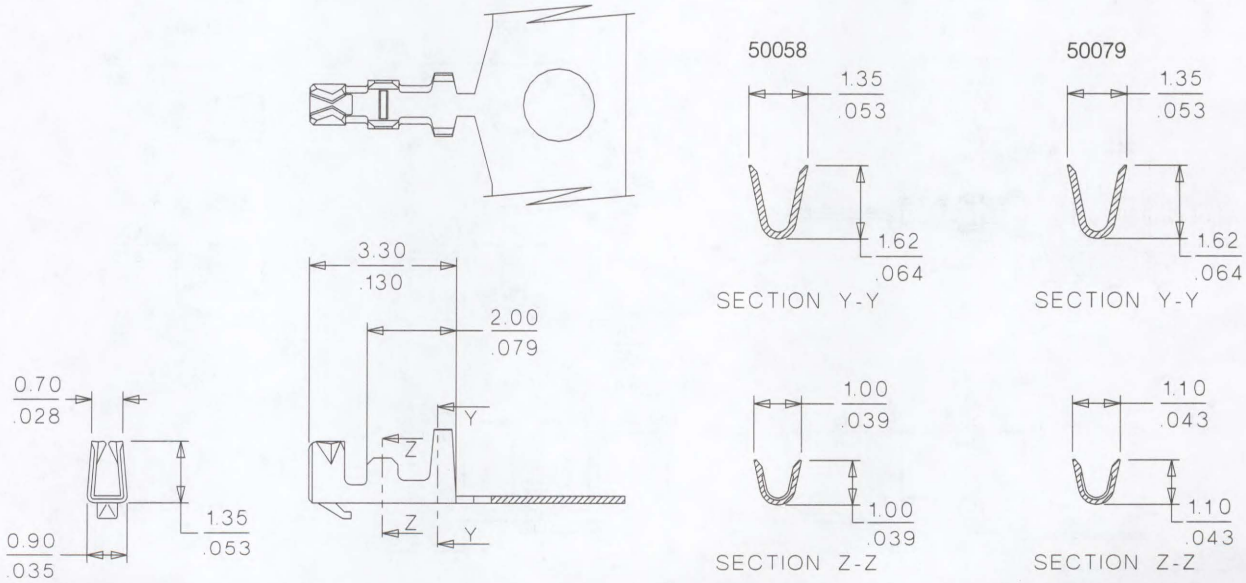

ORDERING INFORMATION

Order No.	Wire Range AWG	Terminal
50079-8000	26 - 28	Reel
50058-8000	28 - 32	
50079-8100	26 - 28	Bag
50058-8100	28 - 32	

1.25mm (.049") Pitch Wire-To-Wire Crimp Terminal

50125/50133

Male

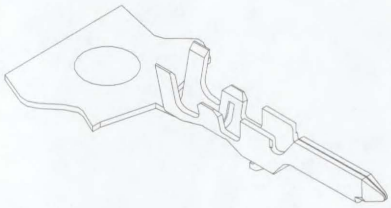

FEATURES AND SPECIFICATIONS

Features and Benefits

- Locking tang for secure housing retention

Reference Information

Packaging: Reel or bag
Use With: 51047
Mates With: 50079 and 50058
Designed In: Millimeters

Electrical

Voltage: 125V
Current: 1.0A
AWG 32—0.8A
Contact Resistance: 20mΩ max.
Dielectric Withstanding Voltage: 250V AC/1 min.
Insulation Resistance: 100 MΩ min.

Physical

Contact: Phosphor Bronze
Plating: Tin
Wire range: 26 to 28 AWG—50125
28 to 32 AWG—50133
Insulation Diameter: 1.0mm dia. max.
Strip Length: 1.4 to 1.9mm

CATALOG DRAWING (FOR REFERENCE ONLY)

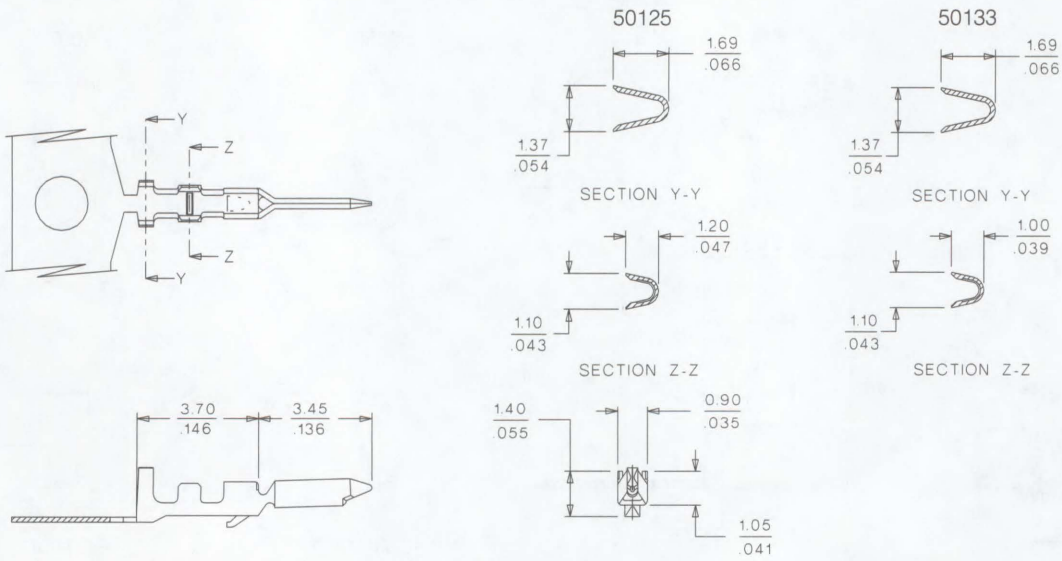

ORDERING INFORMATION

Order No.	Wire Range AWG	Terminal
50125-8000	26 to 28	Reel
50133-8000	28 to 32	
50125-8100	26 to 28	Bag
50133-8100	28 to 32	

1.25mm (.049") Pitch Wire-to-Wire Plug

51047

FEATURES AND SPECIFICATIONS

Features and Benefits
- Sizes 2 to 10 circuits

Reference Information
Packaging: Bag
Use With: 50125/50133
Mates With: 51021
Designed In: Millimeters

Electrical
Voltage: 125V
Current: 1.0A
32 AWG—0.8A
Contact Resistance: 20mΩ max.
Dielectric Withstanding Voltage: 250V AC/1 min.
Insulation Resistance: 100 MΩ min.

Physical
Housing: PBTP, UL 94V-0
Operating Temperature: -40 to +85°C

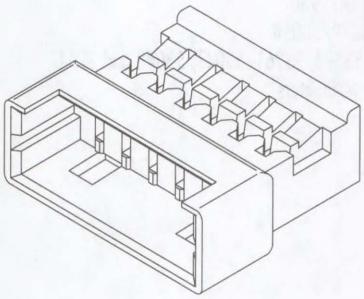

Mating Dimensions
51047 • 50125/50133
51021 • 50079/50058
W=9.0mm

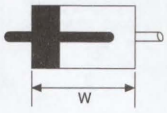

CATALOG DRAWING (FOR REFERENCE ONLY)

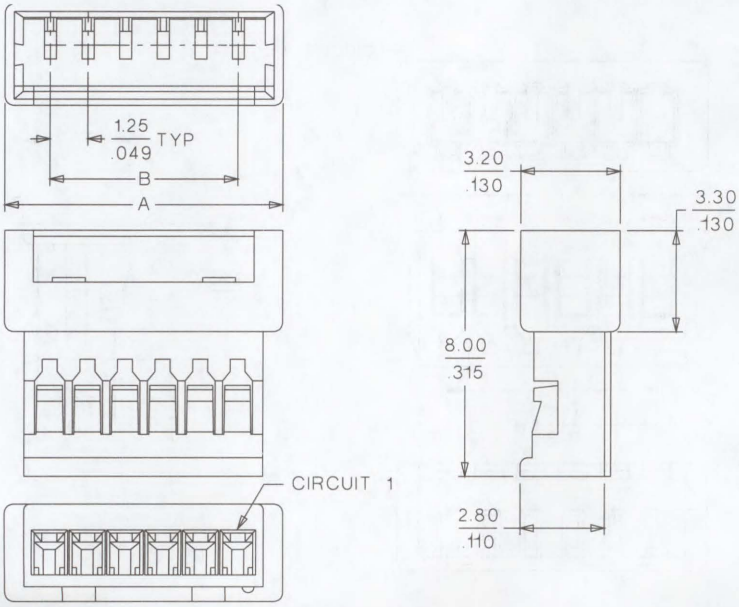

ORDERING INFORMATION AND DIMENSIONS

Circuits	Order No.	Dimension	
		A	B
2	51047-0200	4.25 (.167)	1.25 (.049)
3	51047-0300	5.50 (.217)	2.50 (.098)
4	51047-0400	6.75 (.268)	3.75 (.147)
5	51047-0500	8.00 (.315)	5.00 (.196)
6	51047-0600	9.25 (.364)	6.25 (.246)
7	51047-0700	10.50 (.413)	7.50 (.295)
8	51047-0800	11.75 (.463)	8.75 (.344)
9	51047-0900	13.00 (.512)	10.00 (.393)
10	51047-1000	14.25 (.561)	11.25 (.442)

1.25mm (.049") Pitch Wire-to-Wire and Wire-to-Board Receptacle

51021

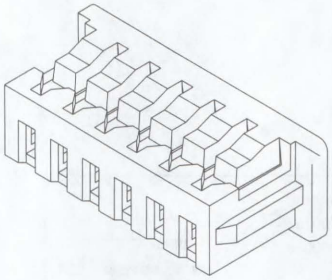

FEATURES AND SPECIFICATIONS

Features and Benefits
- Sizes 2 to 15 circuits
- Housing lance provides extra terminal retention
- Friction locks provide secure mating

Reference Information
Packaging: Bag
UL File No.: E29179
CSA File No.: LR19980
Use With: 50079/50058
Mates With: 53398, 53261, 53047, 53048 and 51047
Designed In: Millimeters

Electrical
Voltage: 125V
Current: 1.0A
32 AWG—0.8A
Contact Resistance: 20mΩ max.
Dielectric Withstanding Voltage: 250V AC/1 min.
Insulation Resistance: 100 MΩ min.

Physical
Housing: PBTP, UL 94V-0
Operating Temperature: -40 to +85°C

CATALOG DRAWING (FOR REFERENCE ONLY)

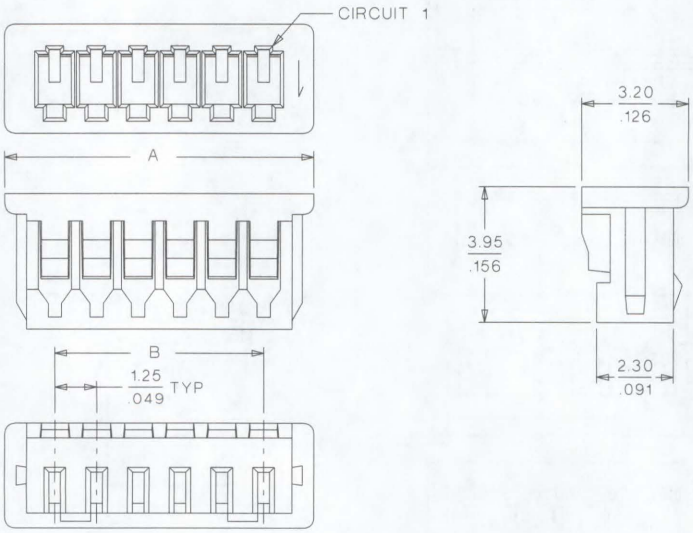

ORDERING INFORMATION AND DIMENSIONS

Circuits	Order No.	Dimension	
		A	B
2	51021-0200	4.25 (.167)	1.25 (.049)
3	51021-0300	5.50 (.217)	2.50 (.098)
4	51021-0400	6.75 (.266)	3.75 (.148)
5	51021-0500	8.00 (.315)	5.00 (.197)
6	51021-0600	9.25 (.364)	6.25 (.246)
7	51021-0700	10.50 (.413)	7.50 (.295)
8	51021-0800	11.75 (.463)	8.75 (.344)
9	51021-0900	13.00 (.512)	10.00 (.393)
10	51021-1000	14.25 (.561)	11.25 (.441)
11	51021-1100	15.50 (.610)	12.50 (.492)
12	51021-1200	16.75 (.659)	13.75 (.541)
13	51021-1300	18.00 (.709)	15.00 (.590)
14	51021-1400	19.25 (.758)	16.25 (.639)
15	51021-1500	20.50 (.807)	17.50 (.688)

1.25mm (.049") Pitch Wire-to-Board Header

53261

Right Angle, SMT

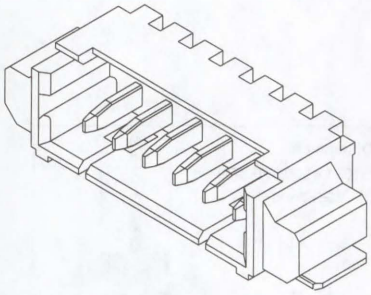

FEATURES AND SPECIFICATIONS

Features and Benefits

- Sizes 2 to 15 circuits
- Locking windows provide secure mating
- Metal solder tabs provide PCB hold-down and strain relief for SMT tails

Reference Information

Packaging: Embossed tape
UL File No.: E29179
CSA File No.: LR19980
Mates With: 51021
Designed In: Millimeters

Mating Dimensions
53261 • 51021 • 50058/50079
H=3.4mm W=5.2mm

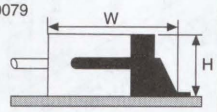

Electrical

Voltage: 125V
Current: 1.0A
32 AWG—0.8A
Contact Resistance: 20mΩ max.
Dielectric Withstanding Voltage: 250V AC/1 min.
Insulation Resistance: 100 MΩ min.

Physical

Housing: 4/6 nylon, UL 94V-0
Contact: Phosphor Bronze
Plating: Tin/Lead
Solder Tabs: Phosphor Bronze, Tin/Lead plating
Operating Temperature: -40 to +85˚C

CATALOG DRAWING (FOR REFERENCE ONLY)

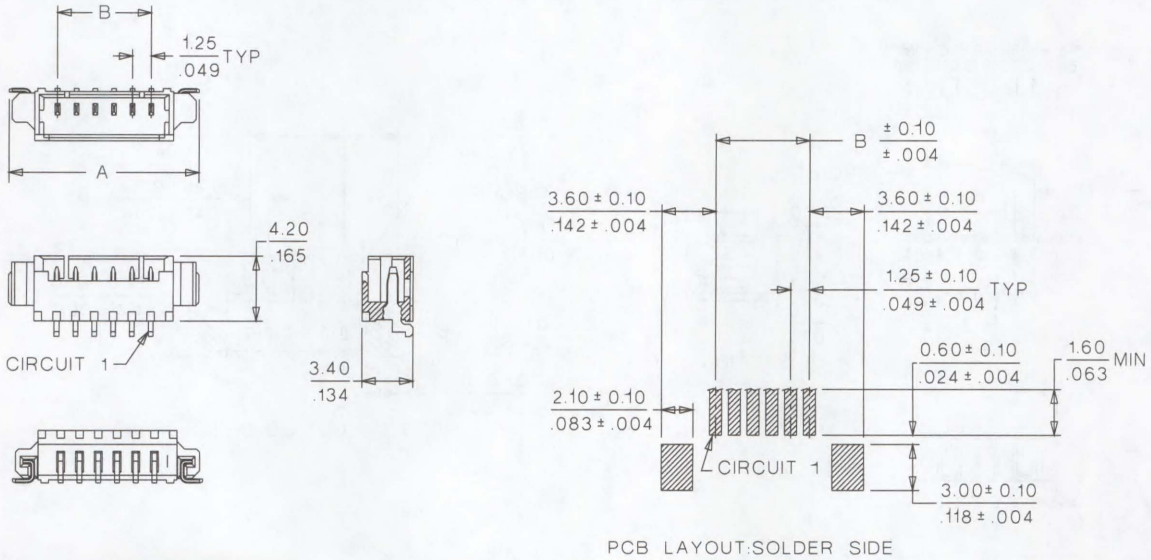

ORDERING INFORMATION AND DIMENSIONS

Circuits	Order No.	Dimension A	Dimension B	Tape Width
2	53261-0290	7.65 (.301)	1.25 (.049)	16.00 (.630)
3	53261-0390	8.90 (.350)	2.50 (.098)	
4	53261-0490	10.15 (.400)	3.75 (.148)	24.00 (.945)
5	53261-0590	11.40 (.449)	5.00 (.197)	
6	53261-0690	12.65 (.498)	6.25 (.246)	
7	53261-0790	13.90 (.547)	7.50 (.295)	
8	53261-0890	15.15 (.596)	8.75 (.344)	
9	53261-0990	16.40 (.646)	10.00 (.394)	
10	53261-1090	17.65 (.695)	11.25 (.443)	
11	53261-1190	18.90 (.744)	12.50 (.492)	32.00 (1.260)
12	53261-1290	20.15 (.793)	13.75 (.541)	
14	53261-1490	22.65 (.892)	16.25 (.640)	44.00 (1.732)
15	53261-1590	23.90 (.941)	17.50 (.689)	

1.25mm (.049") Pitch Wire-to-Board Header

53398

Vertical, SMT

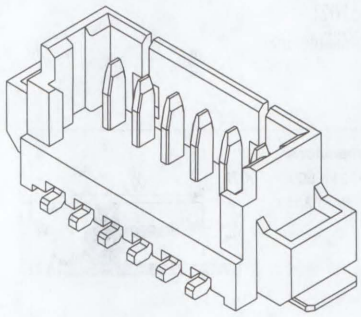

FEATURES AND SPECIFICATIONS

Features and Benefits

- Sizes 2 to 15 circuits
- Locking windows provide secure mating
- Metal solder tabs provide PCB hold-down and strain relief for SMT tails

Reference Information

Packaging: Embossed tape
Mates With: 51021
Designed In: Millimeters

Electrical

Voltage: 125V
Current: 1.0A
32 AWG—0.8A
Contact Resistance: 20mΩ max.
Dielectric Withstanding Voltage: 250V AC/1 min.
Insulation Resistance: 100 MΩ min.

Physical

Housing: Glass-filled 4/6 nylon, UL 94V-0
Contact: Phosphor Bronze
Plating: Tin/Lead
Solder Tabs: Phosphor Bronze, Tin/Lead plating
Operating Temperature: -40 to +85°C

Mating Dimensions
53398 • 51021 • 50058/50079
H=5.7mm W=3.7mm

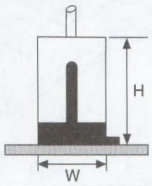

CATALOG DRAWING (FOR REFERENCE ONLY)

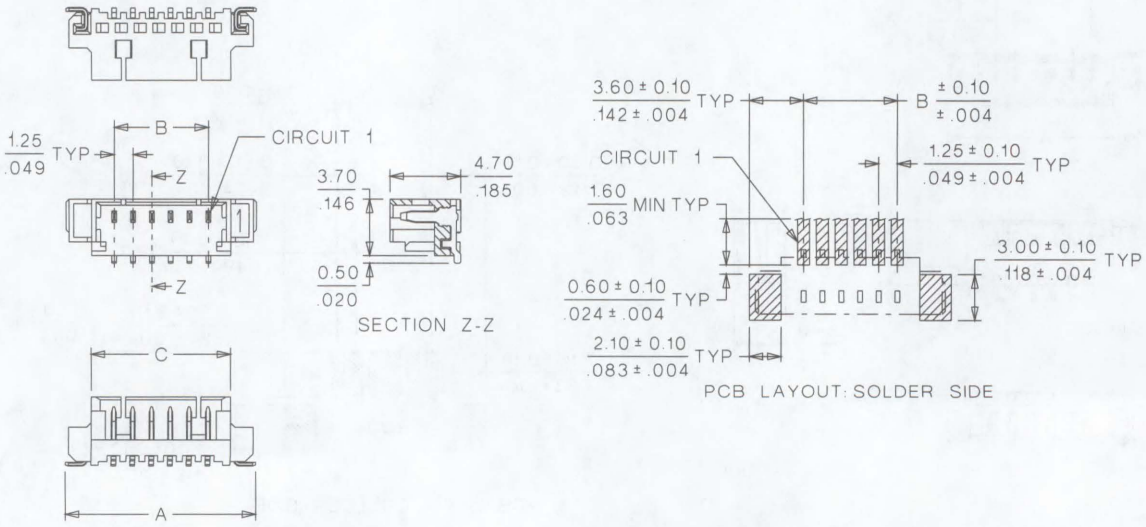

ORDERING INFORMATION AND DIMENSIONS

Circuits	Order No.	Dimension			Tape Width
		A	B	C	
2	53398-0290	7.65 (.301)	1.25 (.049)	4.25 (.167)	16.00 (.630)
3	53398-0390	8.90 (.350)	2.50 (.098)	5.50 (.216)	
4	53398-0490	10.15 (.399)	3.75 (.147)	6.75 (.265)	24.00 (.945)
5	53398-0590	11.40 (.448)	5.00 (.196)	8.00 (.314)	
6	53398-0690	12.65 (.498)	6.25 (.246)	9.25 (.364)	
7	53398-0790	13.90 (.547)	7.50 (.295)	10.50 (.413)	
8	53398-0890	15.15 (.596)	8.75 (.344)	11.75 (.462)	
9	53398-0990	16.40 (.645)	10.00 (.393)	13.00 (.511)	
10	53398-1090	17.65 (.694)	11.25 (.442)	14.25 (.561)	
11	53398-1190	18.90 (.744)	12.50 (.492)	15.50 (.610)	32.00 (1.260)
12	53398-1290	20.15 (.793)	13.75 (.541)	16.75 (.659)	
13	53398-1390	21.40 (.842)	15.00 (.590)	18.00 (.708)	
14	53398-1490	22.65 (.891)	16.25 (.639)	19.25 (.757)	44.00 (1.732)
15	53398-1590	23.90 (.940)	17.50 (.688)	20.50 (.807)	

FEATURES AND SPECIFICATIONS

1.25mm (.049") Pitch Wire-to-Board Header

53048

Right Angle

Features and Benefits

- Sizes 2 to 15 circuits
- Locking windows provide secure mating

Reference Information

Packaging: Tray
Mates With: 51021
Designed In: Millimeters

Electrical

Voltage: 125V
Current: 1.0A
32 AWG—0.8A
Contact Resistance: 20mΩ max.
Dielectric Withstanding Voltage: 250V AC/1 min.
Insulation Resistance: 100 MΩ min.

Physical

Housing: 6/6 nylon, UL 94V-0
Contact: Phosphor Bronze
Plating: Tin
Operating Temperature: -40 to +85°C

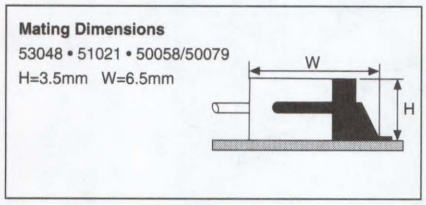

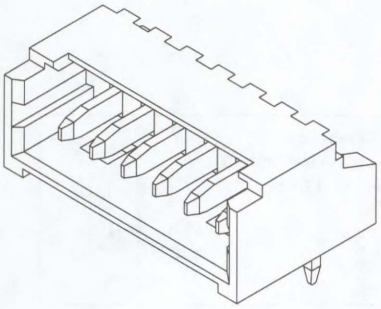

CATALOG DRAWING (FOR REFERENCE ONLY)

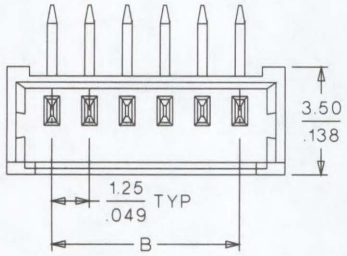

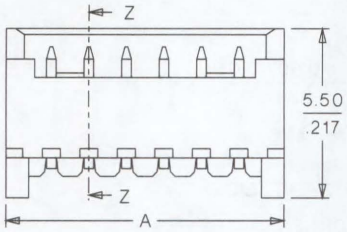

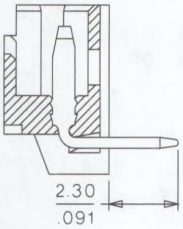

SECTION Z-Z

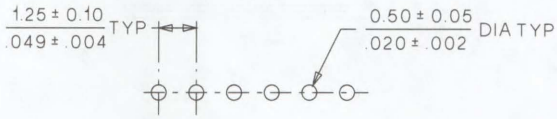

PCB LAYOUT: COMPONENT SIDE
RECOMMENDED PCB THICKNESS: 0.80 ± 0.10 / .031 ± .004

ORDERING INFORMATION AND DIMENSIONS

Circuits	Order No.	Dimension	
		A	B
2	53048-0210	4.25 (.167)	1.25 (.049)
3	53048-0310	5.50 (.217)	2.50 (.098)
4	53048-0410	6.75 (.266)	3.75 (.147)
5	53048-0510	8.00 (.315)	5.00 (.196)
6	53048-0610	9.25 (.364)	6.25 (.246)
7	53048-0710	10.50 (.413)	7.50 (.295)
8	53048-0810	11.75 (.463)	8.75 (.344)
9	53048-0910	13.00 (.512)	10.00 (.393)
10	53048-1010	14.25 (.561)	11.25 (.442)
11	53048-1110	15.50 (.610)	12.50 (.492)
12	53048-1210	16.75 (.659)	13.75 (.541)
13	53048-1310	18.00 (.709)	15.00 (.590)
14	53048-1410	19.25 (.758)	16.25 (.639)
15	53048-1510	20.50 (.807)	17.50 (.688)

1.25mm (.049") Pitch Wire-to-Board Header

53047

Vertical

FEATURES AND SPECIFICATIONS

Features and Benefits

- Sizes 2 to 15 circuits
- Locking windows provide secure mating

Reference Information

Packaging: Tray
Mates With: 51021
Designed In: Millimeters

Electrical

Voltage: 125V
Current: 1.0A
32 AWG—0.8A
Contact Resistance: 20mΩ max.
Dielectric Withstanding Voltage: 250V AC/1 min.
Insulation Resistance: 100 MΩ min.

Physical

Housing: 6/6 nylon, UL 94V-0
Contact: Phosphor Bronze
Plating: Tin
Operating Temperature: -40 to +85°C

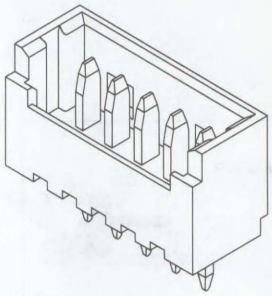

Mating Dimensions
53047 • 51021 • 50058/50079
H=5.2mm W=3.2mm

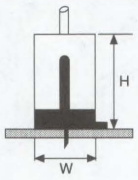

CATALOG DRAWING (FOR REFERENCE ONLY)

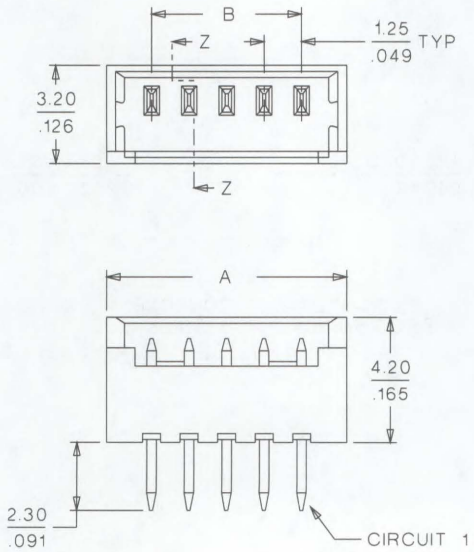

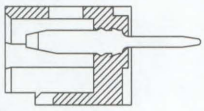

SECTION Z-Z

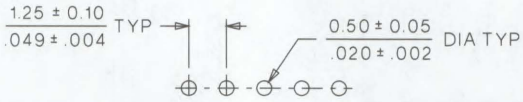

PCB LAYOUT: COMPONENT SIDE

RECOMMENDED PCB THICKNESS : 0.8± 0.10 / .031± 0.04

ORDERING INFORMATION AND DIMENSIONS

Circuits	Order No.	Dimension	
		A	B
2	53047-0210	4.25 (.167)	1.25 (.049)
3	53047-0310	5.50 (.217)	2.50 (.098)
4	53047-0410	6.75 (.266)	3.75 (.147)
5	53047-0510	8.00 (.315)	5.00 (.196)
6	53047-0610	9.25 (.364)	6.25 (.246)
7	53047-0710	10.50 (.413)	7.50 (.295)
8	53047-0810	11.75 (.463)	8.75 (.344)
9	53047-0910	13.00 (.512)	10.00 (.393)
10	53047-1010	14.25 (.561)	11.25 (.442)
11	53047-1110	15.50 (.610)	12.50 (.492)
12	53047-1210	16.75 (.659)	13.75 (.541)
13	53047-1310	18.00 (.709)	15.00 (.590)
14	53047-1410	19.25 (.758)	16.25 (.639)
15	53047-1510	20.50 (.807)	17.50 (.688)

1.25mm (.049") Pitch Board-In Connector Crimp Terminal

50061/50080

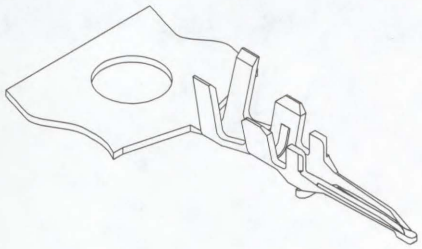

FEATURES AND SPECIFICATIONS

Features and Benefits

- Locking tang secures terminal to housing

Reference Information

Packaging: Bag or reel
Use With: 51022
Designed In: Millimeters

Electrical

Voltage: 125V
Current: 1.0A (0.8A for 32 AWG)
Contact Resistance on Crimped Portion: 5mΩ max.
Dielectric Withstanding Voltage: 250V AC/1 min.
Insulation Resistance: 100 MΩ min.

Physical

Contact: Phosphor Bronze
Plating: Tin
Wire Range: 50061 (28 to 32 AWG)
50080 (26 to 28 AWG)
Insulation Range: 1.00mm dia. max.
Strip Length: 1.40 to 1.90mm

CATALOG DRAWING (FOR REFERENCE ONLY)

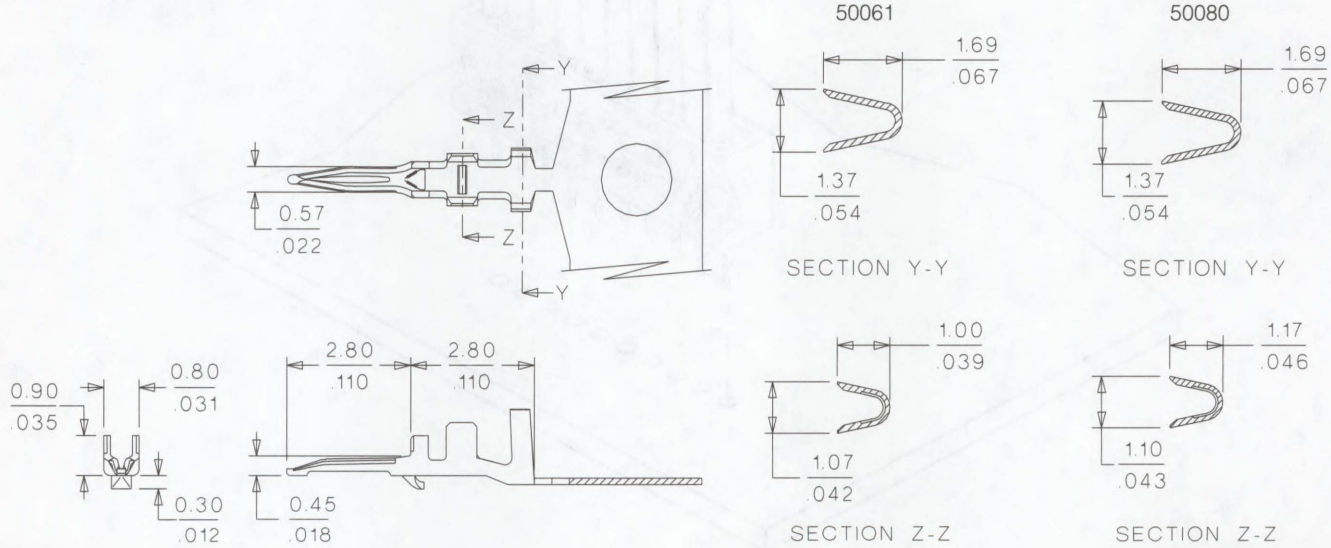

ORDERING INFORMATION

Order No.	Wire Range AWG	Terminal
50061-8000	28 to 32	Reel
50080-8000	26 to 28	
50061-8100	28 to 32	Bag
50080-8100	26 to 28	

Molex's broad selection of "board-in" connectors provide a simple direct solder solution for a variety of wire-to-board applications. This one-piece system is available in a variety of pitch sizes and wire gauges to accommodate varying application needs.

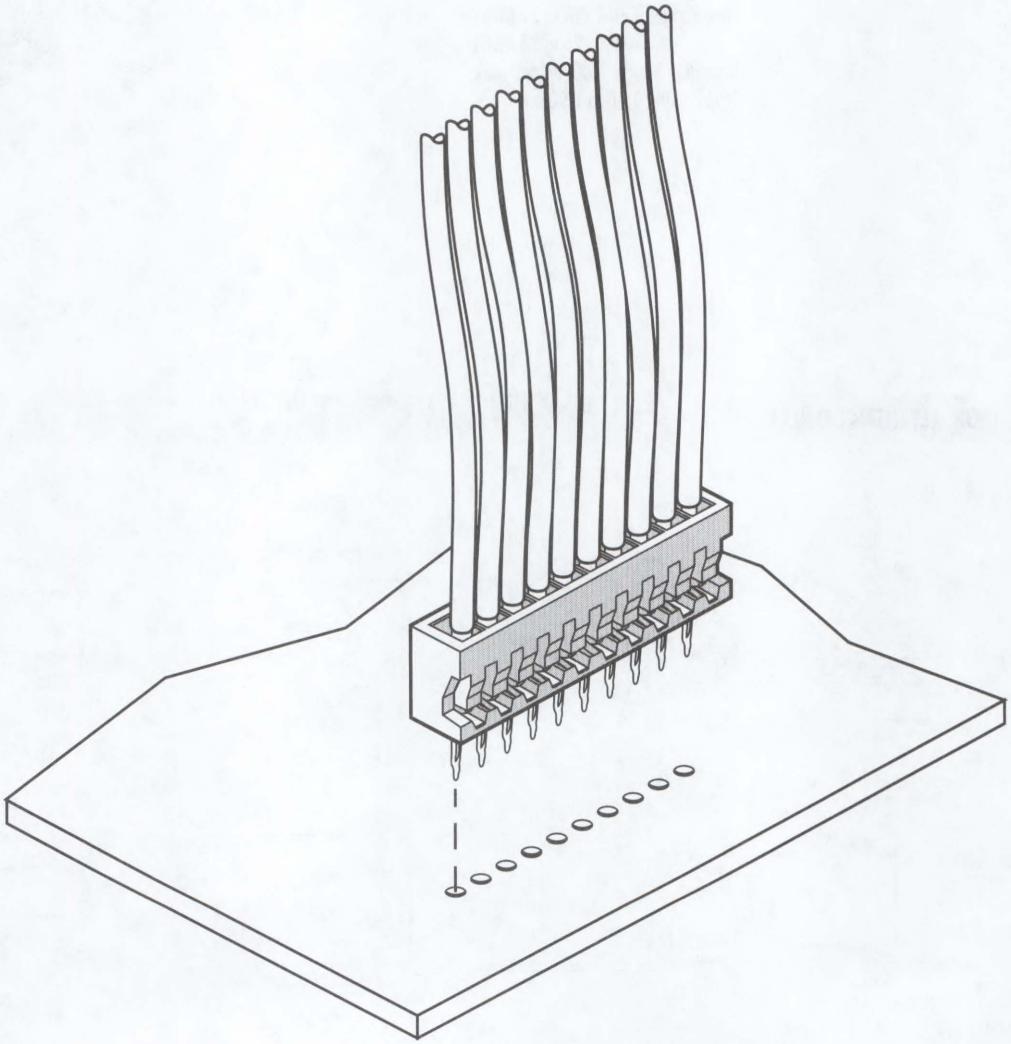

Pitch	Part No.	Type	Description
1.25 (.049)	50061/50080	Terminal	Vertical
1.25 (.049)	51022	Housing	Vertical
2.00 (.079)	50034	Terminal	Vertical
2.00 (.079)	51015	Housing	Vertical
2.00 (.079)	5378	Terminal	Vertical
2.00 (.079)	5379	Housing	Vertical
2.00/2.50 (.079/.098)	35021	Terminal	Right Angle
2.00 (.079)	35023	Housing	Right Angle
2.50 (.098)	35022	Housing	Right Angle

1.50mm (.059") Pitch Wire-to-Board Crimp Terminal

87421

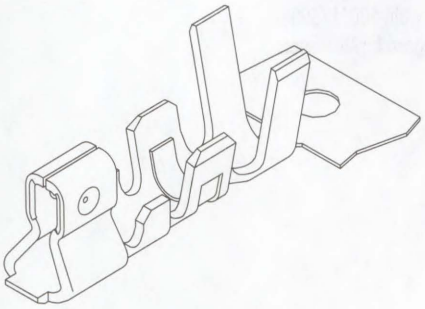

FEATURES AND SPECIFICATIONS

Features and Benefits

- Low profile
- Locking tang snaps into housing window for secure retention
- Dual-point contact design
- Anti-fishhooking box design protects contact area

Reference Information

Product Specification: PS-87437
Packaging: Reel
Wire Style: UL1061
UL File No.: E29179
CSA File No.: LR19980A
Use With: 87439 housing
Designed In: Millimeters

Electrical

Voltage: 30V
Current:

AWG	24	26	28
AMP	2	2	1.5

Contact Resistance: 40mΩ max.
Dielectric Withstanding Voltage: 500V AC
Insulation Resistance: 1000 MΩ min.

Physical

Contact: Phosphor Bronze
Plating: Tin
Wire Range: 24, 26, 28 AWG
Operating Temperature: -25 to +85°C
Insulation Diameter: 1.10mm dia. max.

CATALOG DRAWING (FOR REFERENCE ONLY)

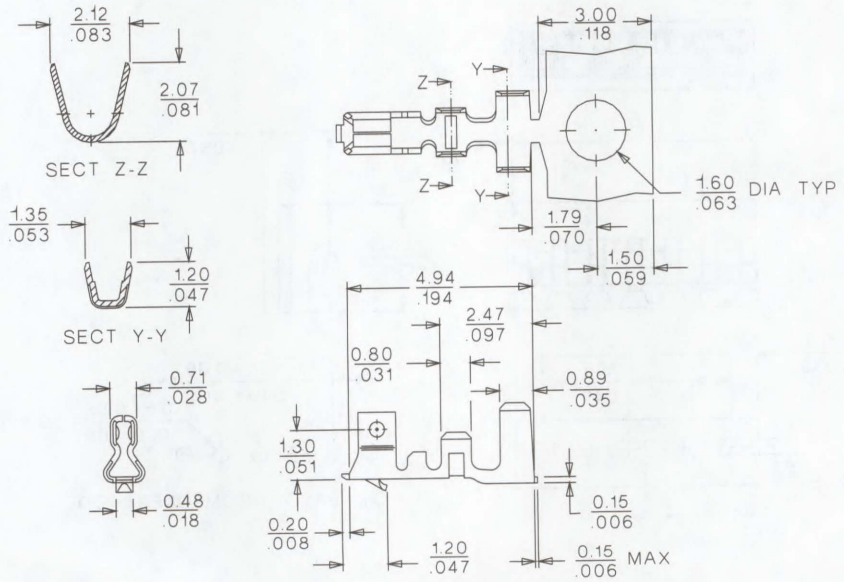

ORDERING INFORMATION

Order No.	Packaging
87421-0000	Reel

1.25mm (.049") Pitch Board-In Connector Housing

51022

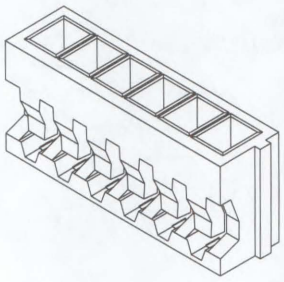

FEATURES AND SPECIFICATIONS

Features and Benefits
- Sizes 2 to 15 circuits
- Low profile of 3.5mm
- Locking window secures terminal to housing

Reference Information
Packaging: Bag
Use With: 50061/50080
Designed In: Millimeters

Physical
Housing: PBTP, UL 94V-0
Operating Temperature: -40 to +85°C

CATALOG DRAWING (FOR REFERENCE ONLY)

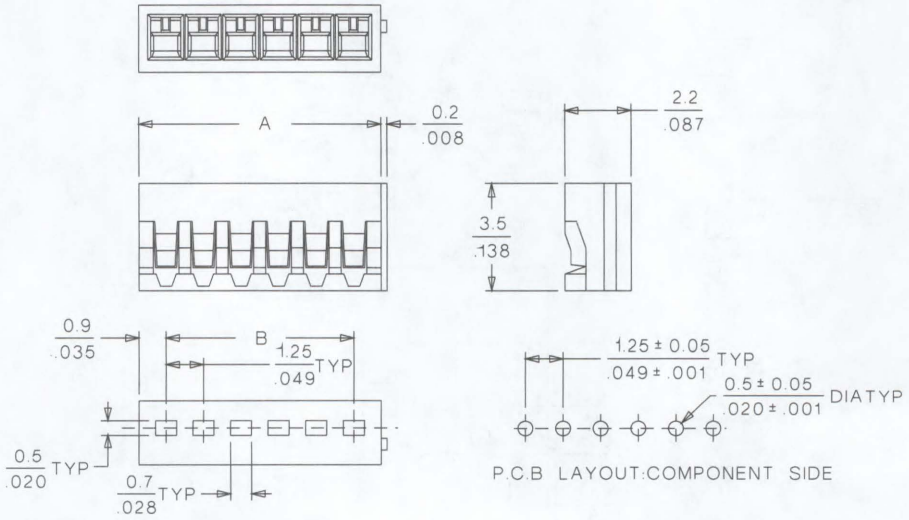

ORDERING INFORMATION AND DIMENSIONS

Circuits	Order No.	Dimension	
		A	B
2	51022-0200	3.05 (.120)	1.25 (.049)
3	51022-0300	4.30 (.169)	2.50 (.098)
4	51022-0400	5.55 (.219)	3.75 (.147)
5	51022-0500	6.80 (.268)	5.00 (.196)
6	51022-0600	8.05 (.317)	6.25 (.246)
7	51022-0700	9.30 (.366)	7.50 (.295)
8	51022-0800	10.55 (.415)	8.75 (.344)
9	51022-0900	11.80 (.465)	10.00 (.393)
10	51022-1000	13.05 (.514)	11.25 (.442)
11	51022-1100	14.30 (.563)	12.50 (.492)
12	51022-1200	15.55 (.612)	13.75 (.541)
13	51022-1300	16.80 (.661)	15.00 (.590)
14	51022-1400	18.05 (.711)	16.25 (.639)
15	51022-1500	19.30 (.760)	17.50 (.688)

1.50mm (.059") Pitch Wire-to-Board Header

87437

Vertical, SMT Shrouded

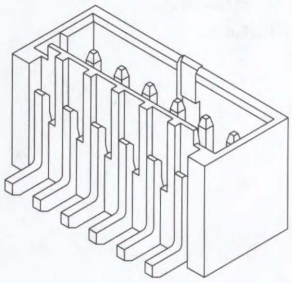

FEATURES AND SPECIFICATIONS

Features and Benefits

- Sizes 2 to 15 circuits
- Compact, low-profile SMT design
- Fully shrouded to protect pins during mating/unmating
- Center keyway for secure connection to housing
- One-piece mating post and SMT tail provides coplanarity control and large soldering area
- High-temperature material withstands reflow soldering

Reference Information

Product Specification: PS-87437
Packaging: Tube or tape and reel
UL File No.: E29179
CSA File No.: LR19980A
Mates With: 87439
Designed In: Millimeters

Mating Dimensions
87437 • 87439
H=7mm W=4.45mm

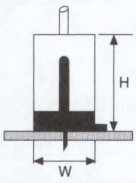

Electrical

Voltage: 250V
Current: 2.0A
Contact Resistance: 40mΩ max.
Dielectric Withstanding Voltage: 500V AC
Insulation Resistance: 1000 MΩ min.

Mechanical

Contact Retention to Housing: 1kgf max.
Durability: 10 cycles

Physical

Housing: Beige glass-filled 4/6 nylon, UL 94V-0
Contact: Brass Alloy
Plating: 2.54μm Tin/Lead
Operating Temperature: -25 to + 85°C

CATALOG DRAWING (FOR REFERENCE ONLY)

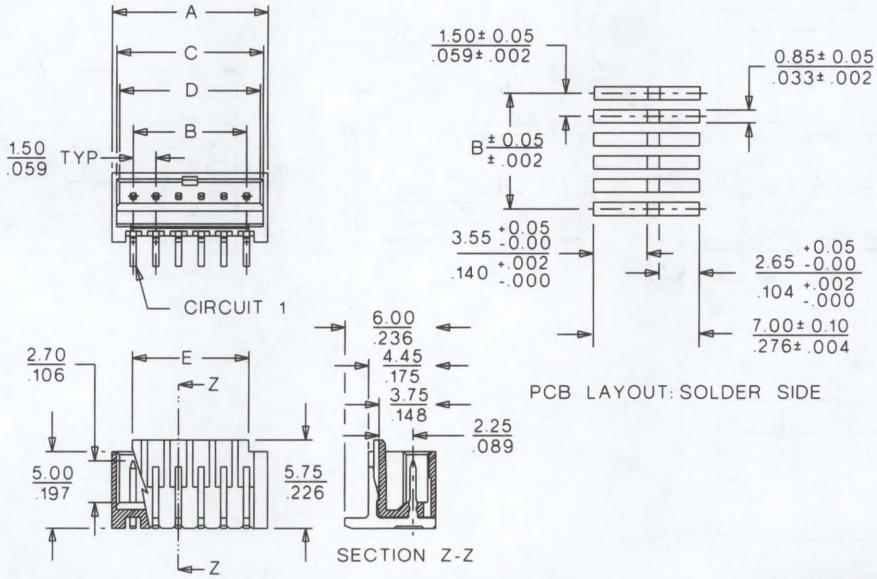

ORDERING INFORMATION AND DIMENSIONS

Circuits	Order No.		Dimension				
	Tube	Tape and Reel	A	B	C	D	E
2	87437-0232	87437-0233	4.30 (.169)	1.50 (.059)	3.70 (.145)	3.30 (.129)	1.70 (.066)
3	87437-0332	87437-0333	5.80 (.228)	3.00 (.118)	5.20 (.204)	4.80 (.188)	3.20 (.125)
4	87437-0432	87437-0433	7.30 (.287)	4.50 (.177)	6.70 (.263)	6.30 (.248)	4.70 (.185)
5	87437-0532	87437-0533	8.80 (.346)	6.00 (.236)	8.20 (.322)	7.80 (.307)	6.20 (.244)
6	87437-0632	87437-0633	10.30 (.405)	7.50 (.295)	9.70 (.381)	9.30 (.366)	7.70 (.303)
7	87437-0732	87437-0733	11.80 (.464)	9.00 (.354)	11.20 (.440)	10.80 (.425)	9.20 (.362)
8	87437-0832	87437-0833	13.30 (.523)	10.50 (.413)	12.70 (.499)	12.30 (.484)	10.70 (.421)
9	87437-0932	87437-0933	14.80 (.582)	12.00 (.472)	14.20 (.559)	13.80 (.543)	12.20 (.480)
10	87437-1032	87437-1033	16.30 (.641)	13.50 (.531)	15.70 (.618)	15.30 (.602)	13.70 (.539)
11	87437-1132	87437-1133	17.80 (.700)	15.00 (.590)	17.20 (.677)	16.80 (.661)	15.20 (.598)
12	87437-1232	87437-1233	19.30 (.759)	16.50 (.649)	18.70 (.736)	18.30 (.720)	16.70 (.657)
13	87437-1332	87437-1333	20.80 (.818)	18.00 (.708)	20.20 (.795)	19.80 (.779)	18.20 (.716)
14	87437-1432	87437-1433	22.30 (.877)	19.50 (.767)	21.70 (.854)	21.30 (.838)	19.70 (.775)
15	87437-1532	87437-1533	23.80 (.937)	21.00 (.826)	23.20 (.913)	22.80 (.897)	21.20 (.834)

1.50mm (.059") Pitch Wire-to-Board Housing

87439

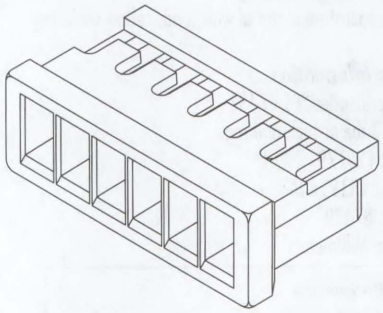

FEATURES AND SPECIFICATIONS

Features and Benefits

- Sizes 2 to 15 circuits
- Standard with center locking ramp
- Locking windows secure terminal to housing
- Lead-in chamfer facilitates mating

Physical

Housing: Glass-filled 6/6 nylon, UL 94V-0
Operating Temperature: -25 to + 85°C

Reference Information

Product Specification: PS-87437
Packaging: Bag
UL File No.: E29179
CSA File No.: LR19980A
Mates With: 87437 and 87438 headers
Use With: 87421 crimp terminal
Designed In: Millimeters

CATALOG DRAWING (FOR REFERENCE ONLY)

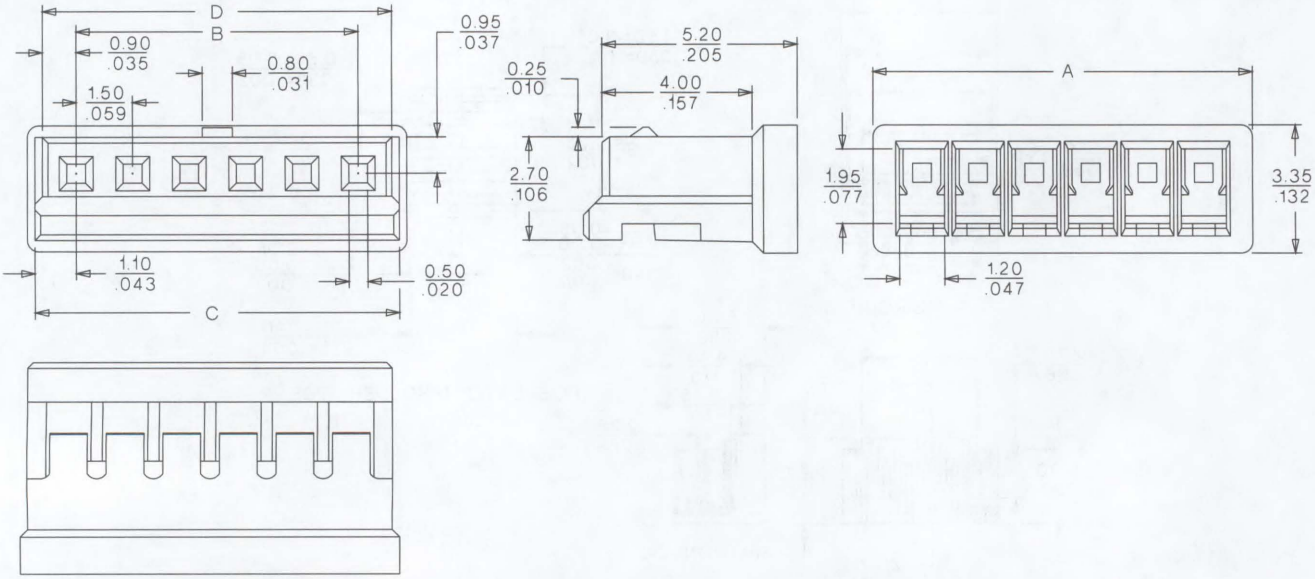

ORDERING INFORMATION AND DIMENSIONS

Circuits	Order No.	Dimension			
		A	B	C	D
2	87439-0200	4.10 (.161)	1.50 (.059)	3.70 (.145)	3.30 (.129)
3	87439-0300	5.60 (.220)	3.00 (.118)	5.20 (.204)	4.80 (.188)
4	87439-0400	7.10 (.279)	4.50 (.177)	6.70 (.263)	6.30 (.248)
5	87439-0500	8.60 (.338)	6.00 (.236)	8.20 (.322)	7.80 (.307)
6	87439-0600	10.10 (.397)	7.50 (.295)	9.70 (.381)	9.30 (.366)
7	87439-0700	11.60 (.456)	9.00 (.354)	11.20 (.440)	10.80 (.425)
8	87439-0800	13.10 (.515)	10.50 (.413)	12.70 (.499)	12.30 (.484)
9	87439-0900	14.60 (.574)	12.00 (.472)	14.20 (.559)	13.80 (.543)
10	87439-1000	16.10 (.633)	13.50 (.531)	15.70 (.618)	15.30 (.602)
11	87439-1100	17.60 (.692)	15.00 (.590)	17.20 (.677)	16.80 (.661)
12	87439-1200	19.10 (.751)	16.50 (.649)	18.70 (.736)	18.30 (.720)
13	87439-1300	20.60 (.811)	18.00 (.708)	20.20 (.795)	19.80 (.779)
14	87439-1400	22.10 (.870)	19.50 (.767)	21.70 (.854)	21.30 (.838)
15	87439-1500	23.60 (.929)	21.00 (.826)	23.20 (.913)	22.80 (.897)

molex® Application Tooling

FPC Insertion Tool

FEATURES AND SPECIFICATIONS

Features

- Easily adjustable from 6 to 30 circuits
- Tooling assures proper orientation of components for quality assembly
- Hand operated tool which requires no air or electric

Specifications

Height: 50mm (2.00")
Weight: 1kg (2.2 lb)

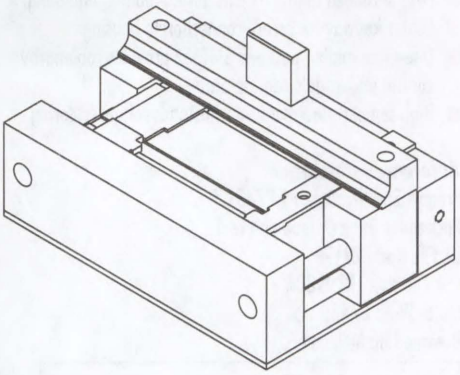

ORDERING INFORMATION

Description	Order No.	Product No.
FPC Insertion Tool	62100-0800	54281

1.50mm (.059") Pitch Wire-to-Board Header

87438

Right Angle, SMT Shrouded

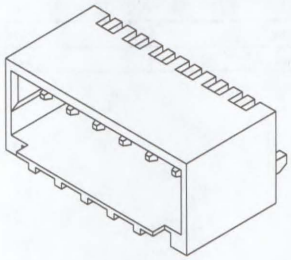

FEATURES AND SPECIFICATIONS

Features and Benefits

- Sizes 2 to 15 circuits
- Compact, low-profile SMT design
- Fully shrouded to protect pins during mating/unmating
- Center keyway for secure connection to housing
- One-piece mating post and SMT tail provides coplanarity control and large soldering area
- High-temperature material withstands reflow soldering

Reference Information

Product Specification: PS-87437
Packaging: Tube or tape and reel
UL File No.: E29179
CSA File No.: LR19980A
Mates With: 87439
Designed In: Millimeters

Mating Dimensions
87438 • 87439
H=4.45mm W=7mm

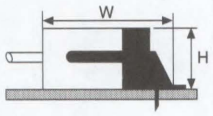

Electrical

Voltage: 250V
Current: 2.0A
Contact Resistance: 40mΩ max.
Dielectric Withstanding Voltage: 500V AC
Insulation Resistance: 1000 MΩ min.

Mechanical

Contact Retention to Housing: 1kgf max.
Durability: 10 cycles

Physical

Housing: Beige glass-filled 4/6 nylon, UL 94V-0
Contact: Brass Alloy
Plating: 2.54μm Tin/Lead
Operating Temperature: -25 to + 85°C

CATALOG DRAWING (FOR REFERENCE ONLY)

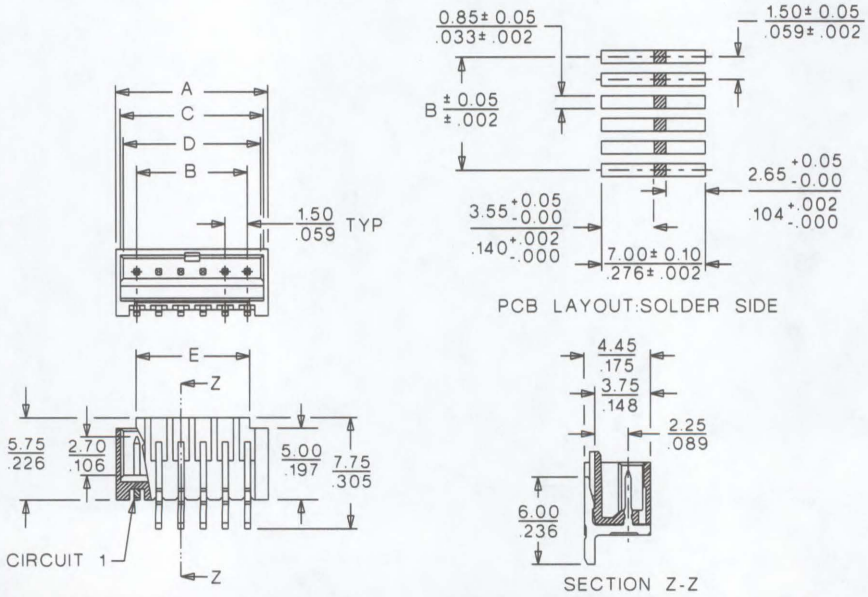

ORDERING INFORMATION AND DIMENSIONS

Circuits	Order No.		Dimension				
	Tube	Tape and Reel	A	B	C	D	E
2	87438-0232	87438-0233	4.30 (.169)	1.50 (.059)	3.70 (.145)	3.30 (.129)	1.70 (.066)
3	87438-0332	87438-0333	5.80 (.228)	3.00 (.118)	5.20 (.204)	4.80 (.188)	3.20 (.125)
4	87438-0432	87438-0433	7.30 (.287)	4.50 (.177)	6.70 (.263)	6.30 (.248)	4.70 (.185)
5	87438-0532	87438-0533	8.80 (.346)	6.00 (.236)	8.20 (.322)	7.80 (.307)	6.20 (.244)
6	87438-0632	87438-0633	10.30 (.405)	7.50 (.295)	9.70 (.381)	9.30 (.366)	7.70 (.303)
7	87438-0732	87438-0733	11.80 (.464)	9.00 (.354)	11.20 (.440)	10.80 (.425)	9.20 (.362)
8	87438-0832	87438-0833	13.30 (.523)	10.50 (.413)	12.70 (.499)	12.30 (.484)	10.70 (.421)
9	87438-0932	87438-0933	14.80 (.582)	12.00 (.472)	14.20 (.559)	13.80 (.543)	12.20 (.480)
10	87438-1032	87438-1033	16.30 (.641)	13.50 (.531)	15.70 (.618)	15.30 (.602)	13.70 (.539)
11	87438-1132	87438-1133	17.80 (.700)	15.00 (.590)	17.20 (.677)	16.80 (.661)	15.20 (.598)
12	87438-1232	87438-1233	19.30 (.759)	16.50 (.649)	18.70 (.736)	18.30 (.720)	16.70 (.657)
13	87438-1332	87438-1333	20.80 (.818)	18.00 (.708)	20.20 (.795)	19.80 (.779)	18.20 (.716)
14	87438-1432	87438-1433	22.30 (.877)	19.50 (.767)	21.70 (.854)	21.30 (.838)	19.70 (.775)
15	87438-1532	87438-1533	23.80 (.937)	21.00 (.826)	23.20 (.913)	22.80 (.897)	21.20 (.834)